US00D937252S

(12) United States Design Patent

Murphy

(10) Patent No.: US D937,252 S
(45) Date of Patent: ** Nov. 30, 2021

(54) **HINGED CONNECTION APPARATUS**

(71) Applicant: **Johnny Rhymes with Connie, LLC**, Roseville, MN (US)

(72) Inventor: **John A. Murphy**, Roseville, MN (US)

(73) Assignee: **Johnny Rhymes with Connie, LLC**, Roseville, MN (US)

(**) Term: **15 Years**

(21) Appl. No.: **29/701,158**

(22) Filed: **Aug. 8, 2019**

(51) **LOC (13) Cl.** **14-03**

(52) **U.S. Cl.**
USPC **D14/253**

(58) **Field of Classification Search**
USPC D14/217, 251–253, 447, 452, 432–434, D14/440; D12/415; D3/218; D8/349,
(Continued)

(56) **References Cited**

U.S. PATENT DOCUMENTS

1,689,787 A 10/1928 Kupferschmid
6,266,685 B1 7/2001 Danielson et al.
(Continued)

FOREIGN PATENT DOCUMENTS

CN 208424450 U 1/2019
WO 2017120231 A1 7/2017

OTHER PUBLICATIONS

Flygrip, Inc.; Flygrip; product launched summer 2011; accessed Aug. 27, 2012, at http://flygrip.com/.
(Continued)

Primary Examiner — Catherine R Oliver-Garcia
(74) *Attorney, Agent, or Firm* — Grumbles Law, PLLC; Brittany Nanzig

(57) **CLAIM**

The ornamental design for an hinged connection apparatus, as shown and described.

DESCRIPTION

FIG. **1** is a top perspective view of a hinged connection apparatus showing our new design.
FIG. **2** is a top plan view of the hinged connection apparatus.
FIG. **3** is a front elevational view of the hinged connection apparatus; the back elevational view is a mirror image of the front elevational view.
FIG. **4** is a right side view of the hinged connection apparatus; the left side view is a mirror image of the right side view.
FIG. **5** is a bottom plan view of the hinged connection apparatus.
FIG. **6** is a top plan view of the hinged connection apparatus shown in use on a mobile device.
FIG. **7** is a top perspective view of the hinged connection apparatus shown in use on a mobile device.
FIG. **8** is a left side view of the hinged connection apparatus shown in use on a mobile device.
FIG. **9** is a right side view of the hinged connection apparatus shown in an alternate position.
FIG. **10** is a top perspective view of the hinged connection apparatus shown in an alternate position.
FIG. **11** is a right side view of the hinged connection apparatus shown in an alternate position and in use on a mobile device that is in portrait orientation.
FIG. **12** is a left side perspective view of the hinged connection apparatus shown in an alternate position and in use on a mobile device that is in portrait orientation.
FIG. **13** is a right side perspective view of the hinged connection apparatus shown in an alternate position and in use on a mobile device that is in landscape orientation.
FIG. **14** is a top plan view of the hinged connection apparatus shown in use on a mobile device that is located in a pocket; and,
FIG. **15** is a top plan view of the hinged connection apparatus shown in use on a mobile device and securing headphones.
(Continued)

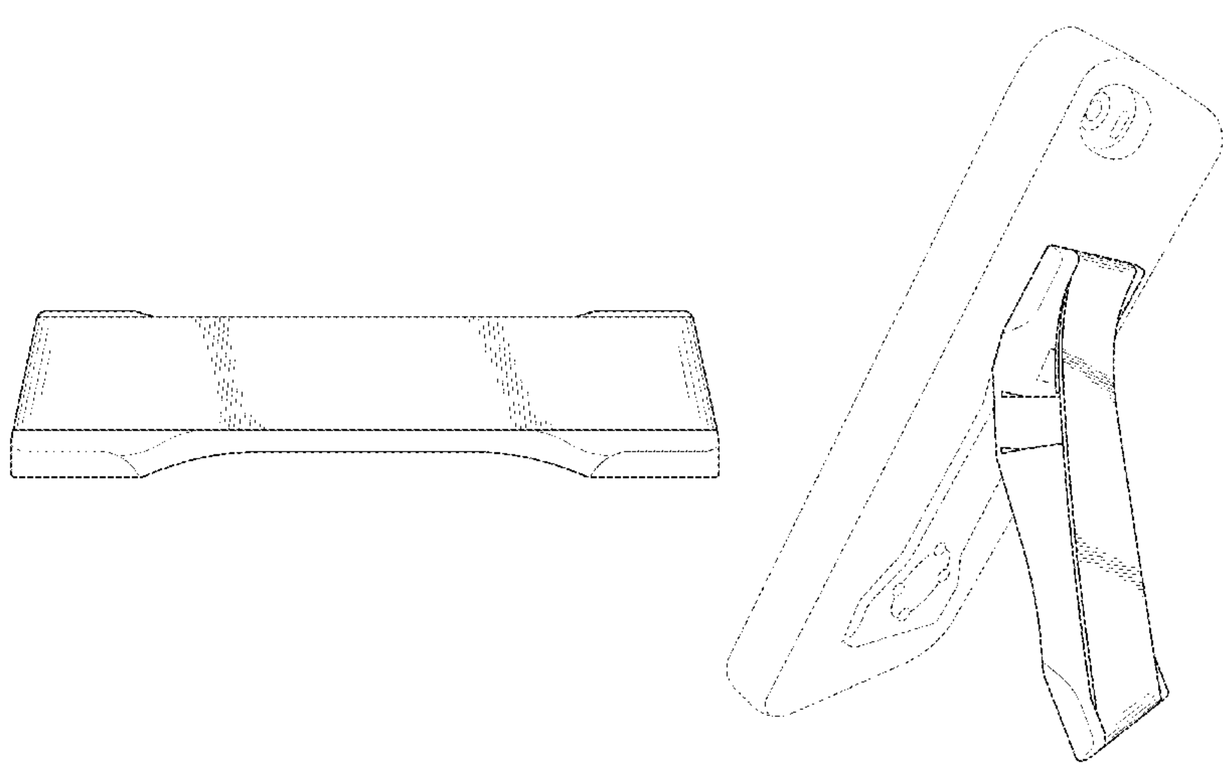

The broken lines in the drawings are for the purposes of illustrating the environment and form no part of the claimed design.

1 Claim, 11 Drawing Sheets

(58) **Field of Classification Search**
USPC D8/363, 394–396; D16/242–244; 248/176.3
CPC H04M 1/02; H04M 1/04; B60R 11/02; F16M 11/00; F16M 11/04; F16M 11/06; F16M 13/02; F16M 13/00; H05K 7/00; H05K 5/02; A47G 1/07
See application file for complete search history.

(56) **References Cited**

U.S. PATENT DOCUMENTS

6,360,928	B1	3/2002	Russo	
6,397,046	B1	5/2002	Kfoury	
7,464,814	B2	12/2008	Carnevali	
7,780,047	B2	8/2010	Chen et al.	
D633,504	S	3/2011	Alexander, Jr.	
D642,579	S	8/2011	Deutsch et al.	
D673,162	S	12/2012	Young	
8,428,664	B1	4/2013	Wyers	
D689,479	S	9/2013	Soffer	
D716,287	S	10/2014	Ambriz	
8,885,338	B1	11/2014	Simpson et al.	
D721,373	S	1/2015	Logereau	
8,939,483	B2	1/2015	Kim	
8,950,638	B2	2/2015	Wangercyn, Jr. et al.	
8,973,795	B2	3/2015	Chiu, Jr. et al.	
9,027,808	B2	5/2015	Kim	
D735,695	S	8/2015	Murphy	
9,204,710	B1	12/2015	Burns et al.	
9,259,077	B2	2/2016	Murphy et al.	
9,407,743	B1 *	8/2016	Hirshberg	F16M 13/00
9,954,569	B2	4/2018	Murphy et al.	
D842,290	S *	3/2019	Robertson	D14/250
D883,272	S *	5/2020	Park	D14/253
D894,889	S *	9/2020	Feller	D14/251
D894,890	S *	9/2020	Lederer	D14/253
D896,805	S *	9/2020	Stagge	D14/253
D905,040	S *	12/2020	Altschul	A45F 5/10 D14/251
D916,073	S *	4/2021	Li	D14/253
2003/0066856	A1	4/2003	Lehtonen	
2004/0013279	A1	1/2004	Takeda	
2005/0205623	A1	9/2005	Buntain	
2006/0054704	A1	3/2006	Fitch et al.	
2008/0083797	A1	4/2008	Myers	
2008/0203127	A1	8/2008	Castillo-Garrison	
2009/0090750	A1	4/2009	Alcenat	
2009/0321483	A1	12/2009	Froloff	
2010/0116387	A1	5/2010	Channey et al.	
2010/0171021	A1	7/2010	Smith	
2010/0222118	A1	9/2010	Interdanato	
2010/0264182	A1	10/2010	Perlman et al.	
2011/0034221	A1	2/2011	Hung et al.	
2012/0006950	A1 *	1/2012	Vandiver	F16M 13/00 248/176.3
2012/0063066	A1	3/2012	Floit	
2012/0299318	A1	11/2012	Murphy et al.	
2012/0319414	A1	12/2012	Potter et al.	
2013/0009413	A1	1/2013	Chiu, Jr. et al.	
2014/0015034	A1	1/2014	Ryu et al.	
2014/0054910	A1	2/2014	Kim	
2014/0062885	A1	3/2014	Parker	
2014/0151249	A1	6/2014	Grimm et al.	
2014/0151417	A1	6/2014	Gayler	
2014/0159403	A1	6/2014	Kim	
2014/0202886	A1	7/2014	Kim	
2014/0217135	A1	8/2014	Murphy et al.	
2014/0231276	A1	8/2014	Jung	
2015/0092346	A1	4/2015	Ben et al.	
2015/0365125	A1	12/2015	Murphy et al.	
2016/0134733	A1	5/2016	Murphy et al.	
2016/0286944	A1	10/2016	Snyder	
2019/0195417	A1 *	6/2019	Kwasniewski	B60R 11/02
2019/0245572	A1	8/2019	Otmani et al.	

OTHER PUBLICATIONS

Scott Paul Technologies; CellHandle Innovative Phone Accessory; CellHandle; May 16, 2011; accessed Aug. 27, 2012, at http://www.scottpaultech.com/index.html.

Kernelope Enterprises, LLC; Lazy-Hands Thumbs-Free Grip for Mobile Devices; May 2011; access Aug. 27, 2012, at http://www.lazy-hands.com/.

Stephen A Vu; Non-Final Office Action for U.S. Appl. No. 13/481,581; USPTO Communication; dated Jan. 24, 2013.

Corey Nelson Skurdal; Non-Final Office Action for U.S. Appl. No. 14/251,146; USPTO Communication dated Sep. 25, 2014.

Corey Nelson Skurdal; Final Office Action for U.S. Appl. No. 14/251,146; USPTO Communication; dated Mar. 26, 2015.

Blaine R. Copenheaver; International Preliminary Report on Patentability for PCT/US17/12183; IB Communication; dated Mar. 17, 2107, 14 pp.

International Search Report and Written Opinion pertaining to PCT/US2020/053702, dated Dec. 7, 2020.

Certificate of Registration for corresponding UK Design 6082861, dated Feb. 7, 2020.

* cited by examiner

Figure 1

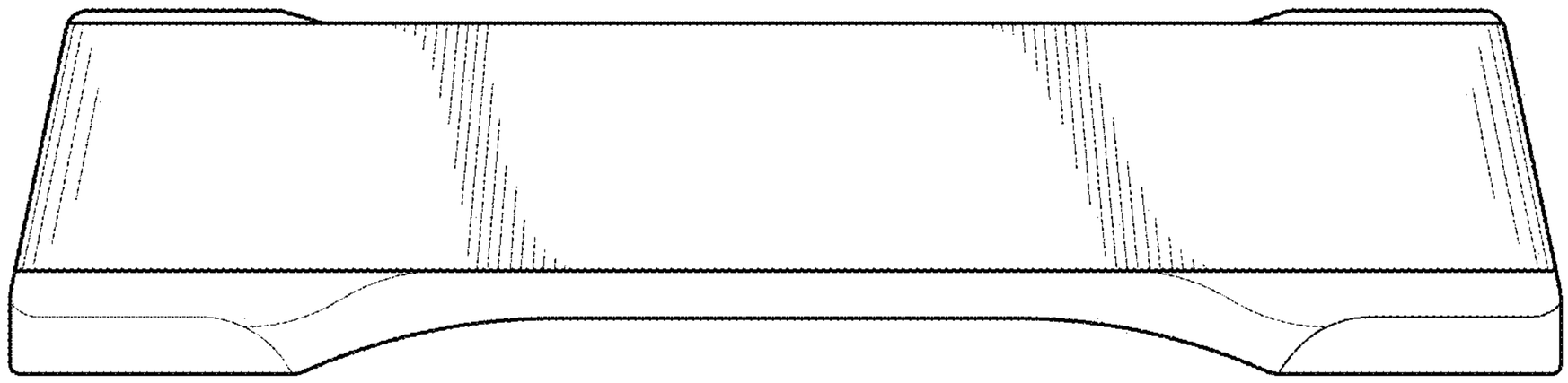

Figure 2

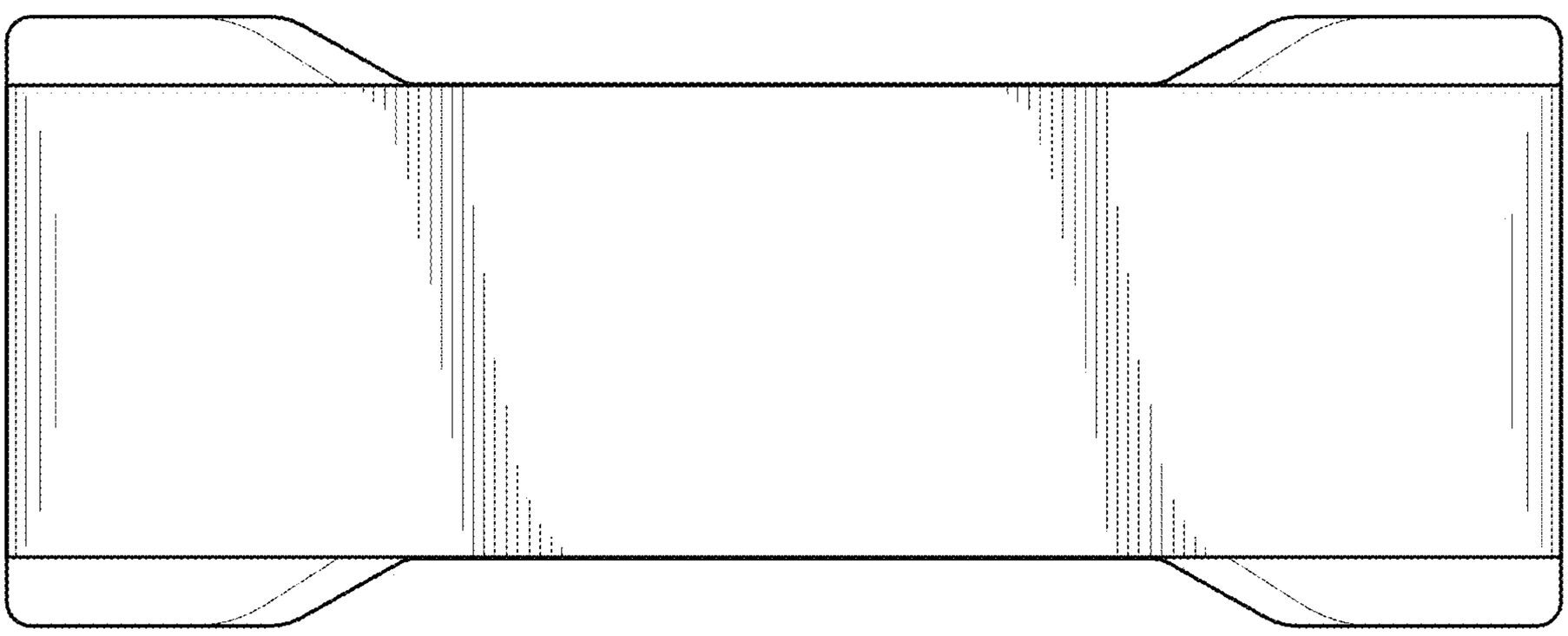

Figure 3

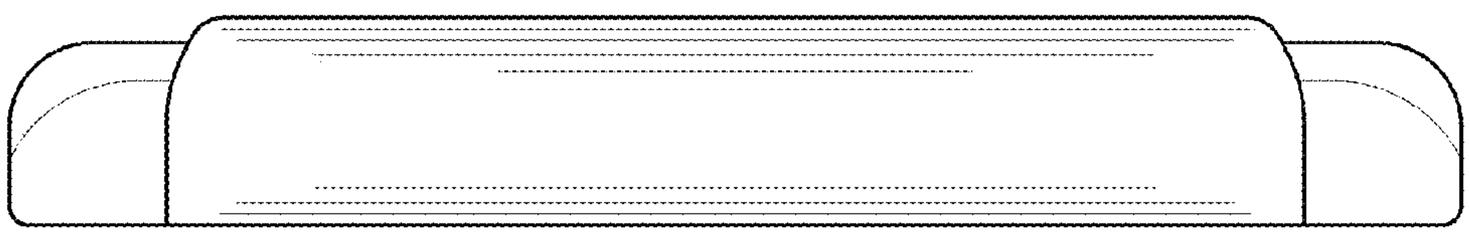

Figure 4

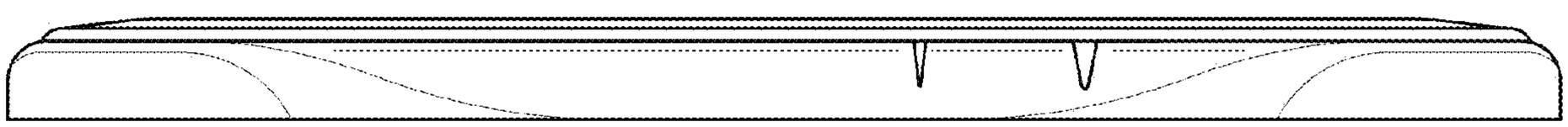

Figure 5

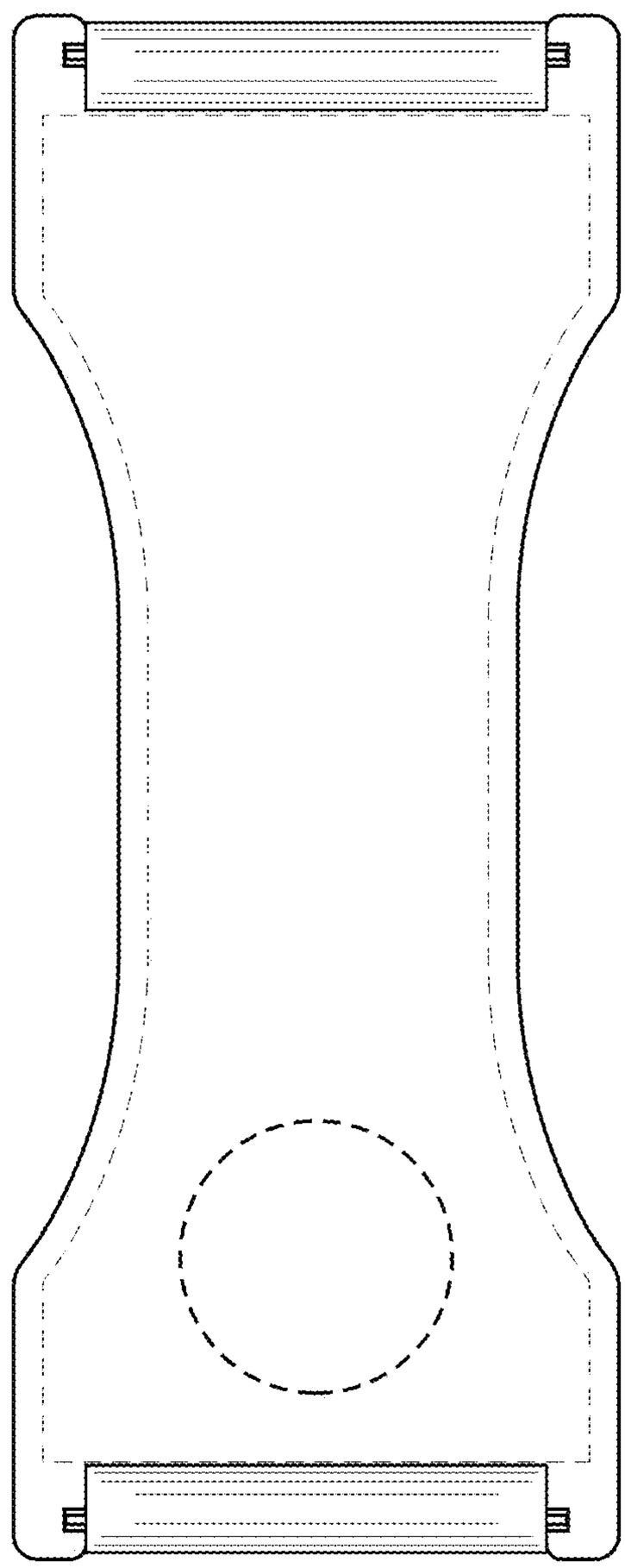

Figure 6

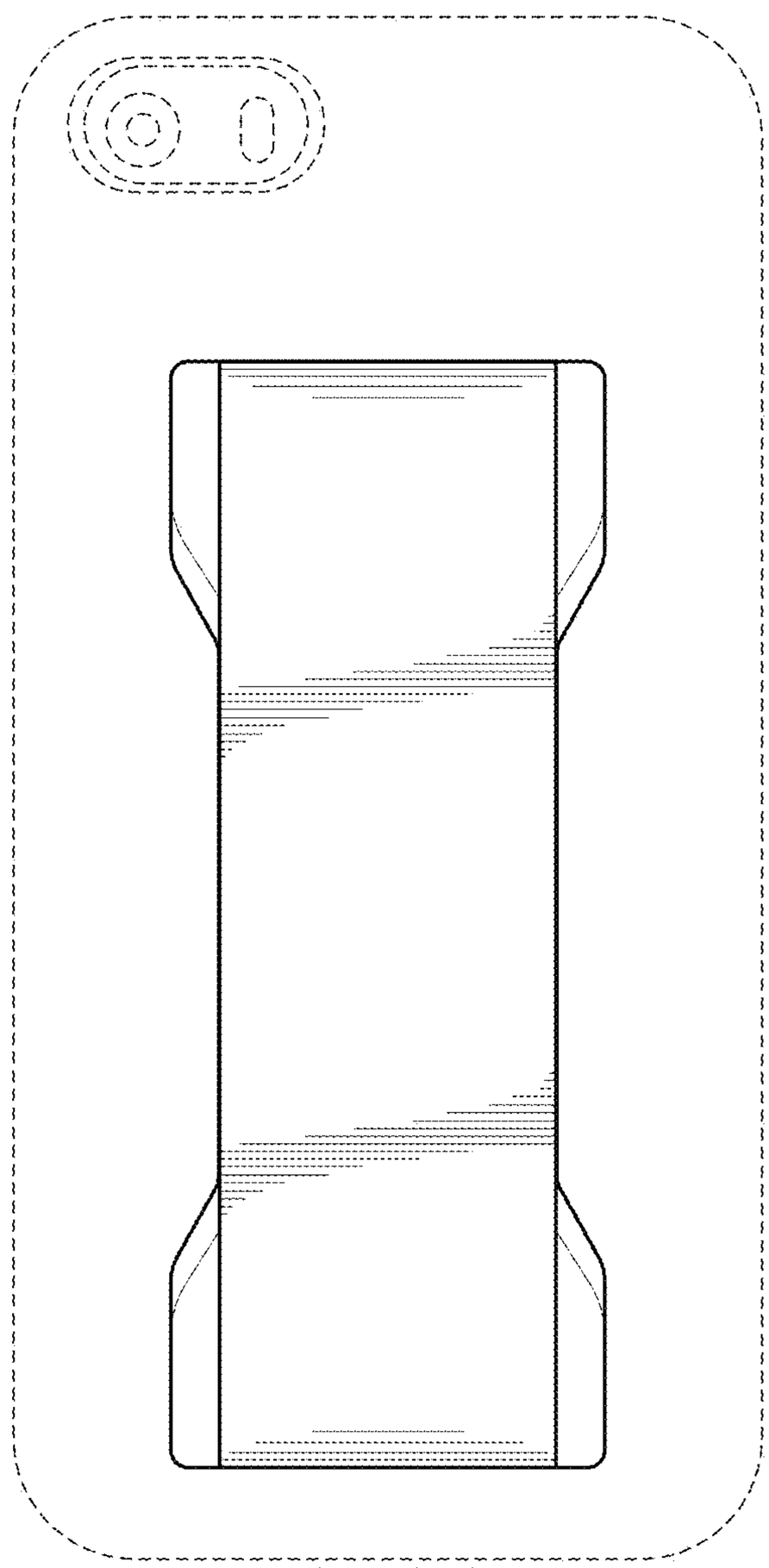

Figure 7

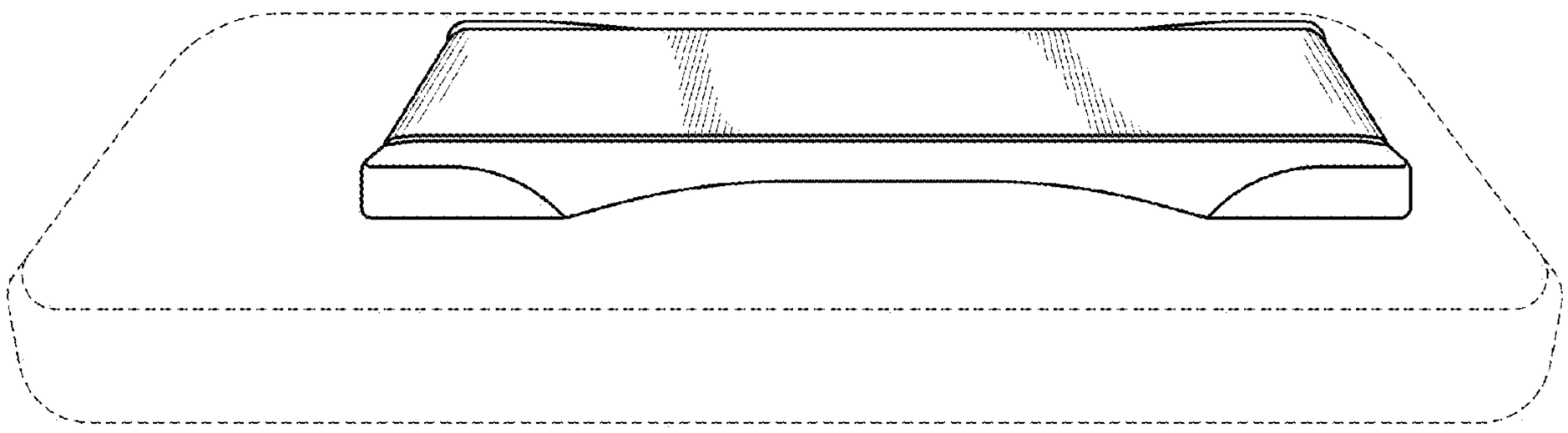

Figure 8

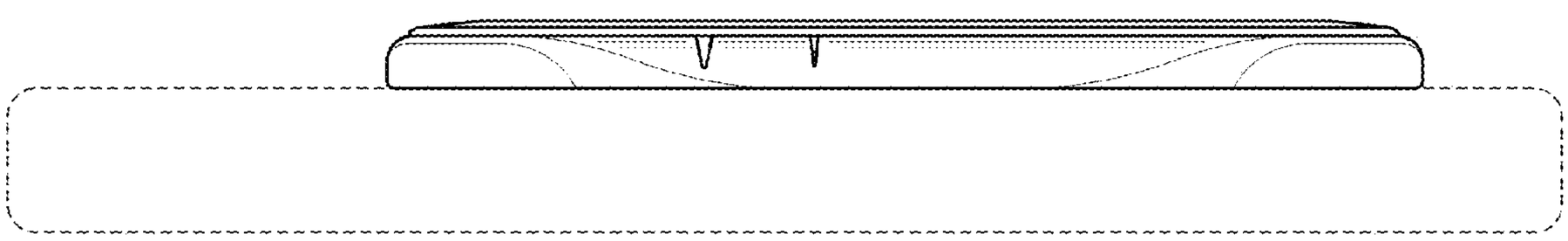

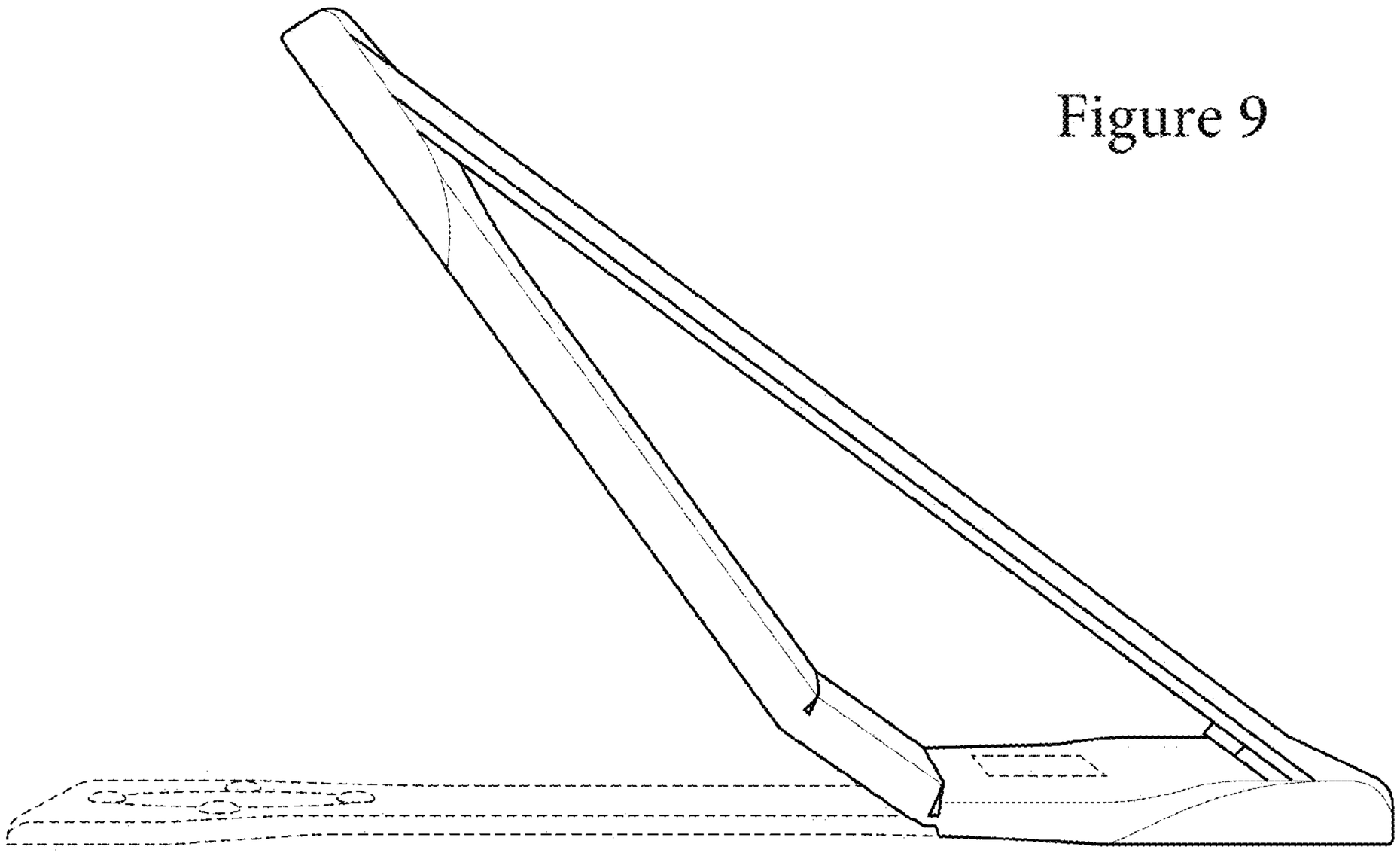

Figure 9

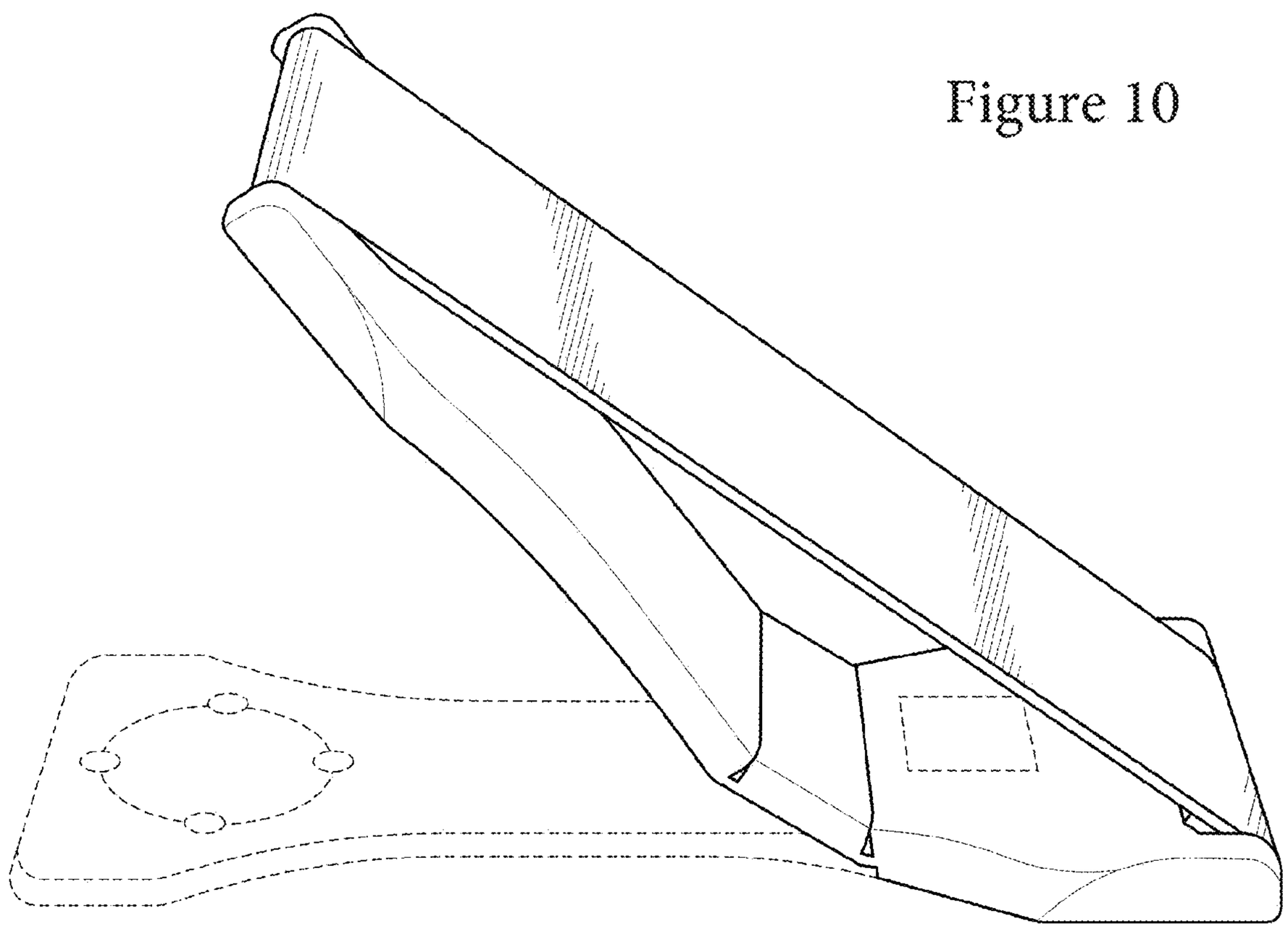

Figure 10

Figure 11

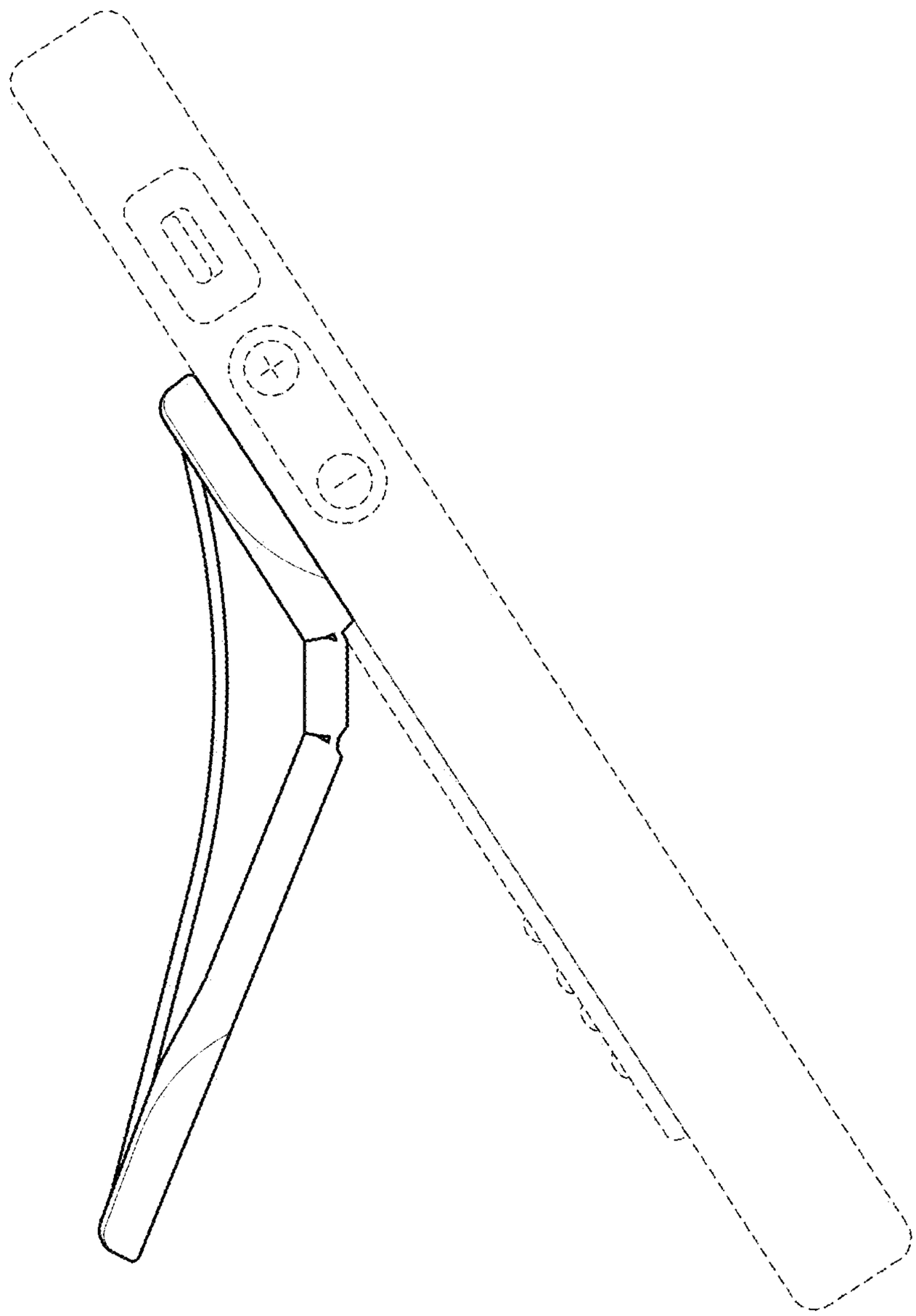

Figure 12

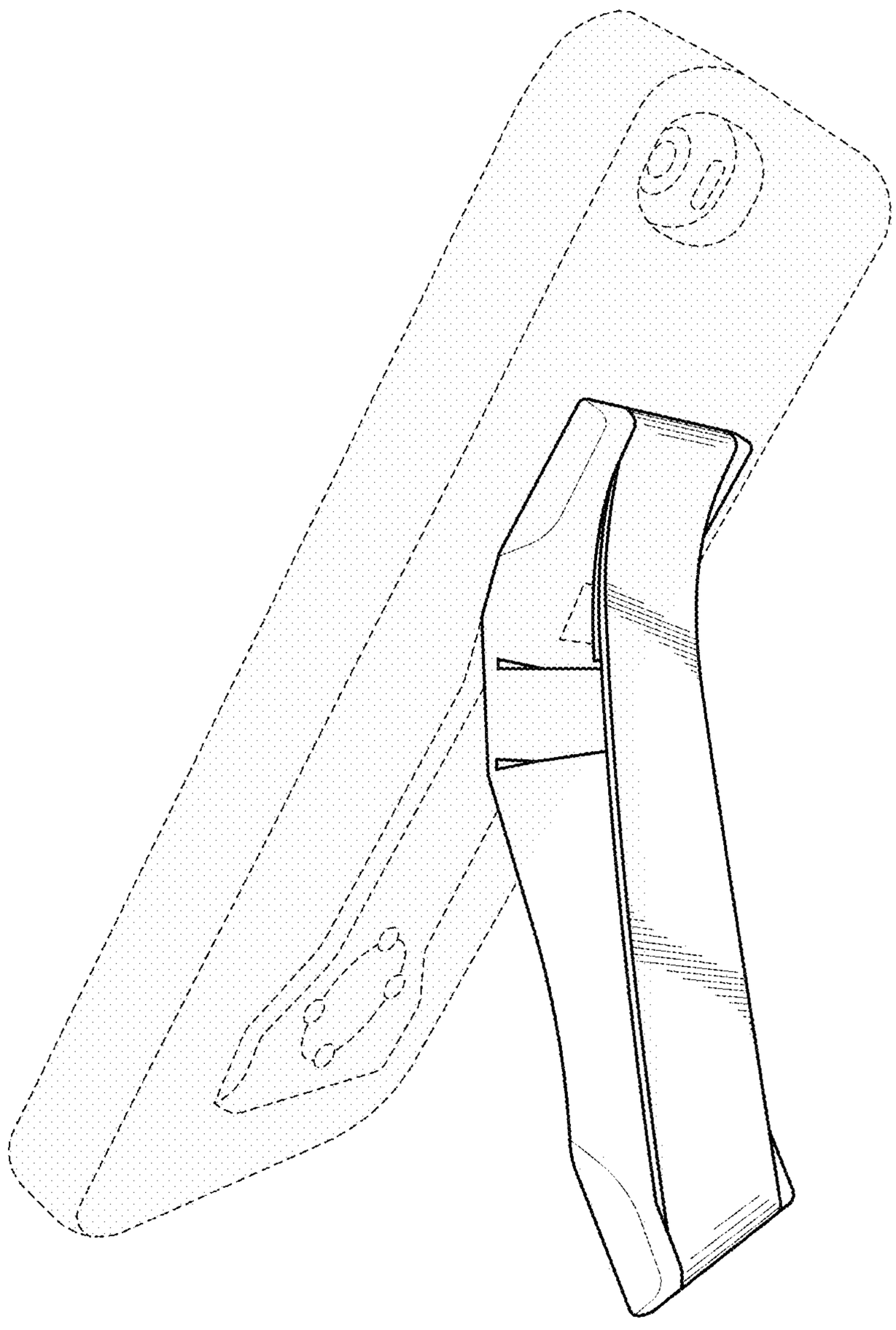

Figure 13

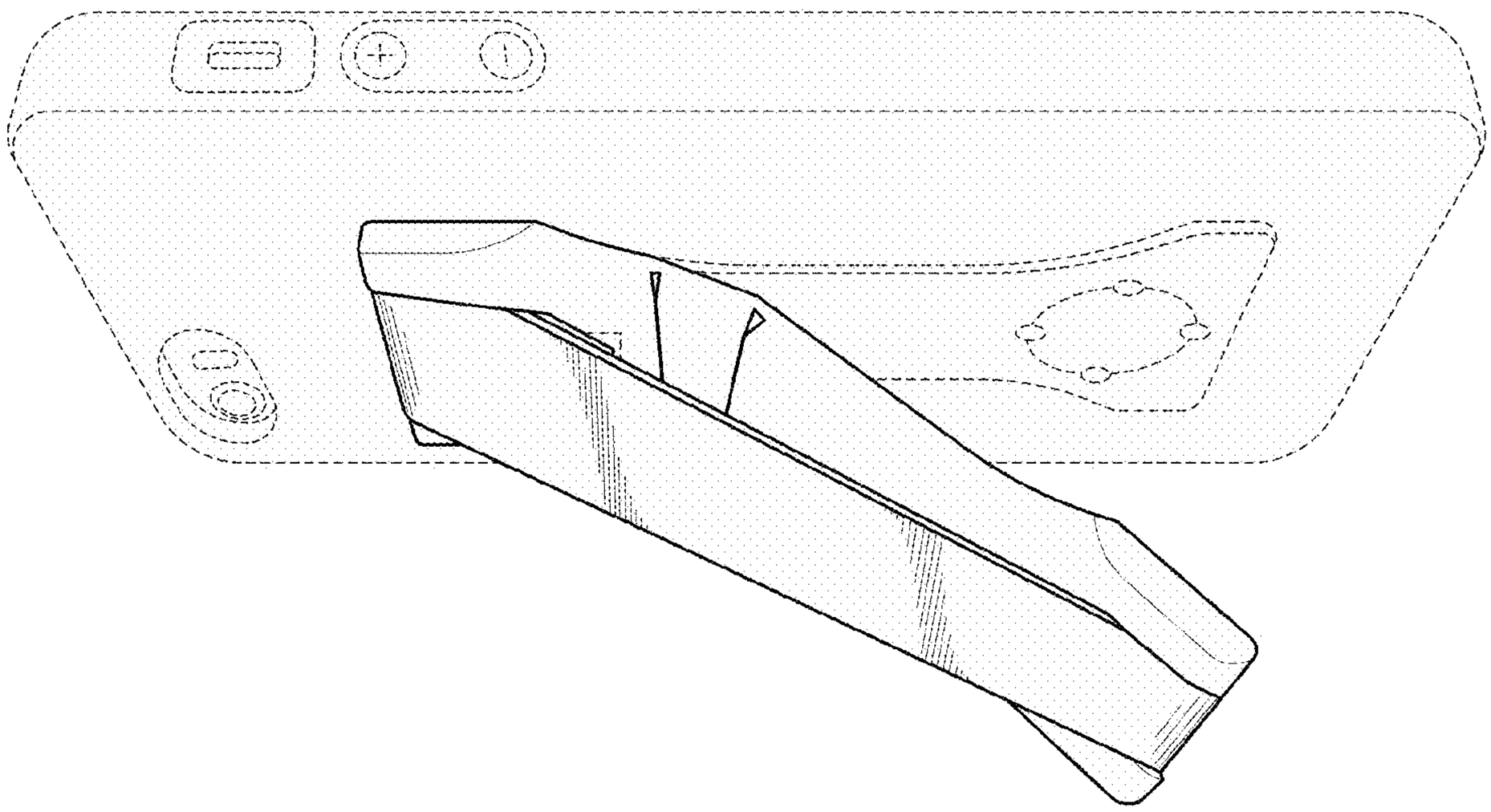

Figure 14

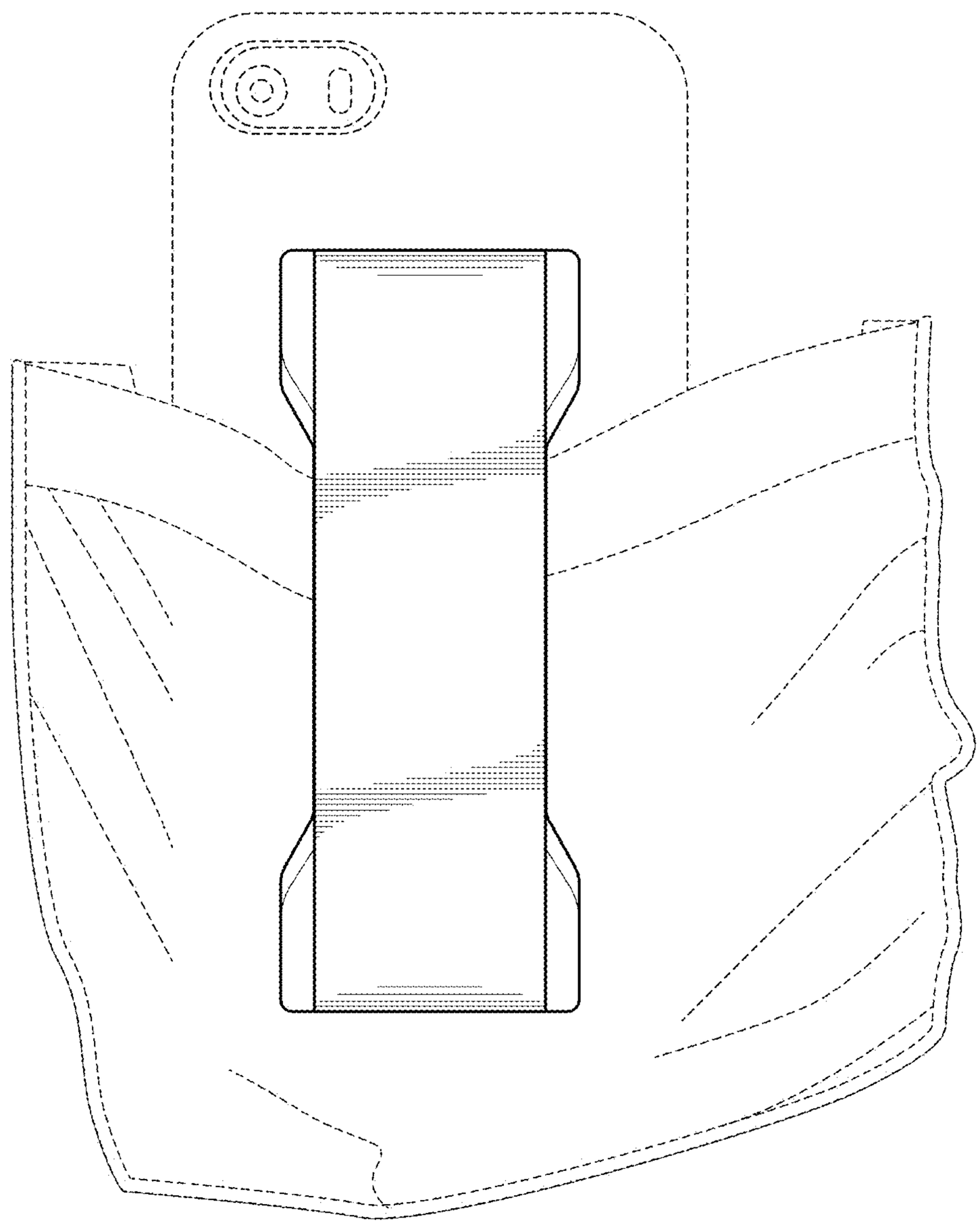
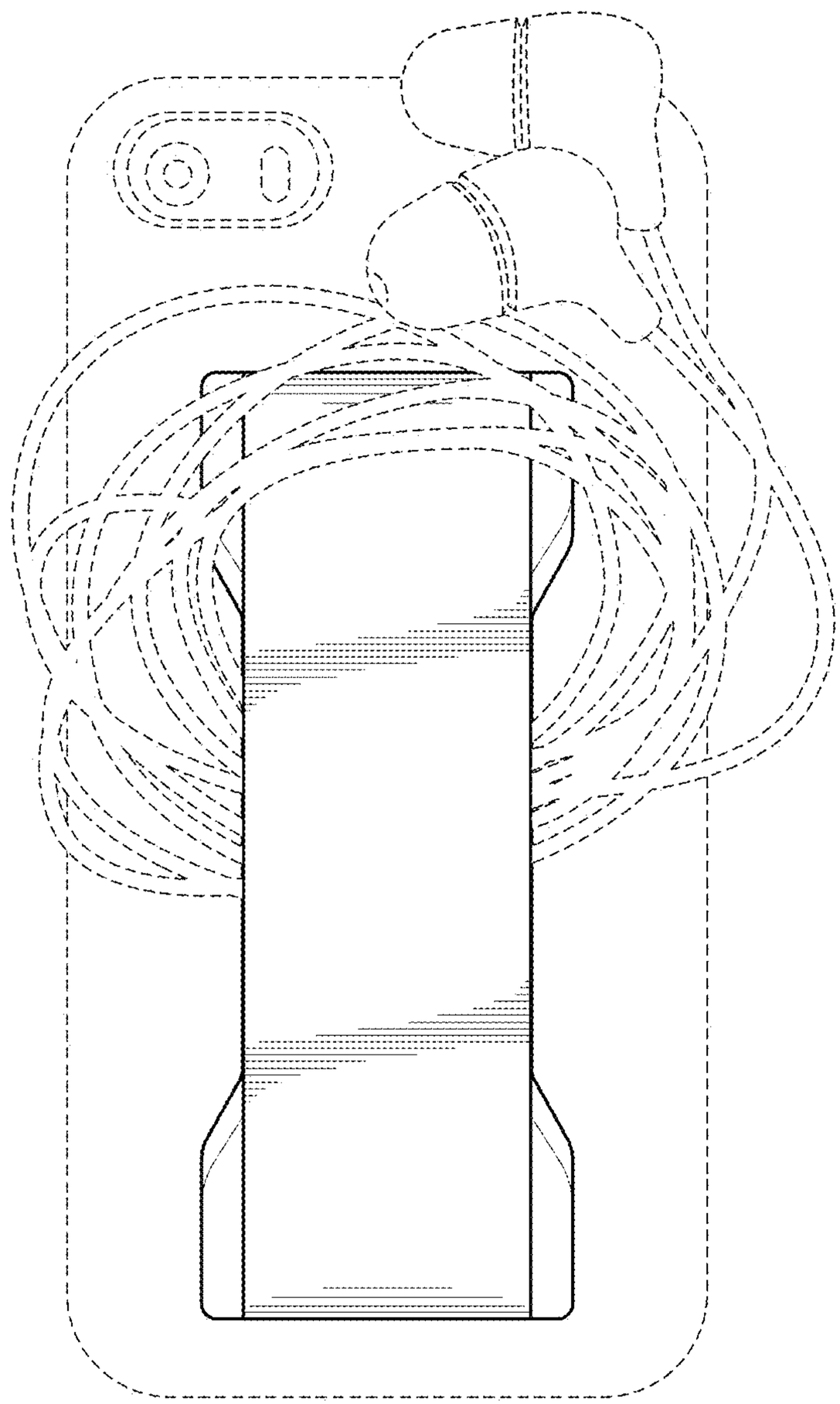
Figure 15