US00D936785S

(12) United States Design Patent
Vaughan

(10) Patent No.: US D936,785 S
(45) Date of Patent: ** Nov. 23, 2021

(54) **ADAPTER FOR A LIQUID SPRAY NOZZLE**

(71) Applicant: **The Fountainhead Group, Inc.**, New York Mills, NY (US)

(72) Inventor: **John Vaughan**, Waterville, NY (US)

(73) Assignee: **The Fountainhead Group, Inc.**, New York Mills, NY (US)

(**) Term: **15 Years**

(21) Appl. No.: **29/682,440**

(22) Filed: **Mar. 5, 2019**

(51) **LOC (13) Cl.** **23-01**

(52) **U.S. Cl.**
USPC **D23/213**

(58) **Field of Classification Search**
USPC D23/209, 213, 223, 226, 249, 259, 260, D23/365
CPC .. B01D 35/143; B01D 27/103; B01D 35/306; B01D 35/1475; B01D 2201/304; B01D 27/10; B01D 27/106
See application file for complete search history.

(56) **References Cited**

U.S. PATENT DOCUMENTS

D221,651 S * 8/1971 Napper D23/259
D229,496 S * 12/1973 Hand D23/262
4,827,539 A * 5/1989 Kiziah E03D 11/16 285/303
4,899,938 A * 2/1990 Havrilla, Jr. B05B 7/0815 239/294
D319,291 S * 8/1991 Hanzel D23/212
D349,758 S * 8/1994 Hallbach D23/259
D364,916 S * 12/1995 Hallbach D23/259
D396,730 S * 8/1998 Schaupp D23/259
5,799,364 A * 9/1998 Foisy A47L 5/24 15/338
D402,354 S * 12/1998 Strong D23/259
5,996,134 A * 12/1999 Senninger ..... E03D 11/16 138/96 R
D418,590 S * 1/2000 Tracy D23/213
D439,636 S * 3/2001 Hamilton D23/213
6,435,567 B2 * 8/2002 Kikumori F16L 25/0036 285/319
D462,256 S * 9/2002 Jaynes D12/160
6,499,771 B1 * 12/2002 Snyder, Sr. F16L 37/0915 285/319
D574,931 S * 8/2008 Hughes D23/262
D595,420 S * 6/2009 Suzuki D24/227
D595,421 S * 6/2009 Suzuki D24/227
(Continued)

OTHER PUBLICATIONS

https://www.amazon.com/Gardena-02818-20-Spray-Nozzle-Profi-System-Maxi-Flow/ (Year: 2020).*
(Continued)

Primary Examiner — Jack Reickel
Assistant Examiner — Keith J Wilson
(74) *Attorney, Agent, or Firm* — Bond Schoeneck & King, PLLC; George McGuire

(57) **CLAIM**

The ornamental design for an adapter for a liquid spray nozzle, as shown and described.

DESCRIPTION

FIG. **1** is a perspective view of a new and ornamental design for an adapter for a liquid spray nozzle;
FIG. **2** is a top plan view thereof;
FIG. **3** is a bottom plan view thereof;
FIG. **4** is a first side elevation view thereof;
FIG. **5** is a second side elevation view thereof;
FIG. **6** is a front elevation view thereof; and,
FIG. **7** is a rear elevation view thereof.
The broken lines in FIGS. **6** and **7** are for environmental purposes only and do not form any part of the claimed design.

1 Claim, 7 Drawing Sheets

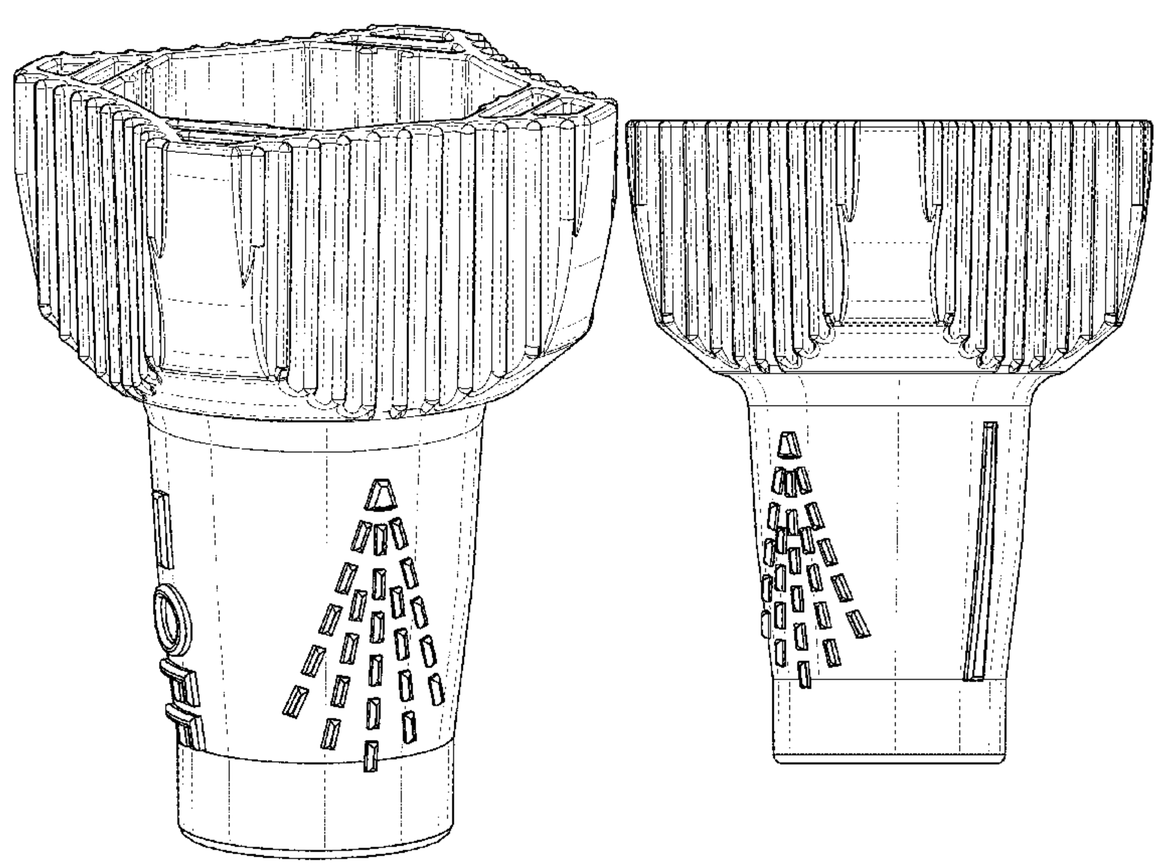

(56) **References Cited**

U.S. PATENT DOCUMENTS

D595,863 S * 7/2009 Suzuki D24/227
D613,827 S * 4/2010 Damaske D23/259
D627,432 S * 11/2010 Escoto, Jr. B05B 7/066 D23/213
D638,104 S * 5/2011 Govoni D23/262
D646,762 S * 10/2011 Terry D23/259
D670,786 S * 11/2012 Mauchle D23/213
8,474,878 B2 * 7/2013 Richter F16B 2/246 285/319
D689,590 S * 9/2013 Brose D23/213
D704,312 S * 5/2014 Kuo D23/259
D704,799 S * 5/2014 Crawley D23/213
D717,405 S * 11/2014 Coronado D23/259
D717,406 S * 11/2014 Stanley D23/259
8,910,677 B1 * 12/2014 Carpenter B60K 15/04 141/312
D737,410 S * 8/2015 Wyne D23/259
D738,470 S * 9/2015 Eaton F16L 21/08 D23/259
D782,621 S * 3/2017 Smith D23/259
D784,495 S * 4/2017 Pearson D23/249
9,623,594 B2 * 4/2017 French F16L 21/03
D806,833 S * 1/2018 Pearson D23/249
D812,714 S * 3/2018 Hughes D23/213
D813,355 S * 3/2018 Weatherby D23/259
D815,516 S * 4/2018 Karmarkar D8/382
D816,811 S * 5/2018 Dagdelen D23/259
D817,446 S * 5/2018 Kinzel D23/231
D823,443 S * 7/2018 Bancroft D23/262
D830,522 S * 10/2018 Di Liberto D23/259
D833,581 S * 11/2018 Atwell D23/259
D835,756 S * 12/2018 Auxter D23/249
D836,755 S * 12/2018 Dale D23/259
D844,113 S * 3/2019 Auxter D23/249
D847,309 S * 4/2019 Sugatani D23/259
D849,890 S * 5/2019 Tempel D23/233
D851,220 S * 6/2019 Thompson D23/259
D851,738 S * 6/2019 Ghorbani D23/259
D852,934 S * 7/2019 Habres D23/259
D855,781 S * 8/2019 Delancey D23/259
D857,179 S * 8/2019 Thompson D23/259
D859,604 S * 9/2019 Dagdelen D23/259
D861,054 S * 9/2019 Avila D15/199
D865,919 S * 11/2019 Lippka D23/262
D868,112 S * 11/2019 Tsuji D15/5
D900,283 S * 10/2020 Deschamps D23/249
D914,135 S * 3/2021 Denmat D23/213
2003/0062428 A1 * 4/2003 Baasch F02M 25/00 239/407
2004/0080160 A1 * 4/2004 Rief E04H 4/1654 285/276
2006/0006651 A1 * 1/2006 Watanabe F16L 25/0036 285/247
2007/0228727 A1 * 10/2007 Matsuno F16L 37/0985 285/305
2012/0325335 A1 * 12/2012 Schalkx F16L 37/2445 137/315.01
2014/0327238 A1 * 11/2014 Bowman F16L 21/08 285/112
2014/0338773 A1 * 11/2014 French F16L 37/1225 138/109
2015/0060577 A1 * 3/2015 Kosovich B05B 13/0627 239/587.1
2015/0176728 A1 * 6/2015 Bowman F16L 21/065 285/309
2015/0353340 A1 * 12/2015 Gammon B64D 37/00 141/1
2017/0328500 A1 * 11/2017 Bowman F16L 17/04
2017/0328505 A1 * 11/2017 Sith F16L 37/0915
2017/0334705 A1 * 11/2017 Murugo Perez B67D 7/06
2018/0156362 A1 * 6/2018 Takeda B25B 27/10
2018/0163905 A1 * 6/2018 Ohnemus F16L 21/005
2018/0209567 A1 * 7/2018 Brandt F16L 17/04
2018/0304179 A1 * 10/2018 Auxter B01D 27/06
2018/0326449 A1 * 11/2018 Dale B05C 17/00513

OTHER PUBLICATIONS

POWERTEC 70147 Tapered Adapter Oct. 16, 2017, Amazon.com, Mar. 26, 2021: URL: https://www.amazon.com/POWERTEC-70147-Tapered-Adapter-4-Inch/dp/B00M3J60O6/(Year: 2017).*

5500-PPB-X8 Conejet Adjustable Spray Tip Jun. 24, 2018 Sprayerdepot.com, Mar. 26, 2021: URL:https://www.sprayerdepot.com/products/5500-ppb-x8-conejet-adjustable-spray-tip (Year: 2018).*

* cited by examiner

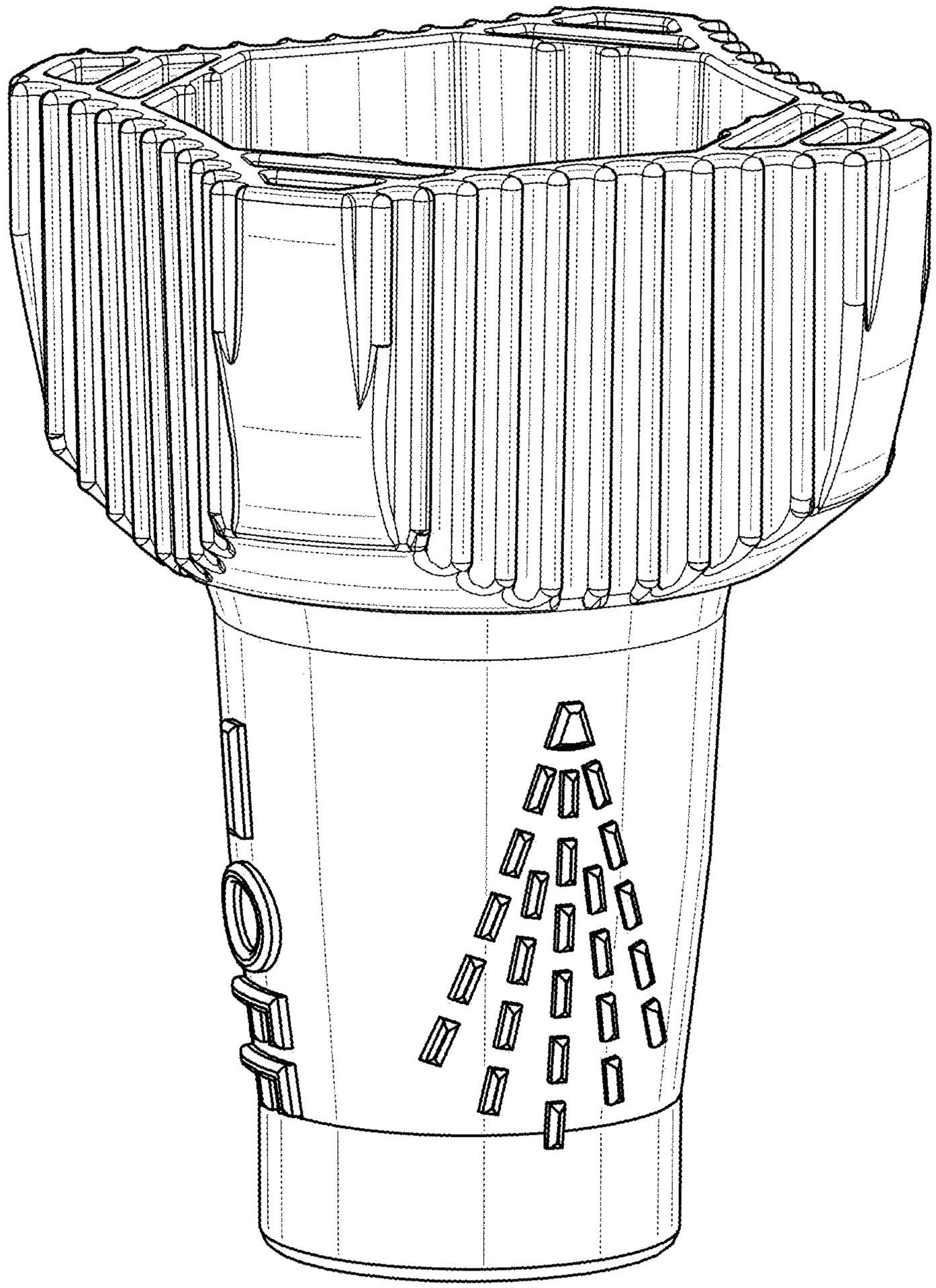

FIG. 1

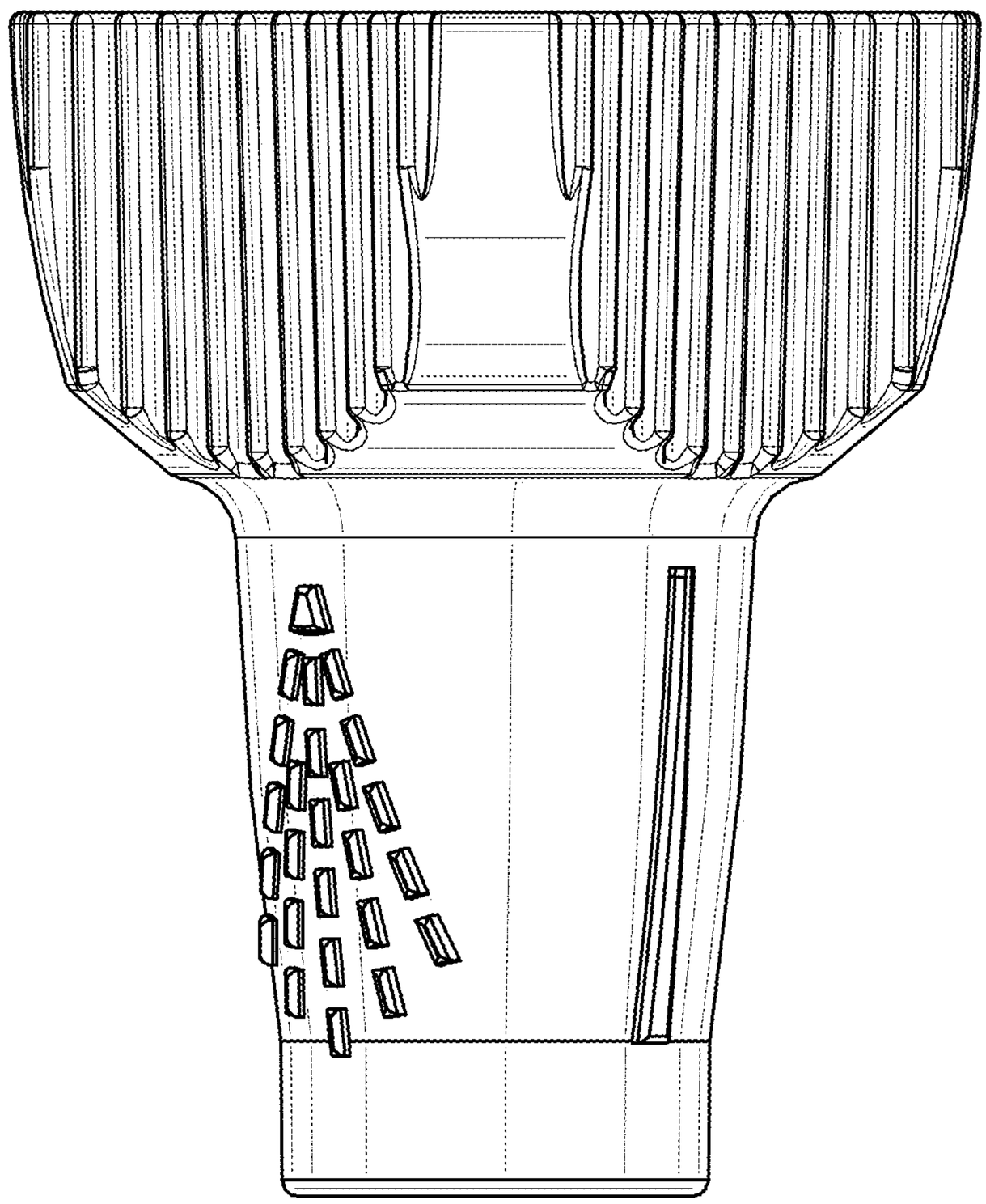

FIG. 2

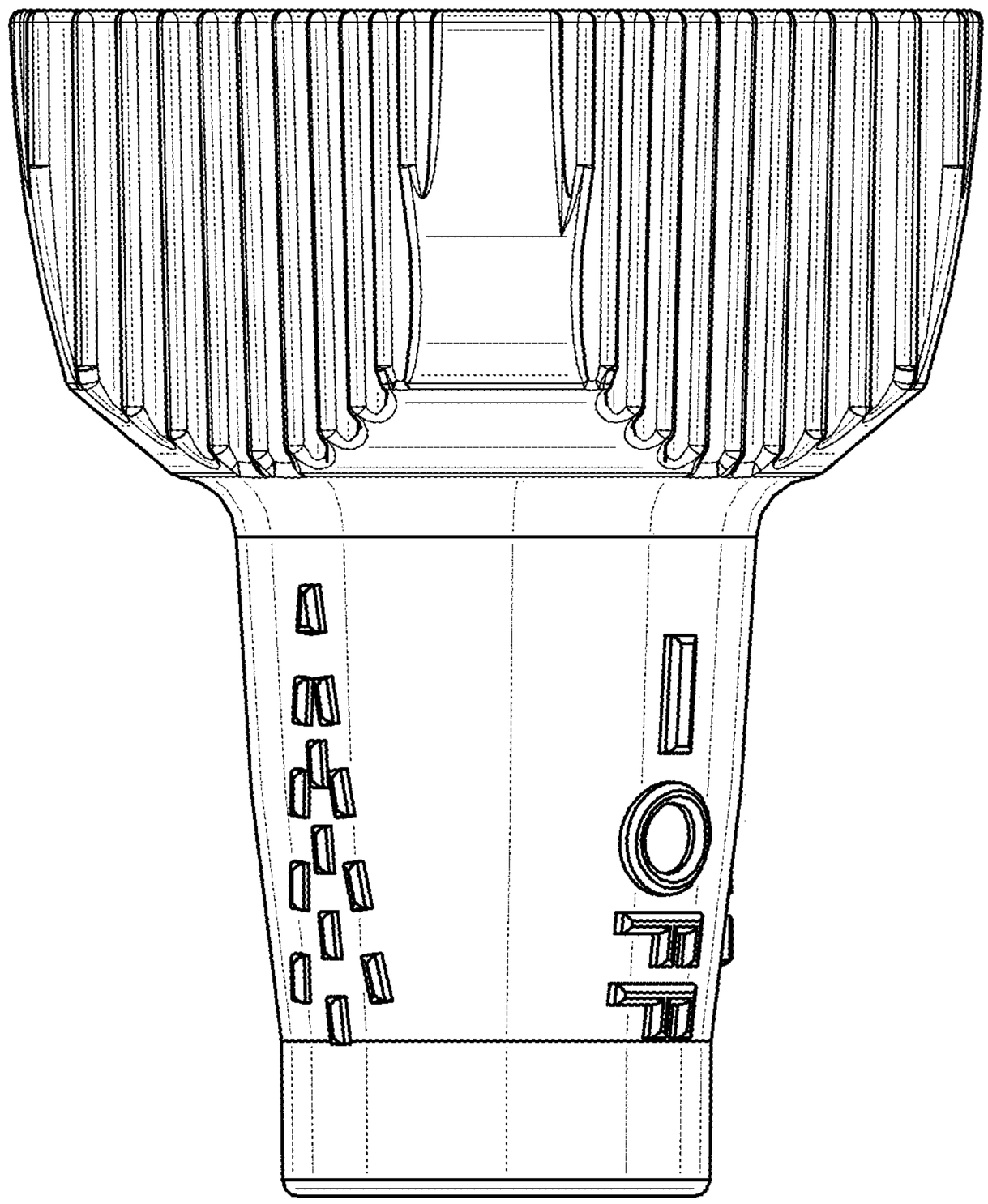

FIG. 3

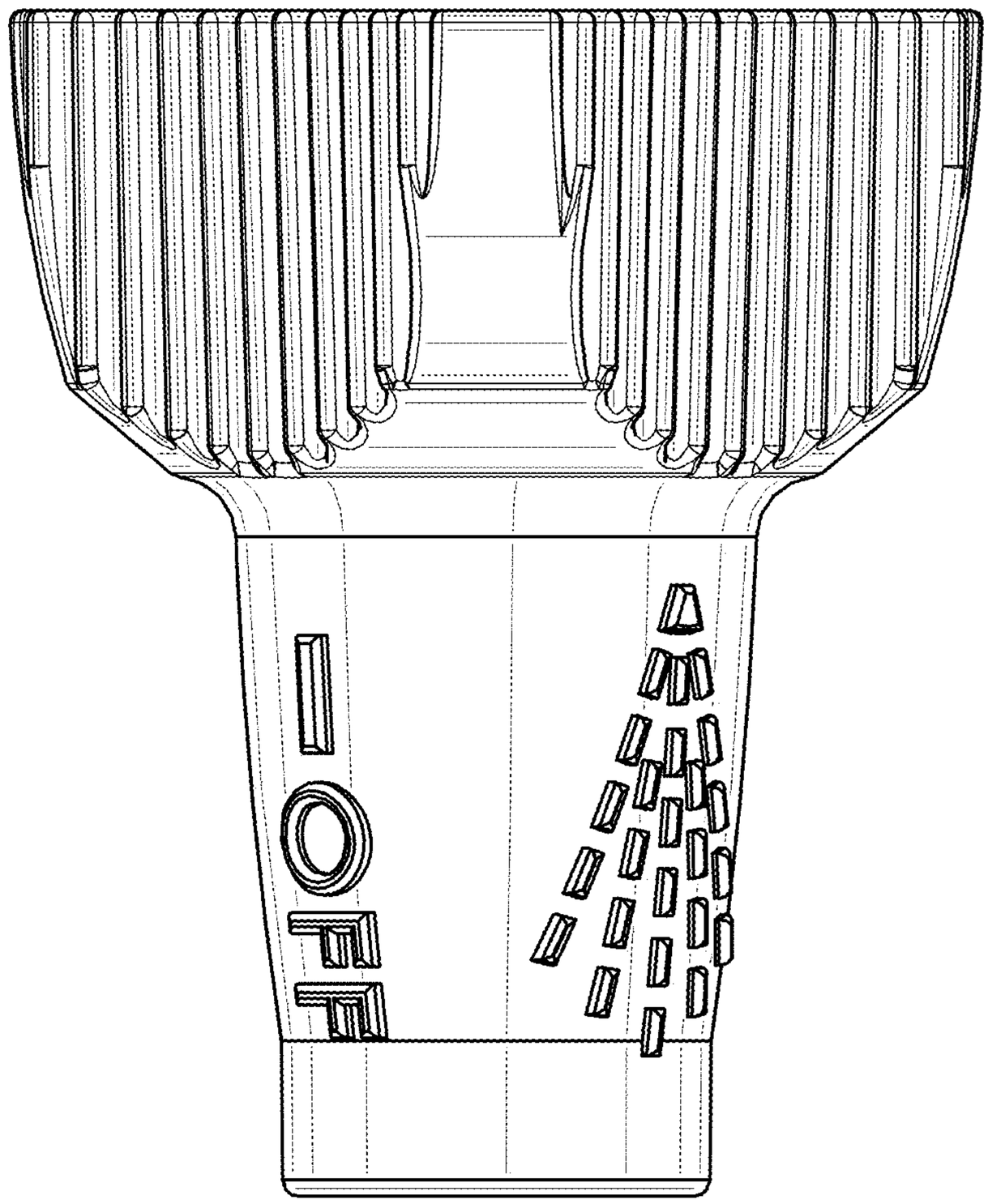

FIG. 4

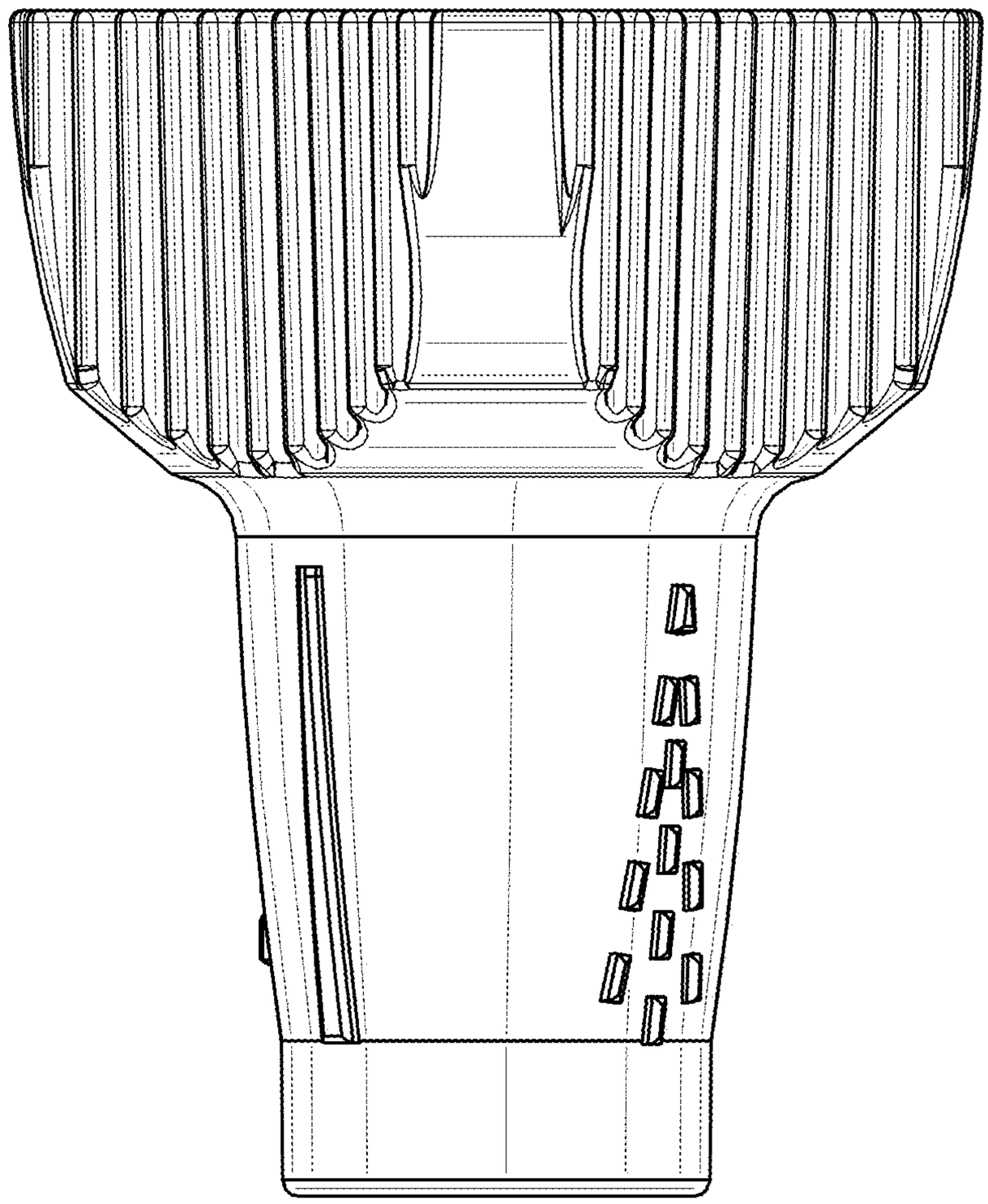

FIG. 5

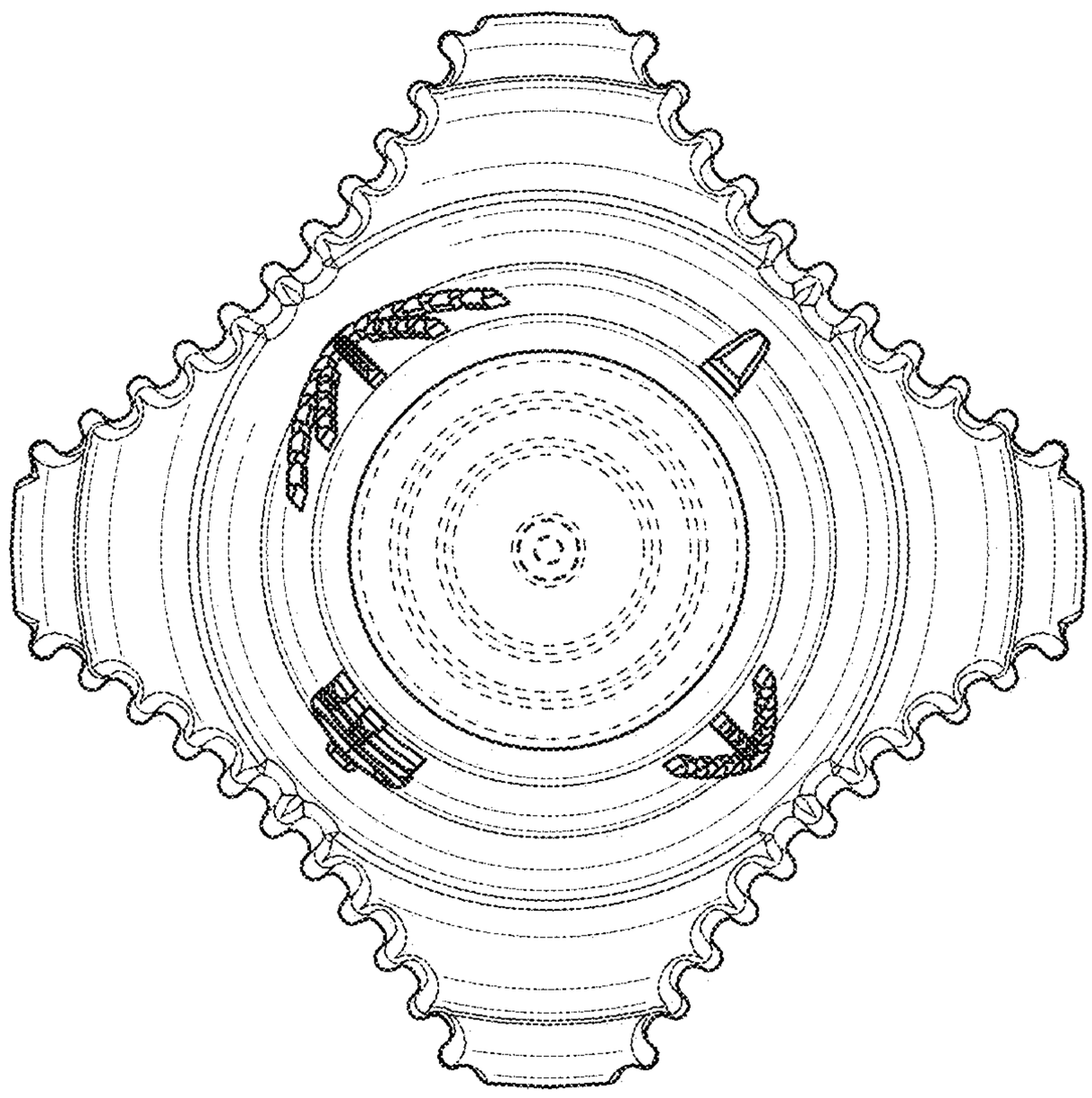

FIG. 6

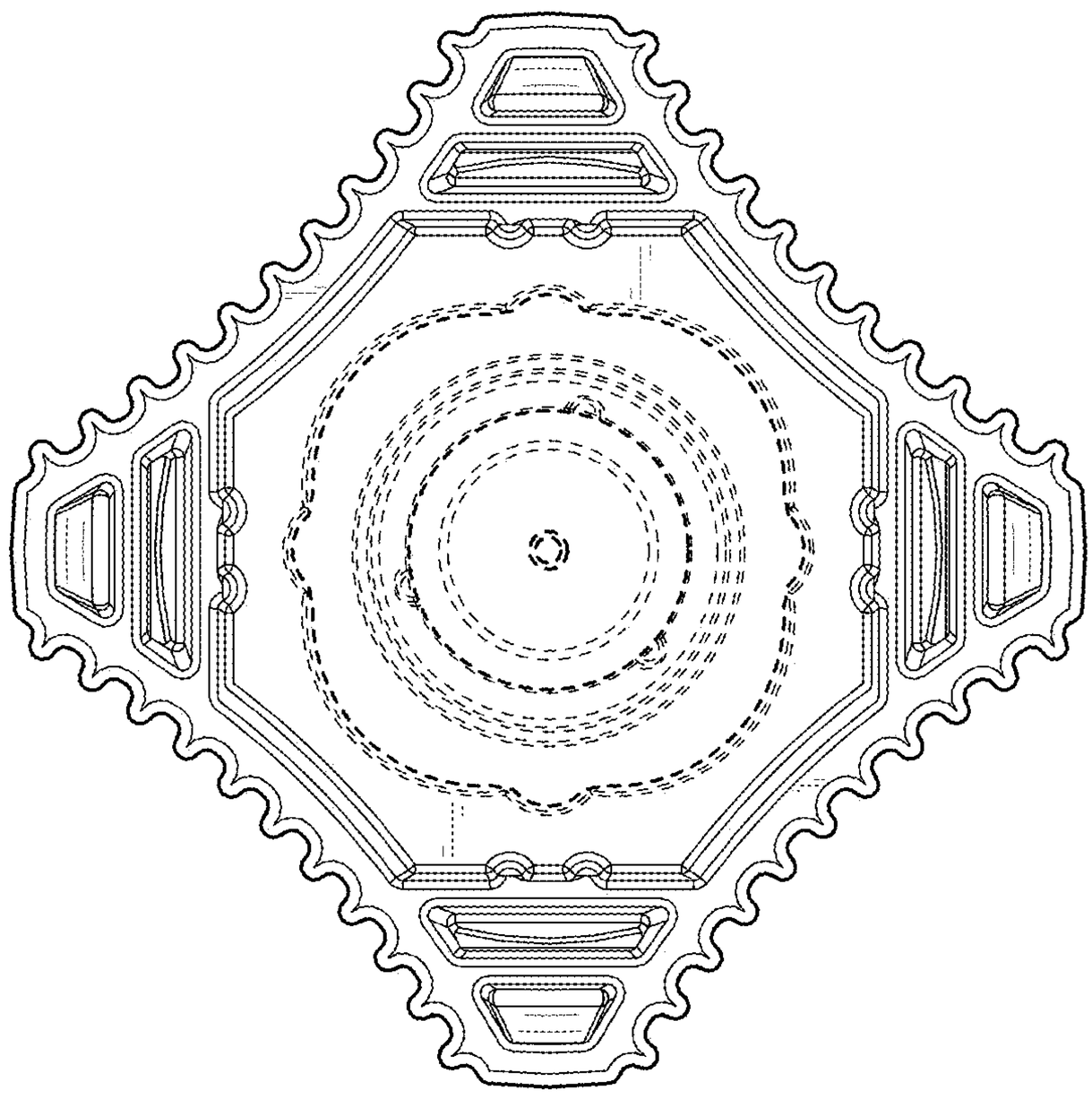

FIG. 7