US00D936615S

(12) United States Design Patent
Wang

(10) Patent No.: US D936,615 S
(45) Date of Patent: ** Nov. 23, 2021

(54) **LIGHT DIMMER SWITCH**

(71) Applicants: **Hangzhou Honyar Electrical Co., Ltd**, Zhejiang (CN); **Crestin LLC**, Milpitas, CA (US)

(72) Inventor: **Micheng Wang**, Zhejiang (CN)

(73) Assignees: **Hangzhou Honyar Electrical Co., Ltd**, Hangzhou (CN); **Crestin LLC**, Milpitas, CA (US)

(**) Term: **15 Years**

(21) Appl. No.: **29/741,669**

(22) Filed: **Jul. 15, 2020**

(51) **LOC (13) Cl.** **13-03**

(52) **U.S. Cl.**
USPC **D13/164**

(58) **Field of Classification Search**
USPC D13/162, 164, 171
CPC .. H01H 9/02; H01H 9/16; H01H 9/18; H01H 9/181; H01H 9/182; H01H 13/04; H01H 13/06; H01H 2009/187; H01H 3/12; H01H 23/02; H01H 23/04; H05B 39/02; H05B 39/04; H05B 39/085; H05B 39/086; H05B 39/088; G08C 17/02; H03K 17/96; H03K 17/962; H03K 2017/9634; G06F 2203/04809
See application file for complete search history.

(56) **References Cited**

U.S. PATENT DOCUMENTS

D666,978	S *	9/2012	Felegy, Jr.	D13/164
D669,866	S *	10/2012	Gilbert	D13/162
D740,762	S *	10/2015	Miller	D13/162
9,389,769	B1 *	7/2016	O'Keeffe	G02B 6/0078
D768,582	S *	10/2016	Jacoby	D13/171
D781,792	S *	3/2017	Okawa	D13/162
D859,325	S *	9/2019	Cox	D13/164
D898,683	S *	10/2020	Lan	D13/162
11,017,965	B1 *	5/2021	Soberanis	H01H 1/24
D922,961	S *	6/2021	Chandwani	D13/158
2016/0353547	A1 *	12/2016	Shivell	H05B 47/11
2019/0245712	A1 *	8/2019	Yu	H04L 12/4625

OTHER PUBLICATIONS

Acuity sensorswitch specification sheet; Mar. 11, 2011; 2 pgs.;https://www.grainger.com/product/ACUITY-SENSOR-SWITCH-Digital-Wall-Switch-Sensor-23J487?opr=IDPPLARECS&analytics=PLAPDP_undefined.*

Philips Hue 562777 V2 Dimmer Switch, Feb. 28, 2021; 3 pgs.; https://www.amazon.com/Philips-Hue-562777-Dimmer-Switch/dp/B08W8GLPD5/ref=sr_1_1?crid=3915FLZESMMOC&dchild=1&keywords=philips+hue+smart+switch&qid=1626112731&sprefix=philips+hue+Smart+switch%2Caps%2C180&sr=8-1.*

* cited by examiner

Primary Examiner — Selina Sikder

(57) **CLAIM**

The ornamental design for a light dimmer switch, as shown and described.

DESCRIPTION

FIG. **1** is a front elevational view of a light dimmer switch showing my new design;
FIG. **2** is a rear elevational view thereof;
FIG. **3** is a left side view thereof;
FIG. **4** is a right side view thereof;
FIG. **5** is a top plan view thereof;
FIG. **6** is a bottom plan view thereof;
FIG. **7** is a bottom, front and right side perspective view thereof;
FIG. **8** is a bottom, rear and left side perspective view thereof; and,
FIG. **9** is a top, rear and left side perspective view thereof.
The broken lines in the drawings illustrate portions of the light dimmer switch which form no part of the claimed design.

1 Claim, 9 Drawing Sheets

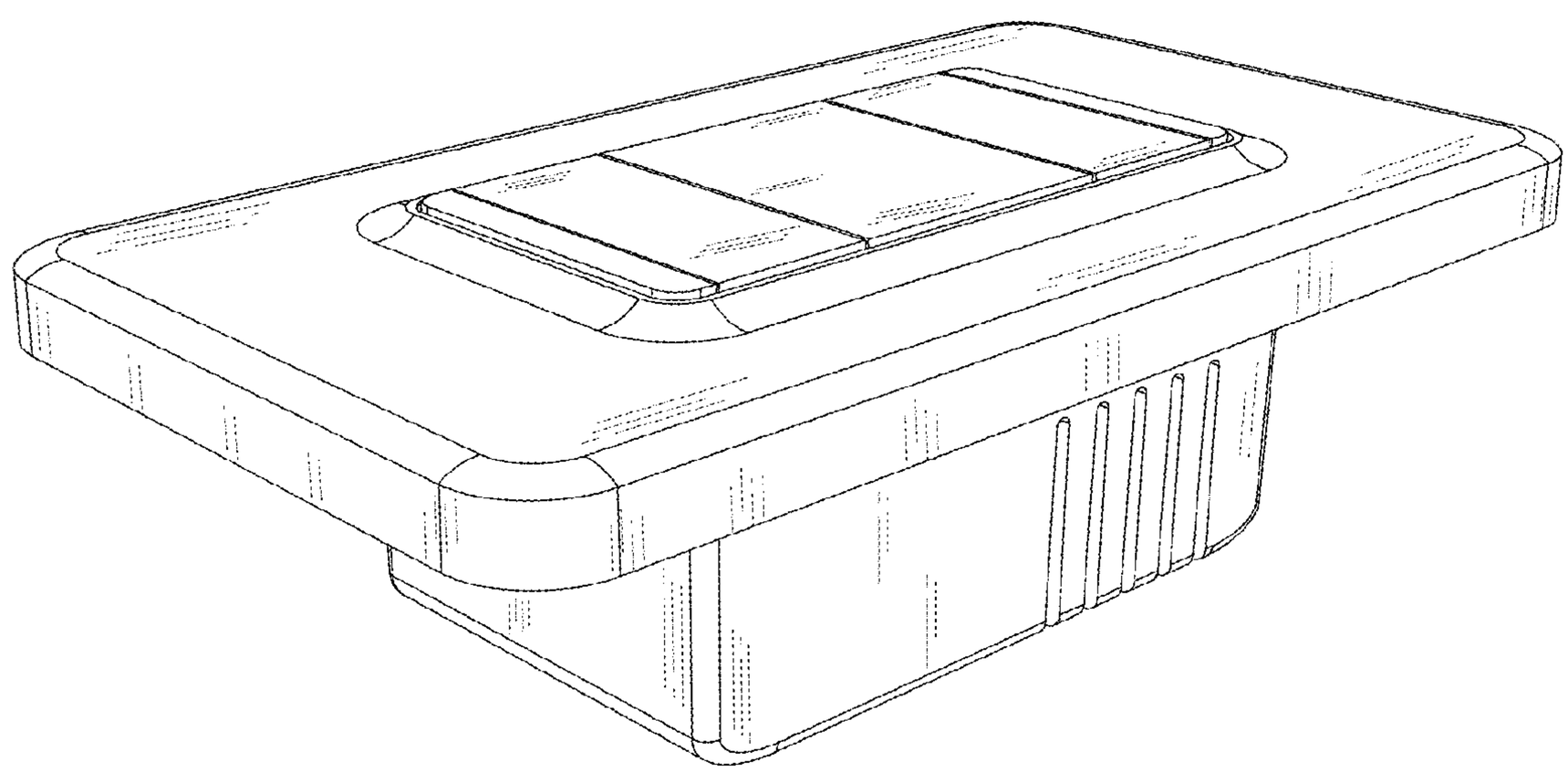

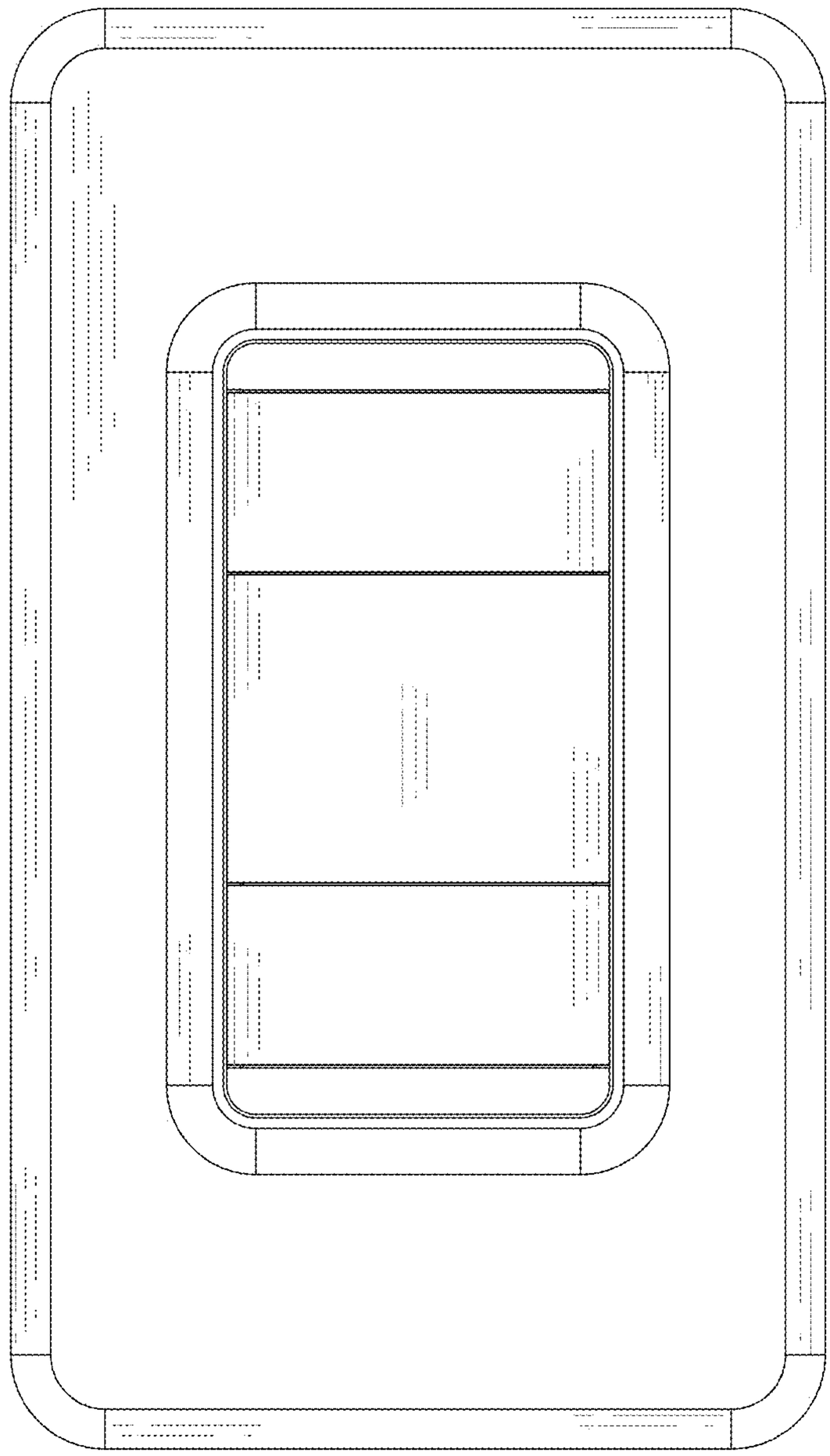

Fig. 1

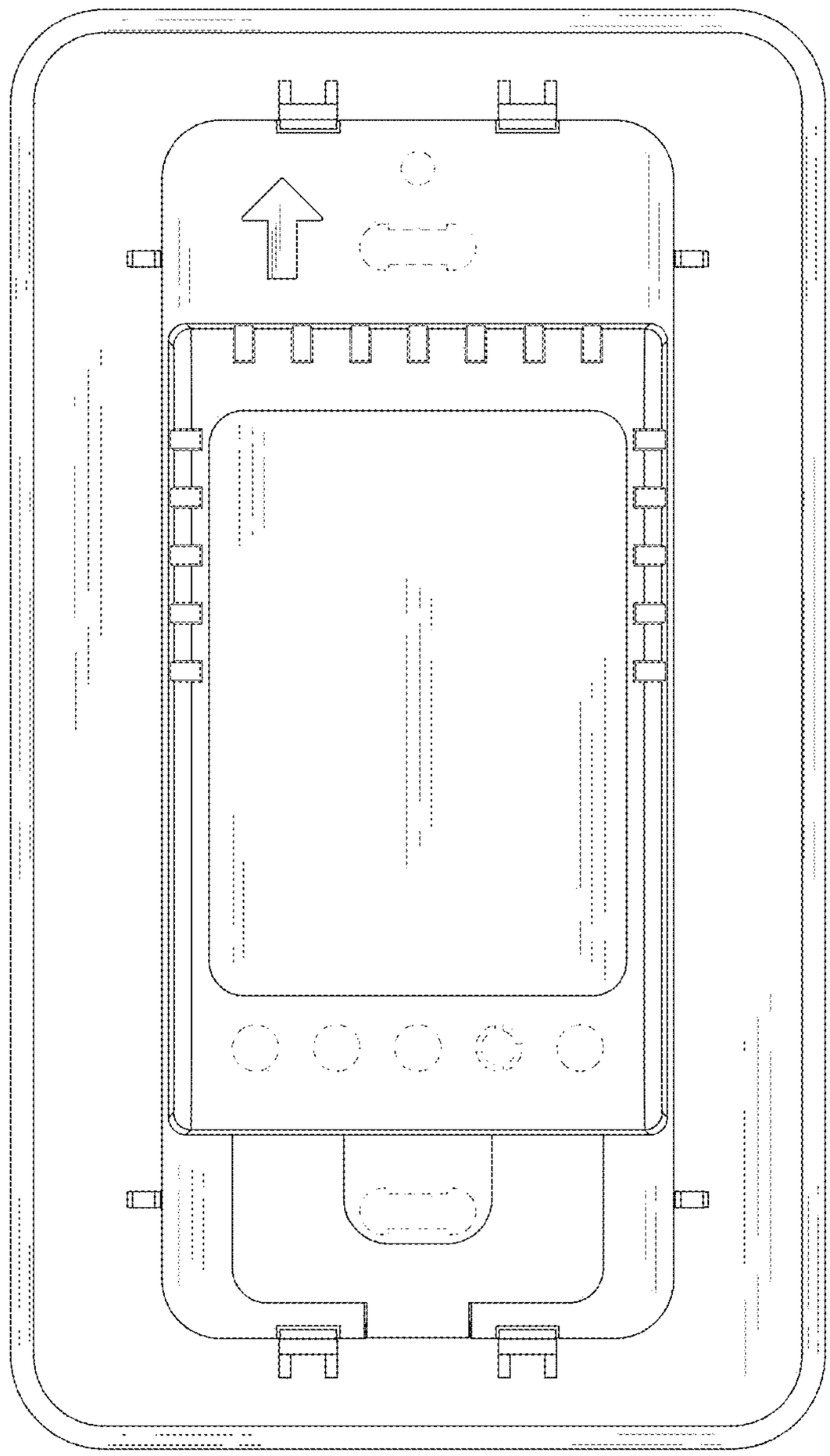

Fig. 2

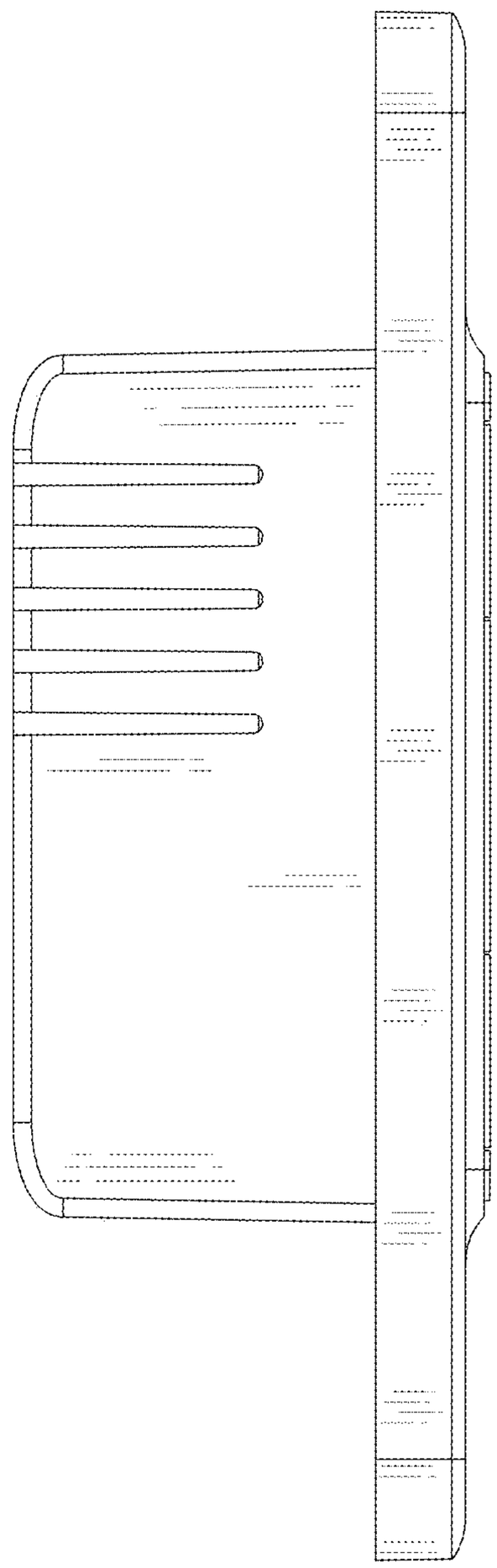

Fig. 3

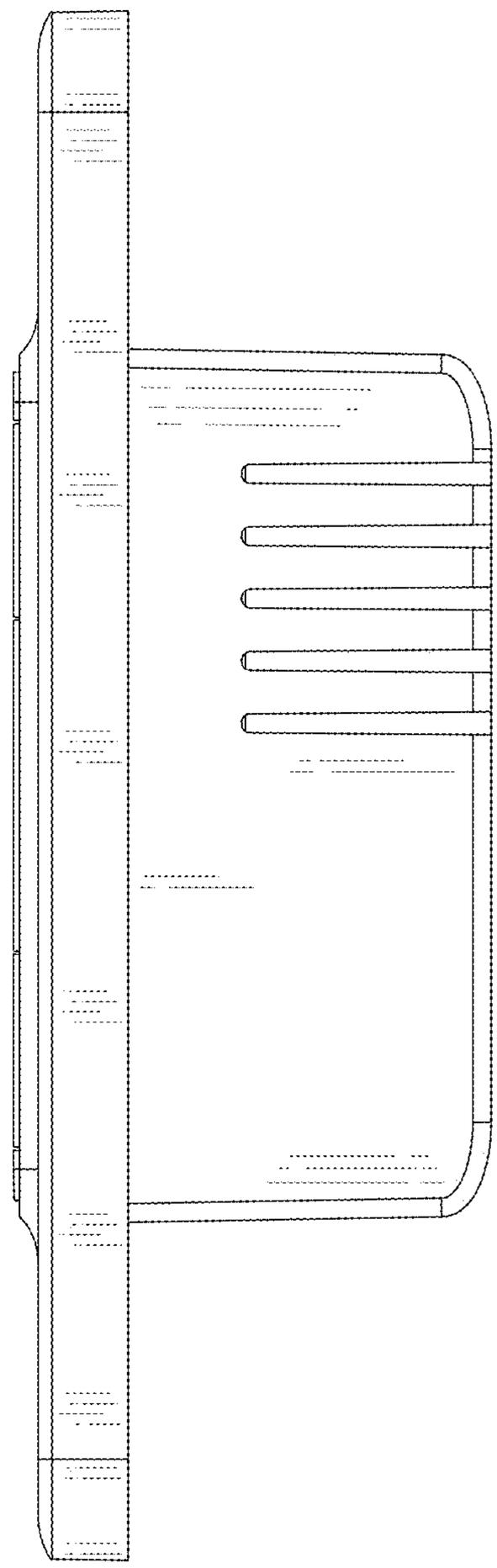

Fig. 4

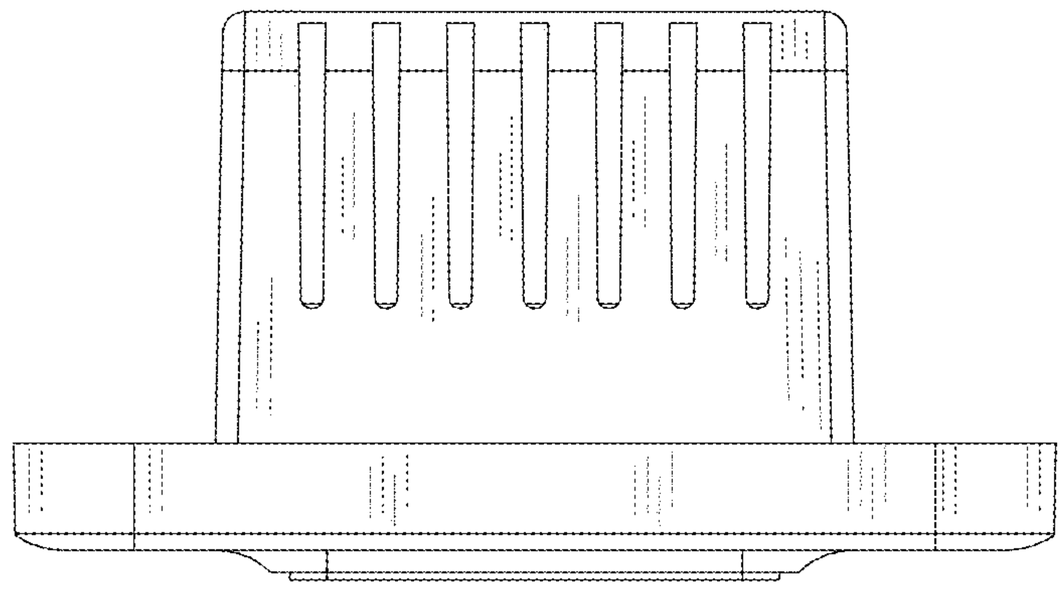

Fig. 5

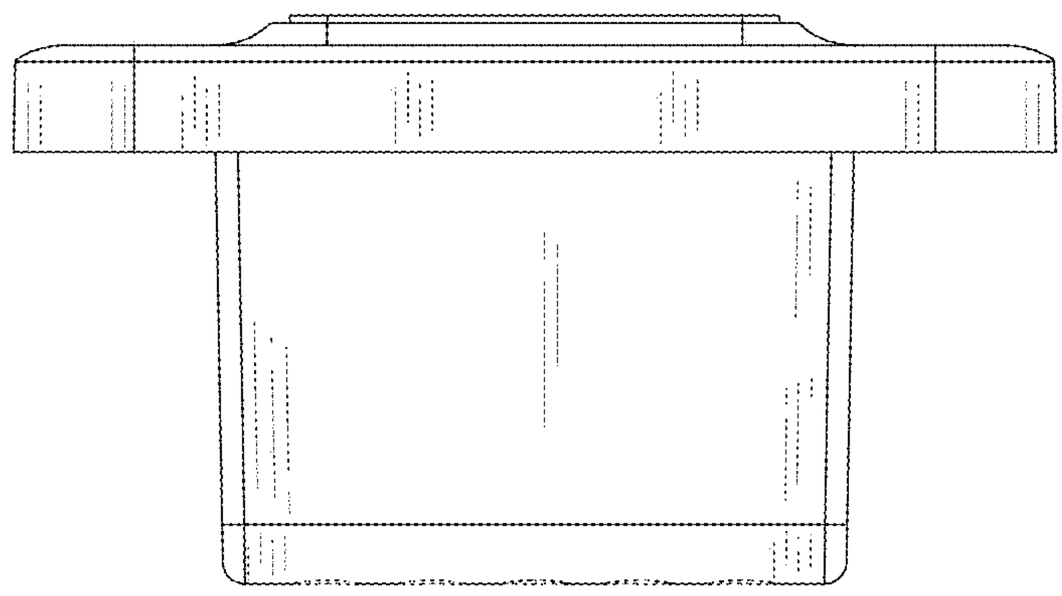

Fig. 6

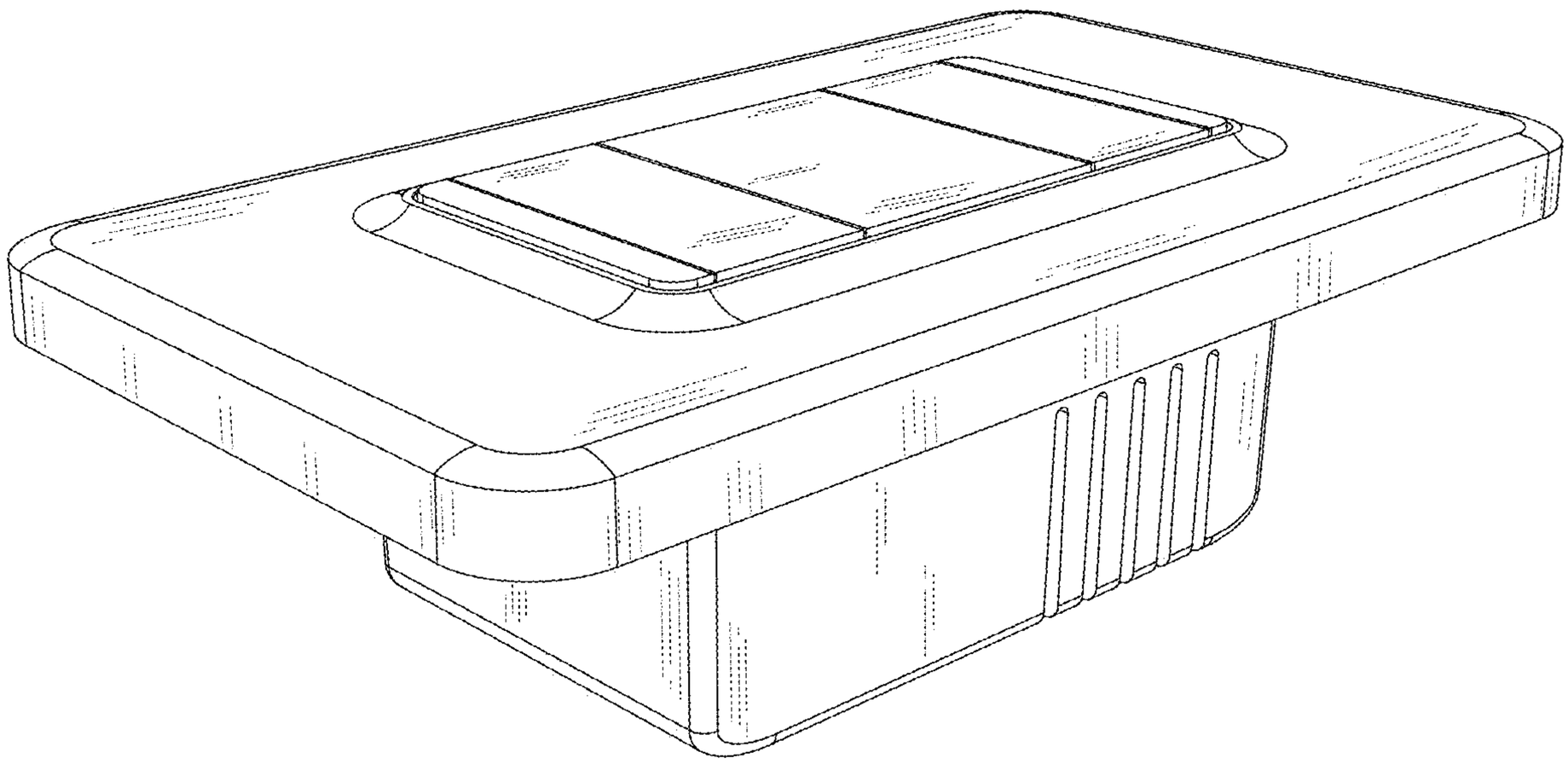

Fig. 7

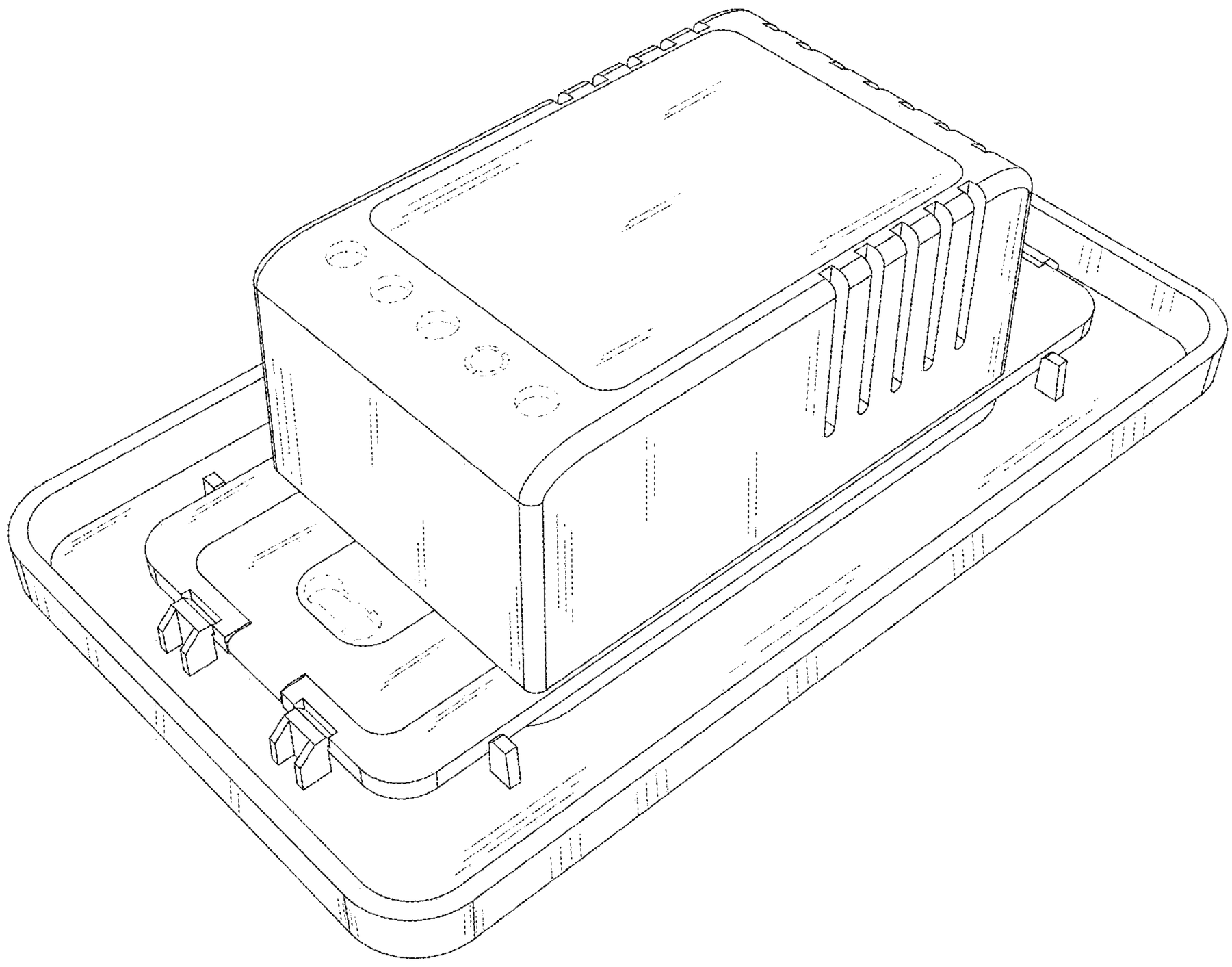

Fig. 8

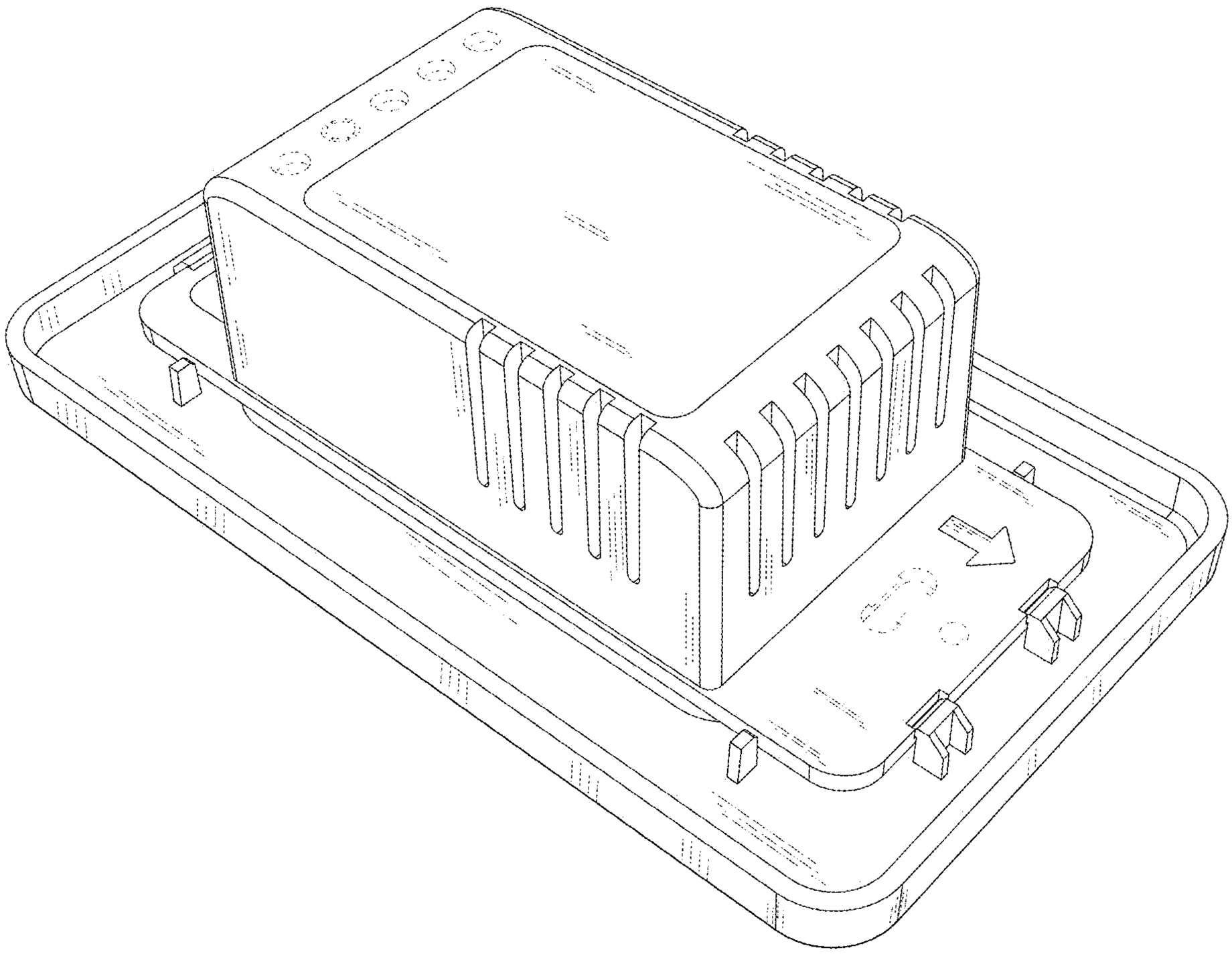

Fig. 9