US00D934927S

# (12) United States Design Patent

Hong et al.

(10) Patent No.: US D934,927 S
(45) Date of Patent: ** Nov. 2, 2021

(54) **UV PHOTOCURING 3D PRINTER**

(71) Applicants: **Yingsheng Hong**, Guangdong (CN); **Shengzhe Zhang**, Guangdong (CN)

(72) Inventors: **Yingsheng Hong**, Guangdong (CN); **Shengzhe Zhang**, Guangdong (CN)

(73) Assignee: **Shenzhen Elegoo Technology Co., Ltd.**, Guangdong (CN)

(**) Term: **15 Years**

(21) Appl. No.: **29/744,551**

(22) Filed: **Jul. 29, 2020**

(51) **LOC (13) Cl.** ..... **15-09**

(52) **U.S. Cl.**
USPC ..... **D15/122**

(58) **Field of Classification Search**
USPC ..... D15/122, 135, 138, 145, 146; D18/6–7, D18/14, 19, 50, 54, 54.1, 55, 59
CPC .. B29C 47/12; B29C 67/0059; B29C 67/6659
See application file for complete search history.

(56) **References Cited**

U.S. PATENT DOCUMENTS

D681,699 S * 5/2013 Lin ..... D15/122
D722,108 S * 2/2015 Reches ..... D18/50
D732,586 S * 6/2015 Chen ..... D15/122
D734,788 S * 7/2015 Reches ..... D15/122
D736,838 S * 8/2015 Costabeber ..... D15/122
D740,863 S * 10/2015 Kemperle ..... D15/122
D742,439 S * 11/2015 Kraibuhler ..... D15/122
D755,860 S * 5/2016 Busato ..... D15/122
D765,745 S * 9/2016 Cheung ..... D15/122
D766,998 S * 9/2016 Kao ..... D15/122
D783,693 S * 4/2017 Reches ..... D15/122
D787,574 S * 5/2017 Lee ..... D15/122
D835,162 S * 12/2018 Reches ..... D15/122
D836,141 S * 12/2018 Torrealba ..... D15/122
D854,591 S * 7/2019 Gupta ..... D15/122
D861,749 S * 10/2019 Besim ..... D15/122
D870,780 S * 12/2019 Zhang ..... D15/122
D886,167 S * 6/2020 Wang ..... D15/122
D893,564 S * 8/2020 Jeffery ..... D15/122
D895,698 S * 9/2020 Palmer ..... D15/122
D903,730 S * 12/2020 Johnson ..... D15/122
D905,134 S * 12/2020 Chen ..... D15/122
D905,135 S * 12/2020 Jeffery ..... D15/122
D906,381 S * 12/2020 Jeffery ..... D15/122
D907,077 S * 1/2021 Gjovik ..... D15/122
D908,750 S * 1/2021 Oliver Gonzalez ..... D15/122
D916,148 S * 4/2021 Sbabo ..... D15/122
2015/0276119 A1* 10/2015 Booker ..... B29C 64/118 248/561
2017/0355139 A1* 12/2017 Wolf ..... B29C 48/802

* cited by examiner

*Primary Examiner* — Patricia A Palasik

(57) **CLAIM**

The ornamental design for an UV photocuring 3D printer, as shown and described.

**DESCRIPTION**

FIG. **1** is a front elevationa view of an UV photocuring 3D printer showing my new design;
FIG. **2** is a rear elevational view thereof;
FIG. **3** is a top plan view thereof;
FIG. **4** is a bottom plan view thereof;
FIG. **5** is a left side elevational view thereof;
FIG. **6** is a right side elevational view thereof; and,
FIG. **7** is a perspective view thereof.

**1 Claim, 7 Drawing Sheets**

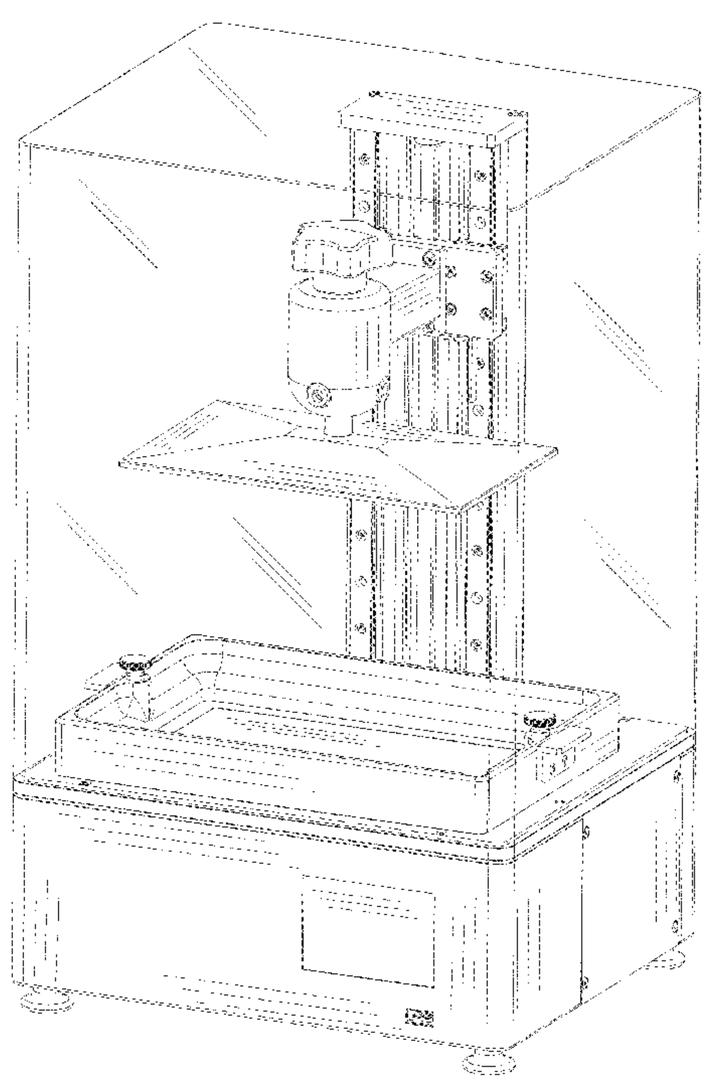

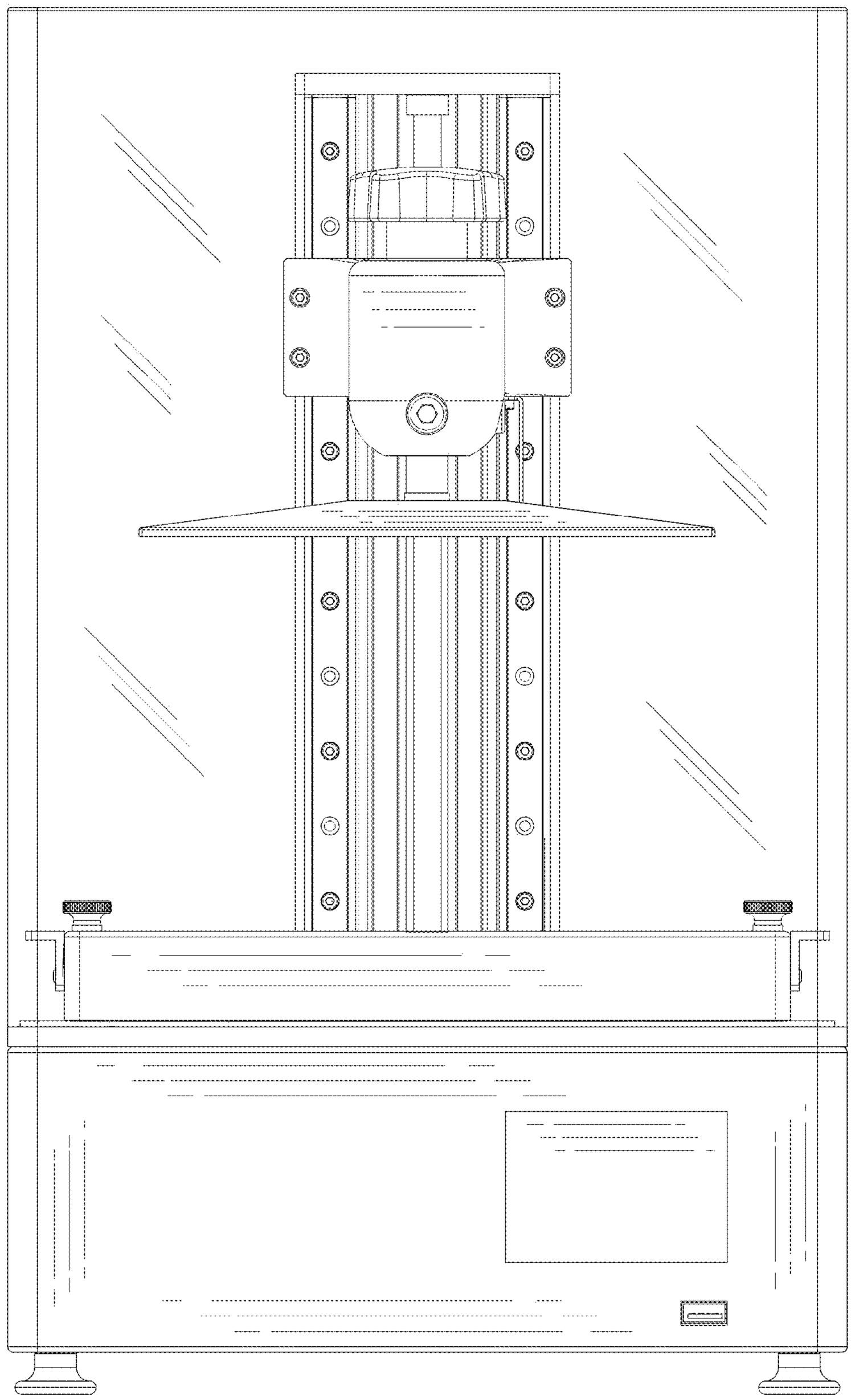

FIG. 1

FIG. 2

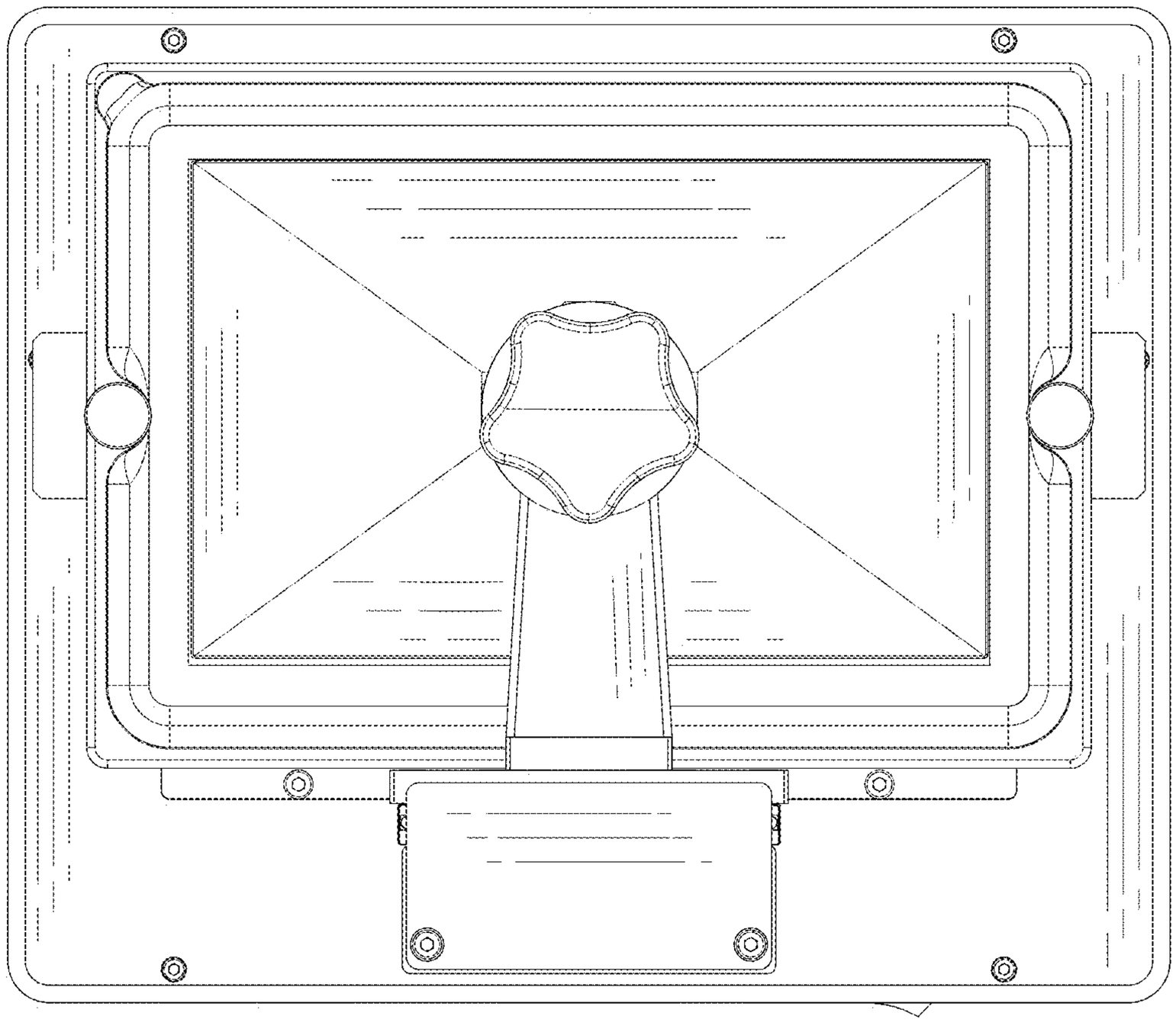

FIG. 3

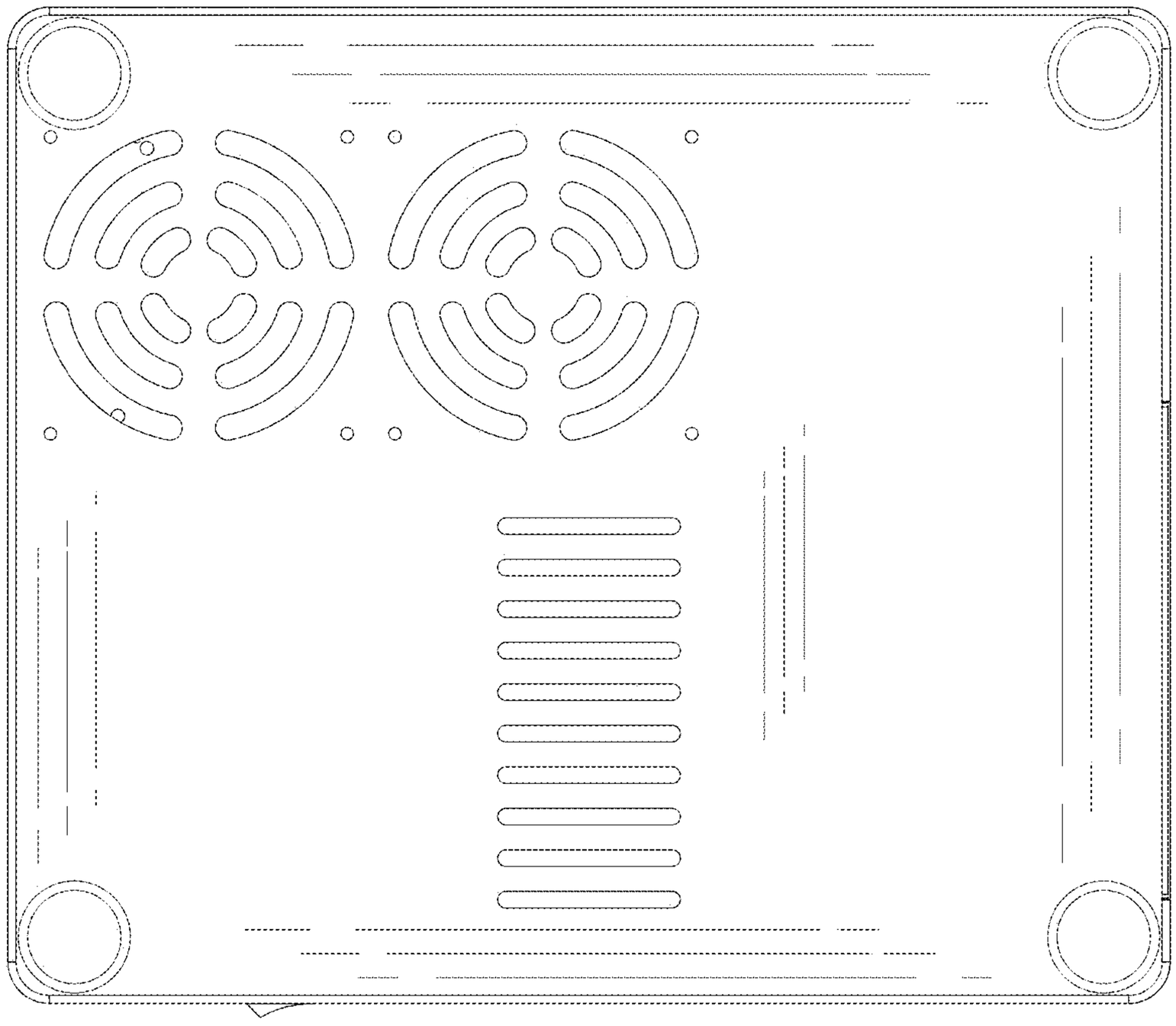

FIG. 4

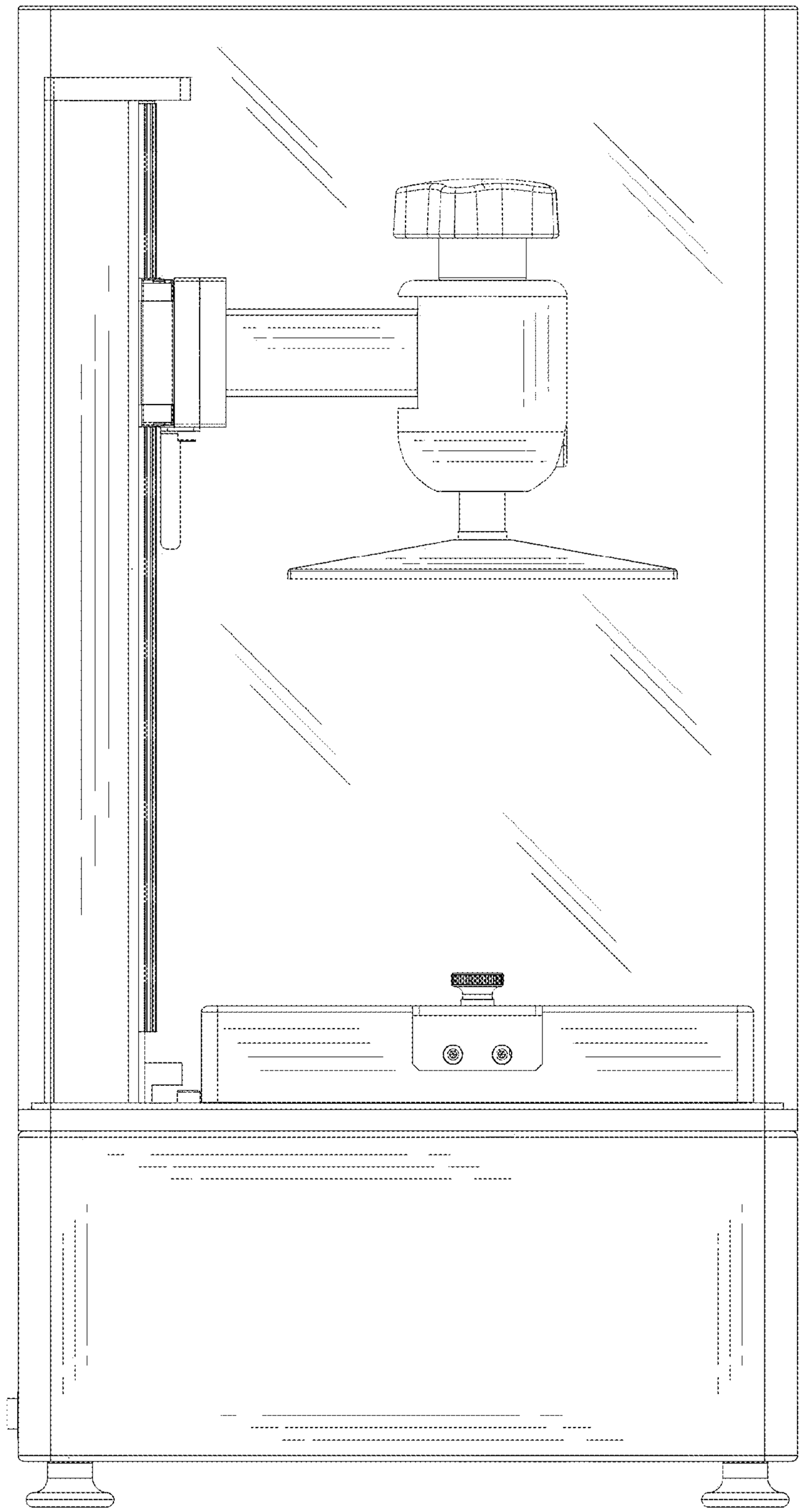

FIG. 5

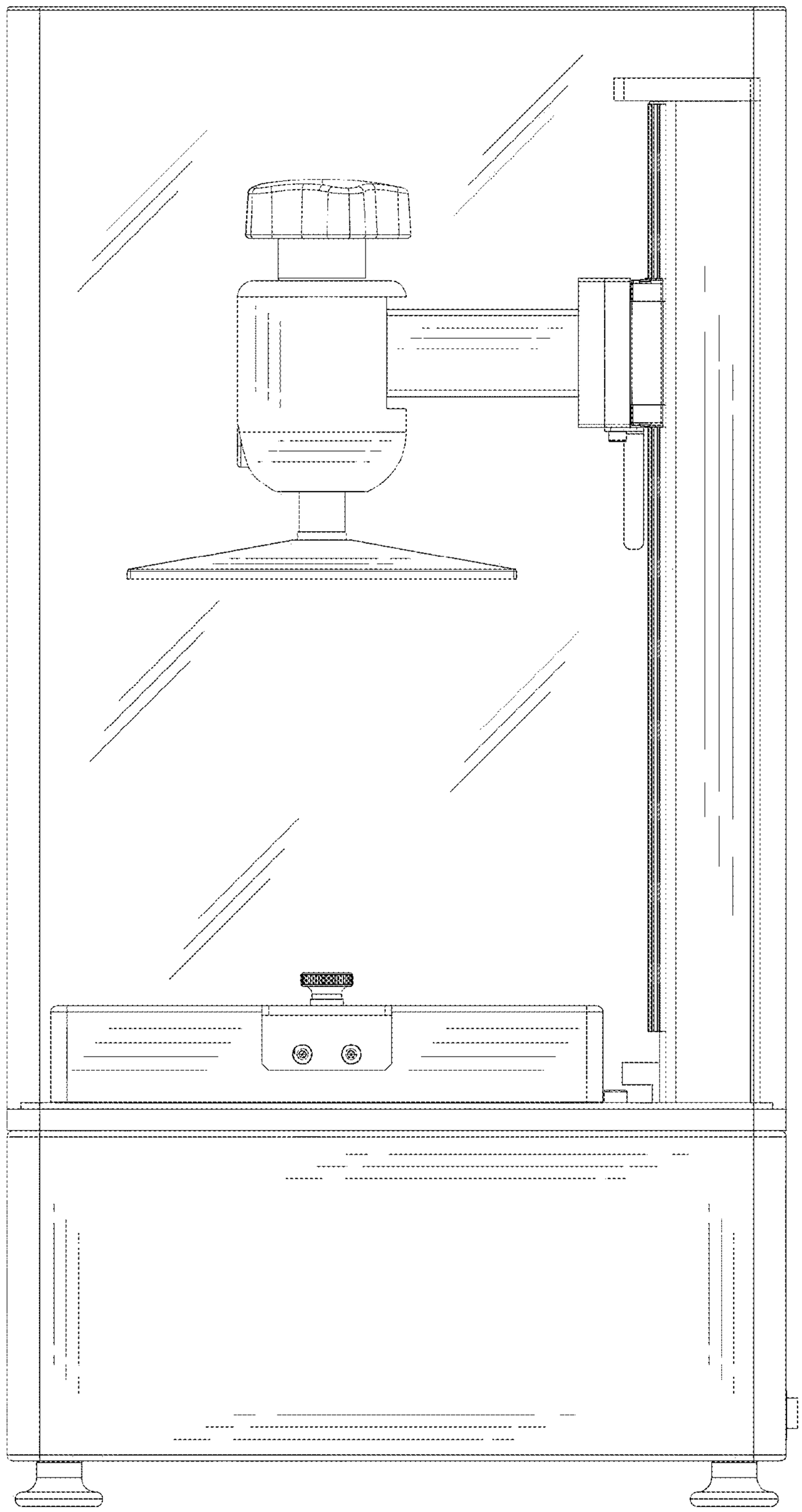

FIG. 6

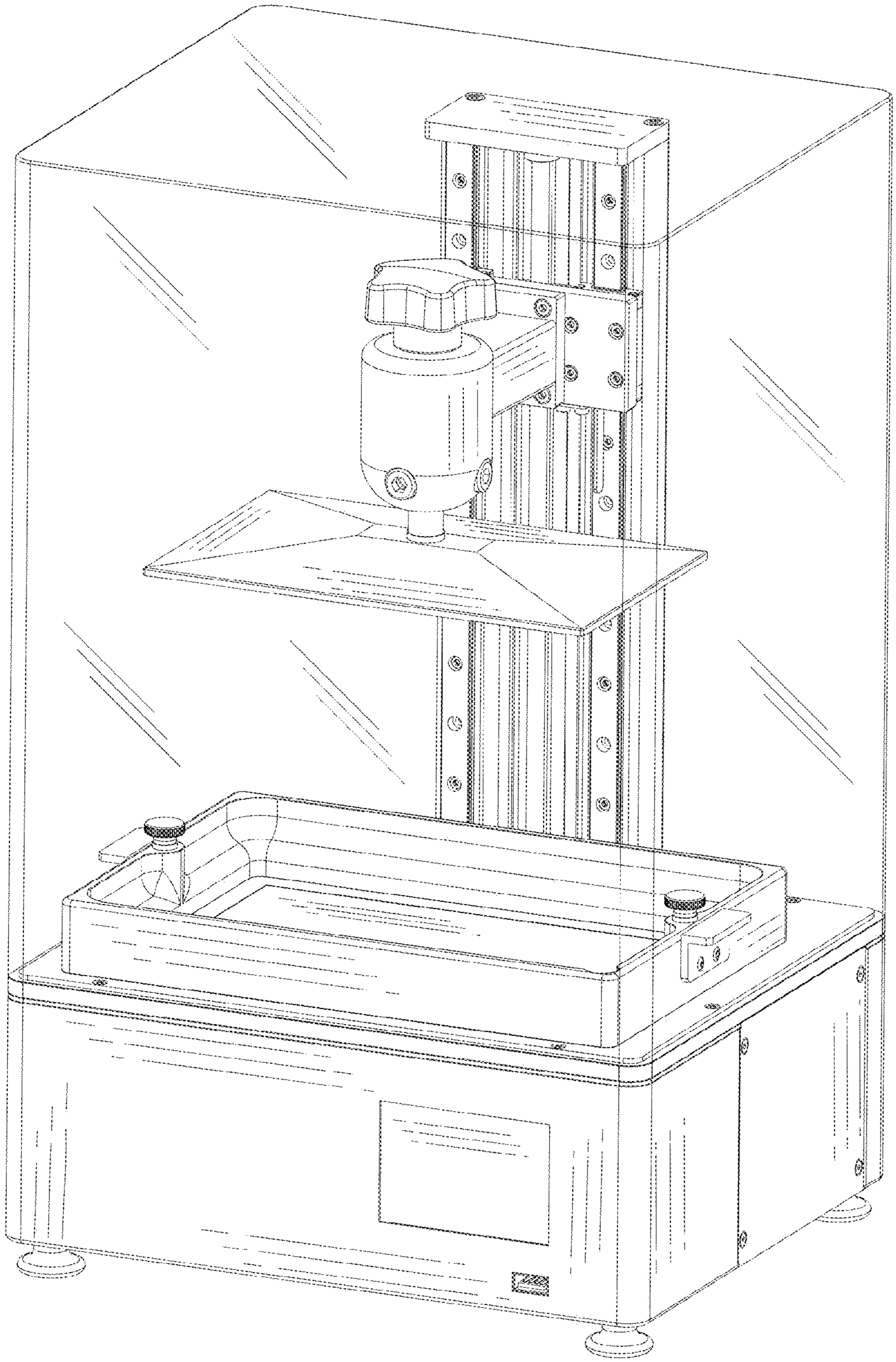

FIG. 7