US00D934648S

(12) United States Design Patent

Tompkin et al.

(10) Patent No.: US D934,648 S
(45) Date of Patent: ** Nov. 2, 2021

(54) **PORTABLE MULTI-TOOL**

(71) Applicant: **MerchSource, LLC**, Irvine, CA (US)

(72) Inventors: **Crispian Tompkin**, Los Angeles, CA (US); **Jongsoo Kim**, Irvine, CA (US)

(73) Assignee: **MerchSource, LLC**, Irvine, CA (US)

(**) Term: **15 Years**

(21) Appl. No.: **29/681,745**

(22) Filed: **Feb. 27, 2019**

(51) **LOC (13) Cl.** **08-05**

(52) **U.S. Cl.**
USPC **D8/105**

(58) **Field of Classification Search**
USPC D8/1, 20–26, 70, 382, 105, 55, 80–82, D8/87, 104, 107, 14
CPC ... B25F 1/02; B25F 1/006; B08B 1/00; B08B 1/0001; B08B 7/04
See application file for complete search history.

(56) **References Cited**

U.S. PATENT DOCUMENTS

D338,386 S * 8/1993 Frazer D8/105
D417,130 S * 11/1999 Hollinger D8/105
D420,269 S * 2/2000 Ben-Moshe D8/105
D459,190 S * 6/2002 Chen D26/38
D463,494 S * 9/2002 Mori D19/65
D577,562 S * 9/2008 Lin D8/105
D671,024 S * 11/2012 Stowers D8/105
D694,609 S * 12/2013 Hicks D8/98
D705,682 S * 5/2014 Stowers D10/86
D707,097 S * 6/2014 Kao D8/105
D744,807 S * 12/2015 Hicks D8/98
D760,056 S * 6/2016 Tripp B25B 13/56 D8/105
D897,171 S * 9/2020 Hodson D8/14

* cited by examiner

Primary Examiner — Janice Hallmark
(74) *Attorney, Agent, or Firm* — Avyno Law P.C.

(57) **CLAIM**

We claim the ornamental design for a portable multi-tool, as shown and described.

DESCRIPTION

FIG. **1** is a front perspective view of a portable multi-tool showing our new design;
FIG. **2** is a rear perspective view thereof;
FIG. **3** is another front perspective view thereof;
FIG. **4** is another rear perspective view thereof;
FIG. **5** is an exploded front perspective view thereof;
FIG. **6** is an exploded rear perspective view thereof;
FIG. **7** is another exploded front perspective view thereof;
FIG. **8** is another exploded rear perspective view thereof;
FIG. **9** is a front view thereof;
FIG. **10** is a back view thereof;
FIG. **11** is a right side view thereof;
FIG. **12** is a left side view thereof;
FIG. **14** is a top view thereof; and,
FIG. **14** is a bottom view thereof.
The dashed lines in the drawings illustrate portions of the portable multi-tool that form no part of the claimed design.

1 Claim, 7 Drawing Sheets

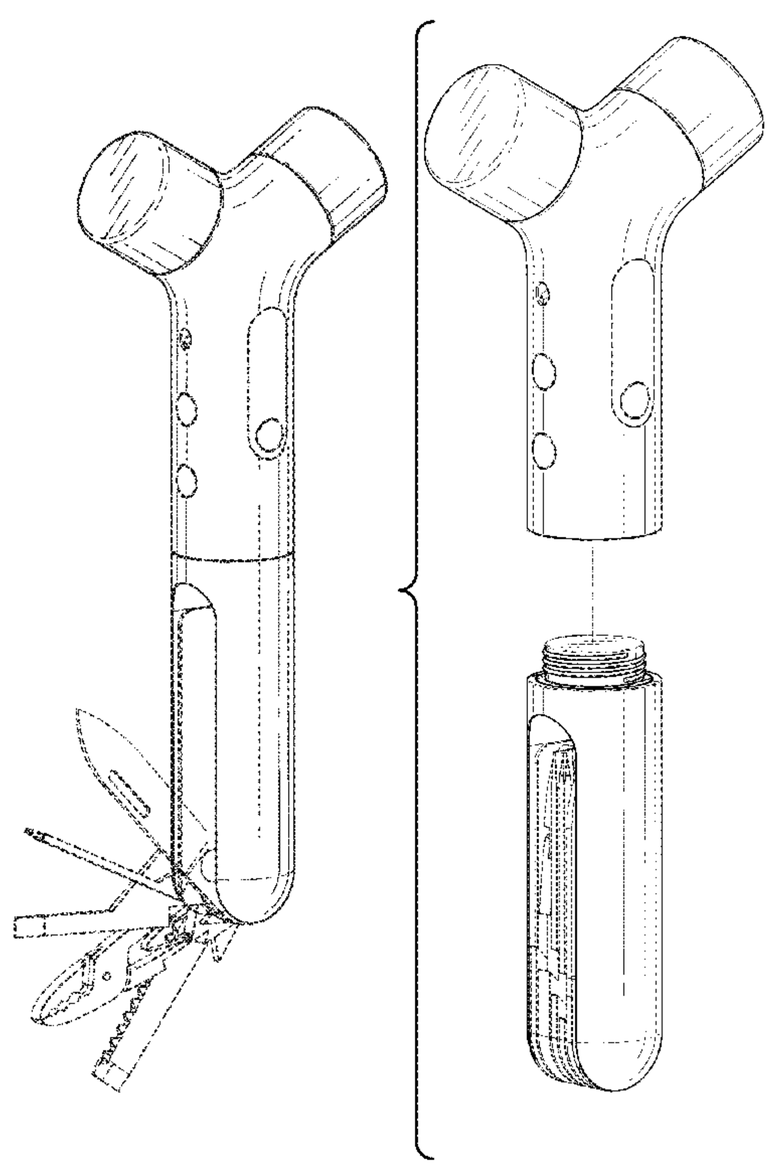

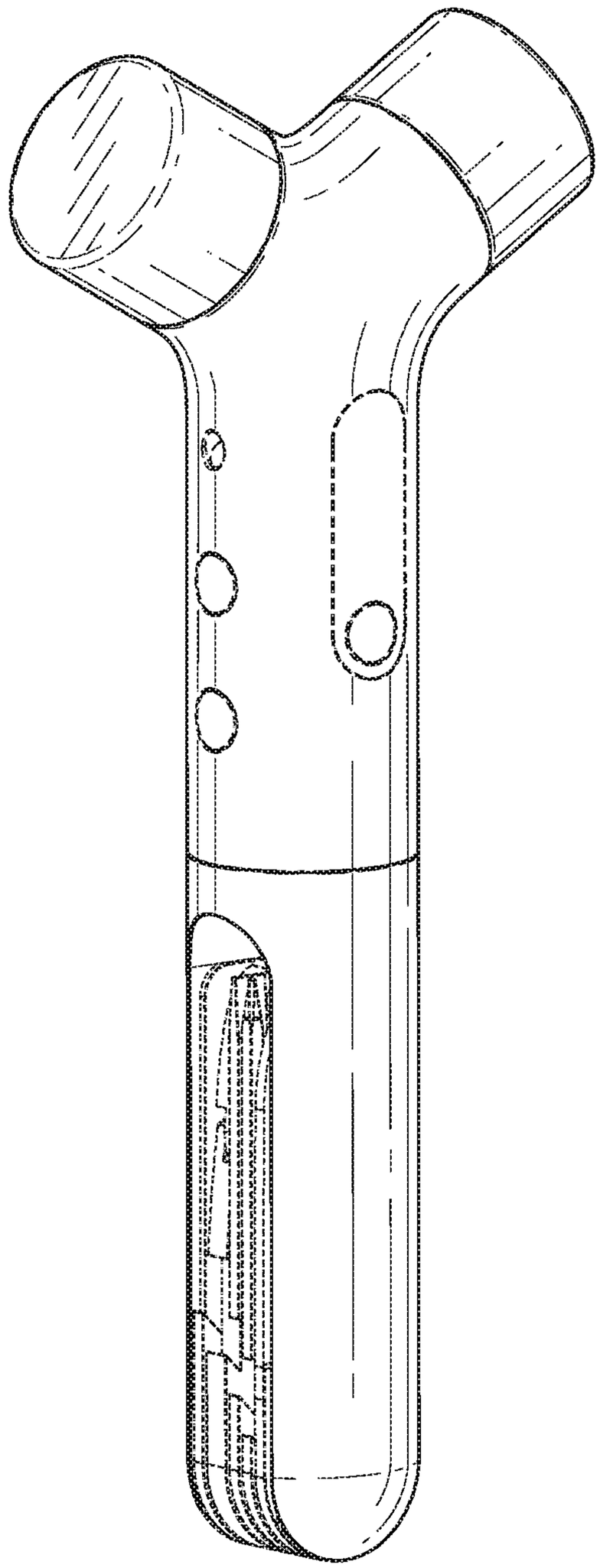

FIG. 1

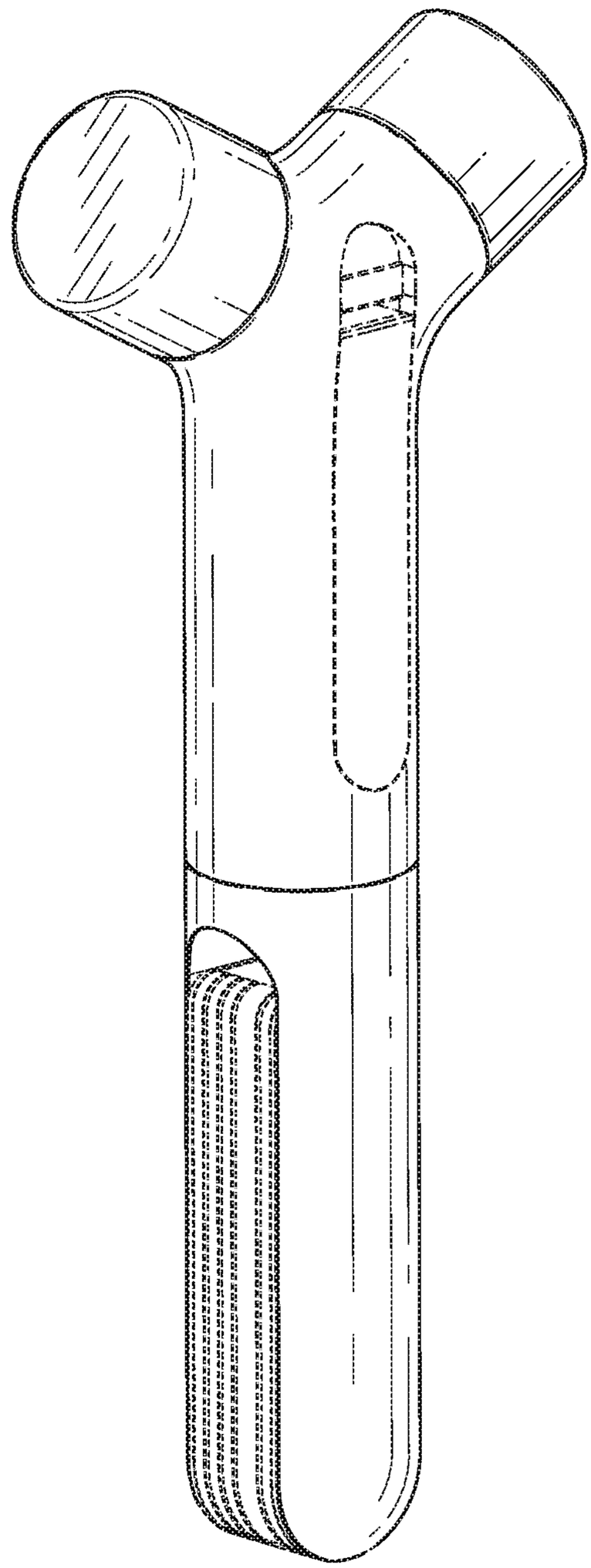

FIG. 2

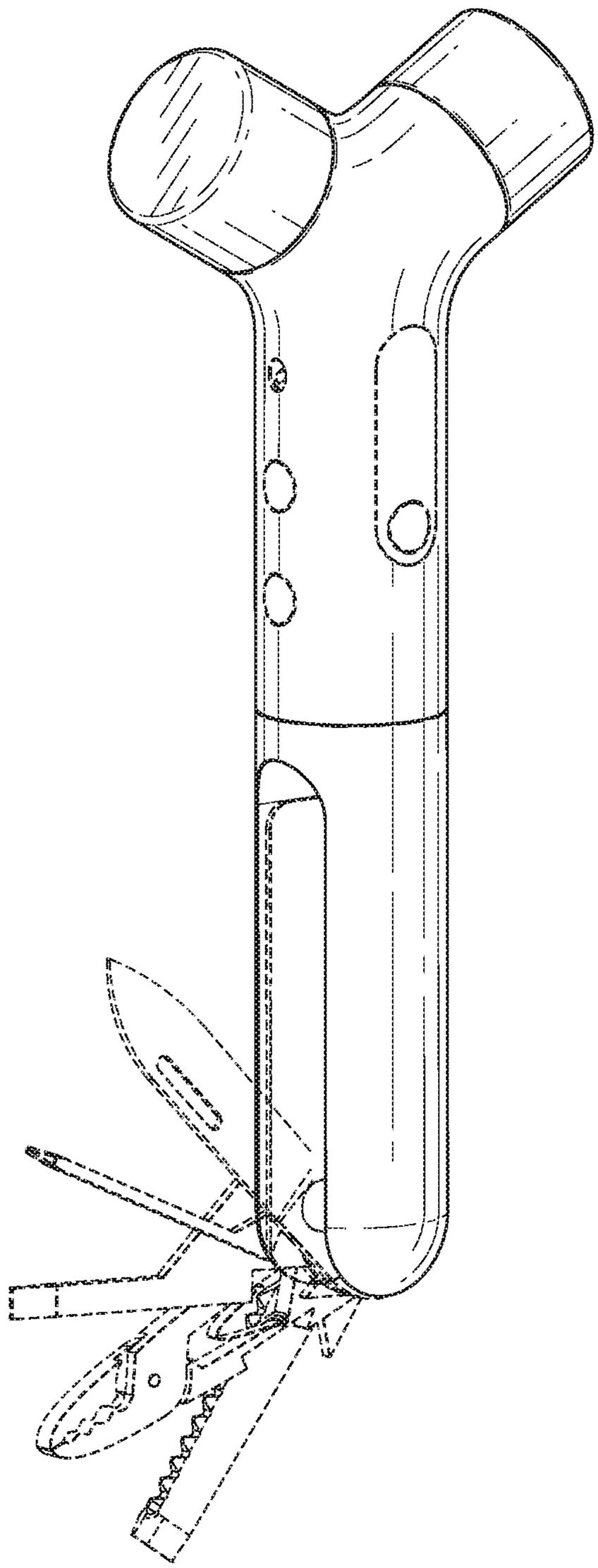

FIG. 3

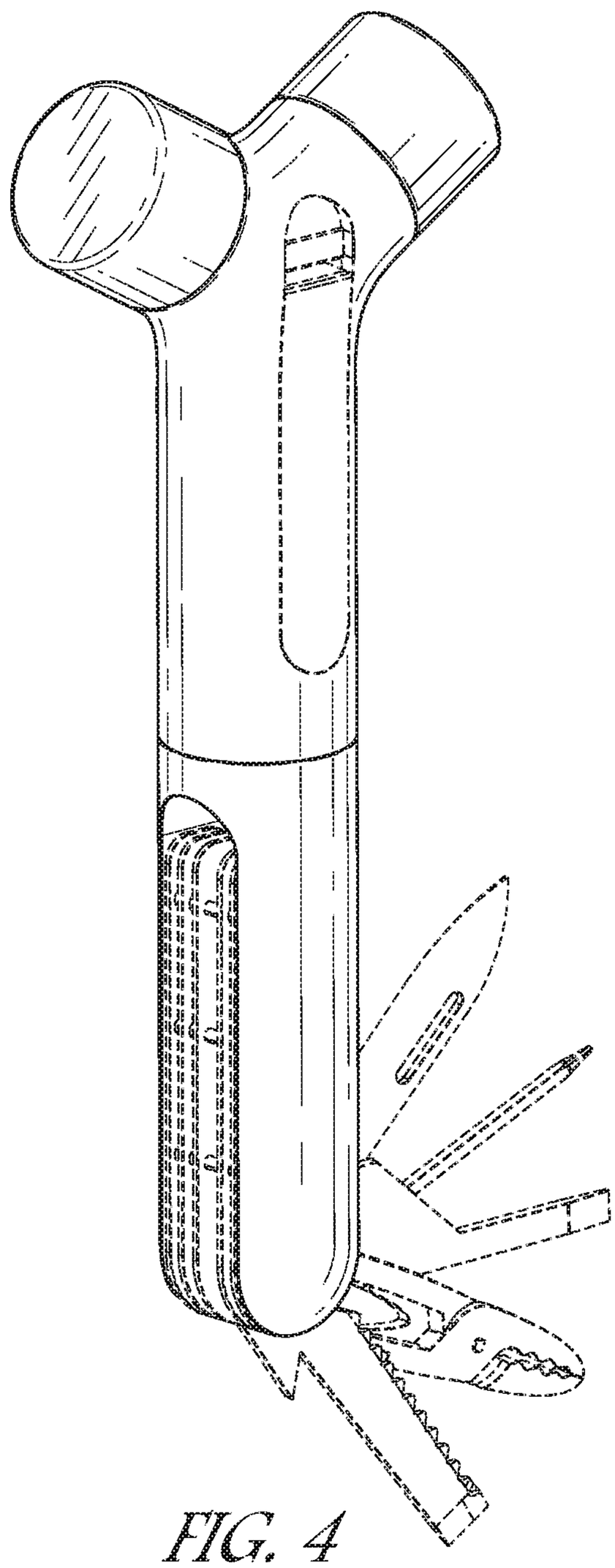

FIG. 4

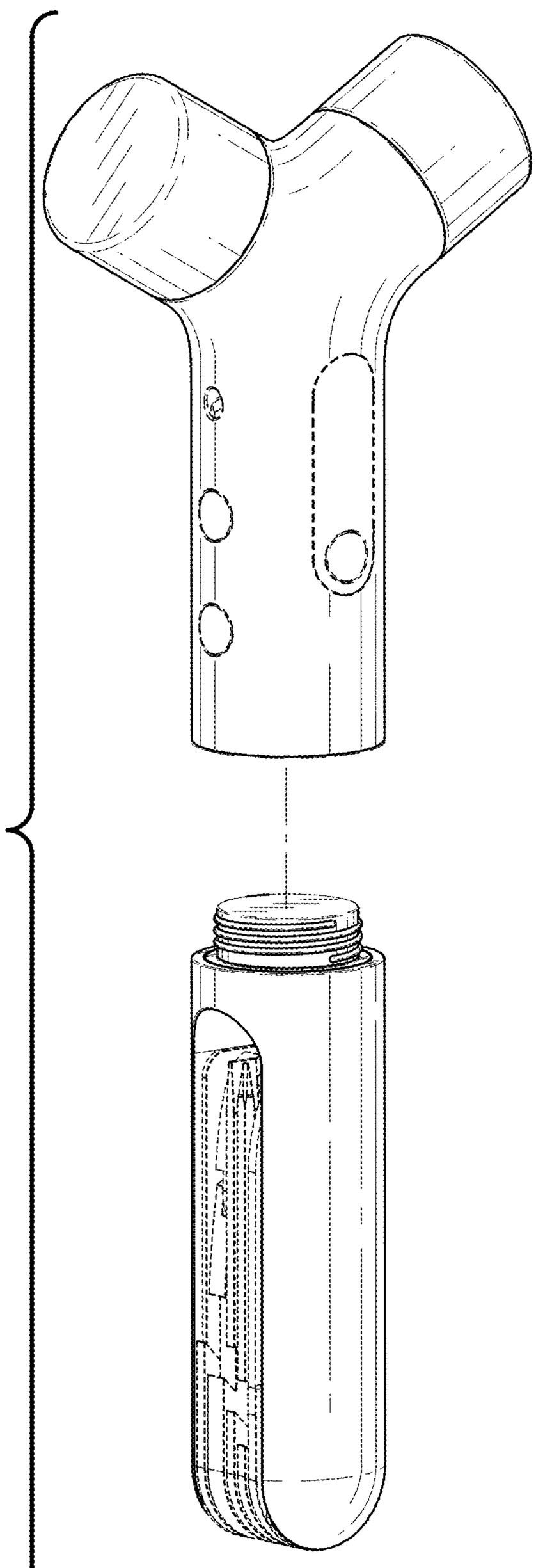

FIG. 5

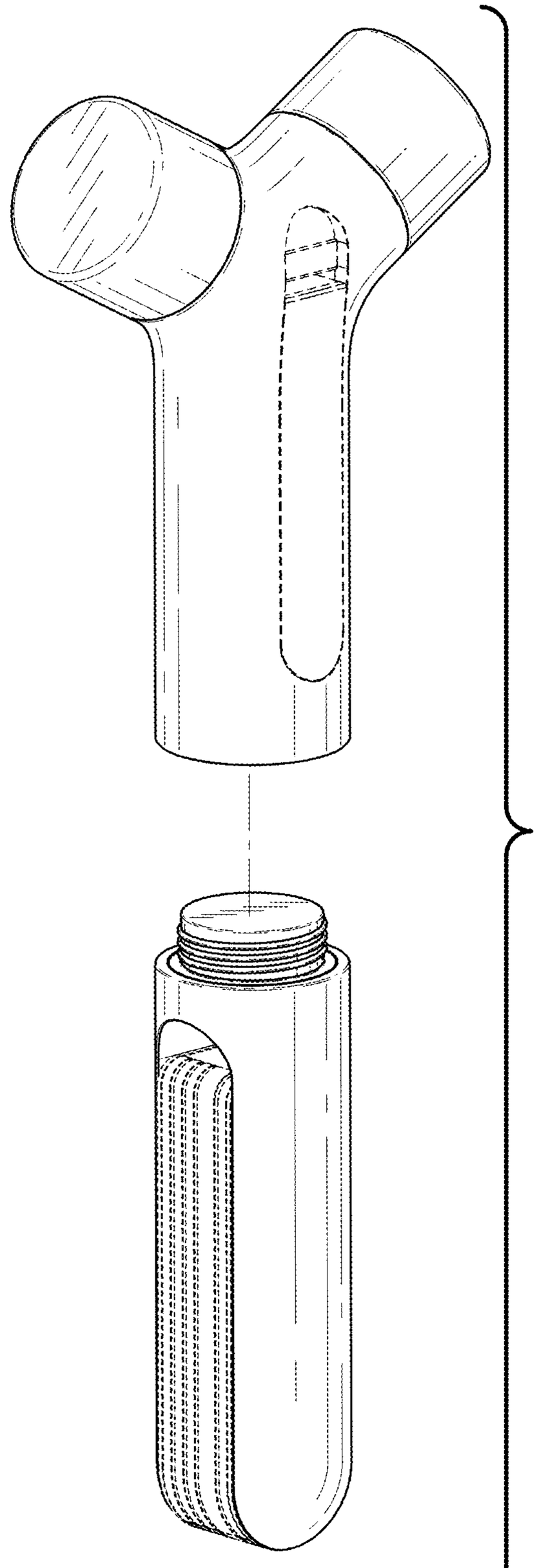

FIG. 6

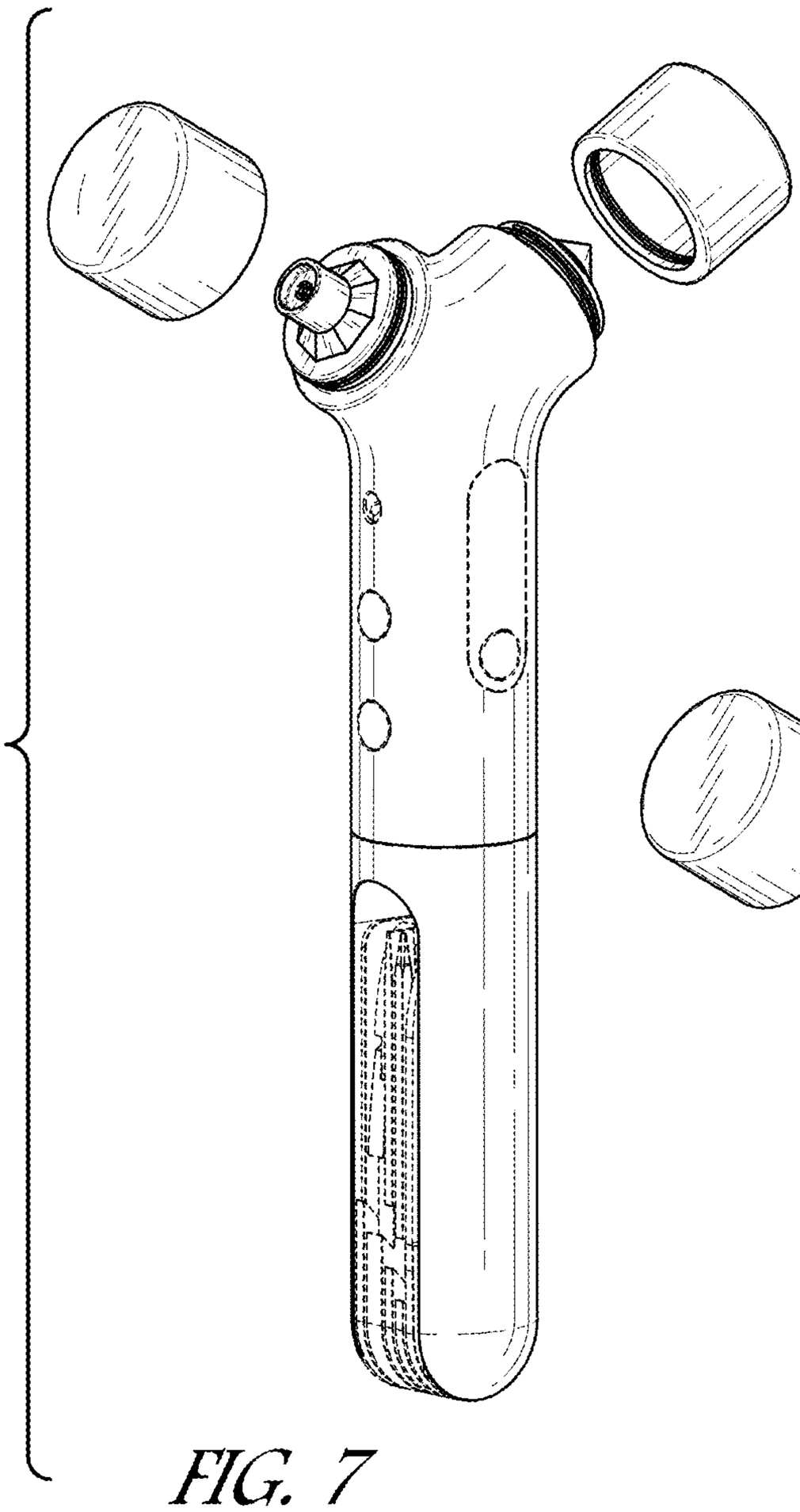

FIG. 7

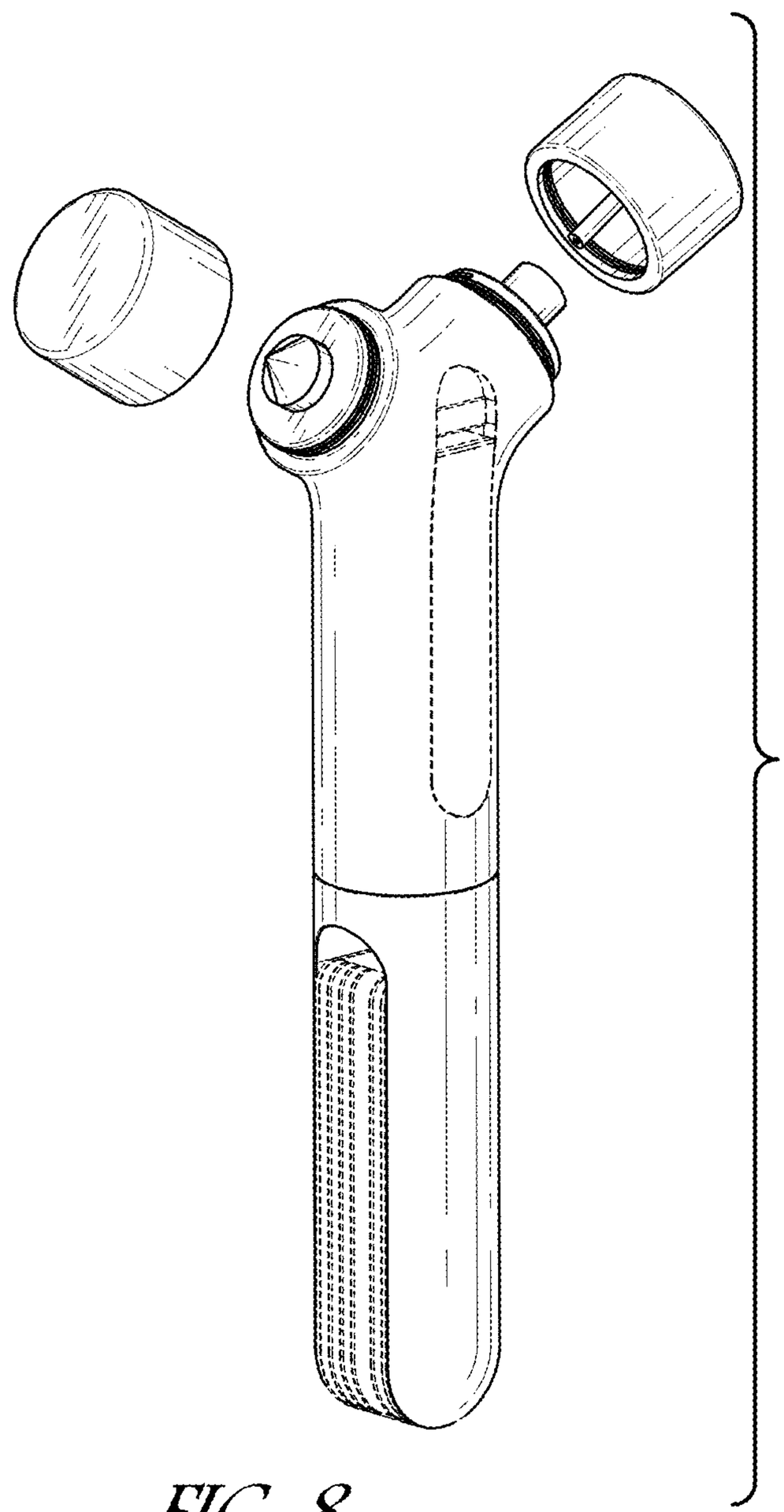

FIG. 8

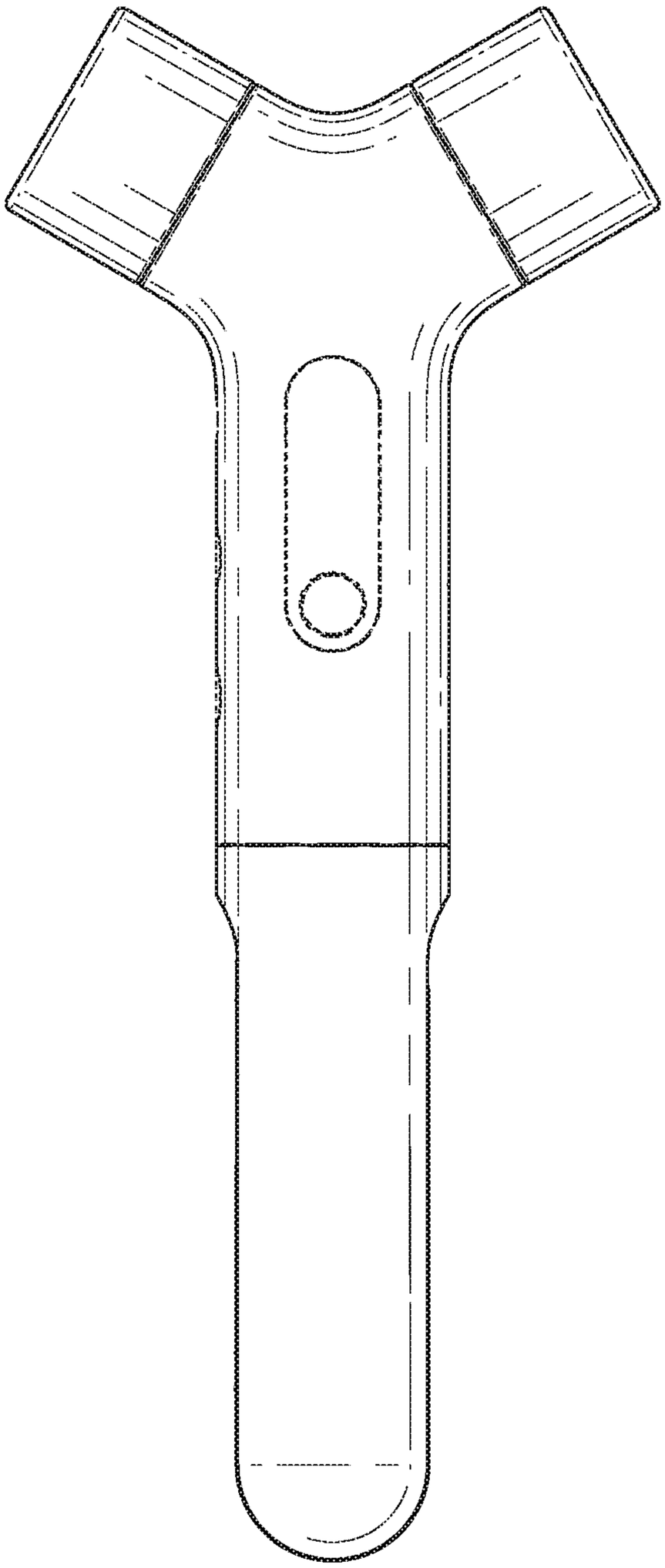

FIG. 9

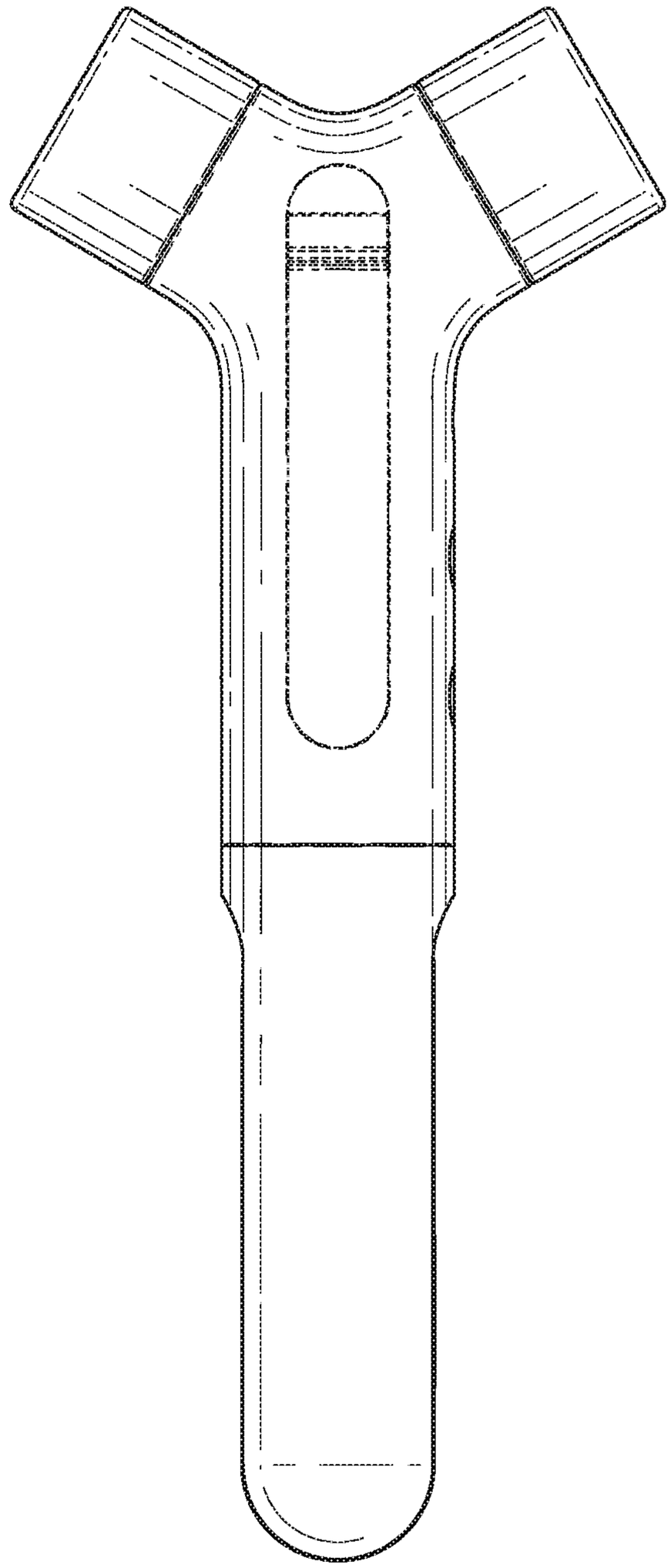

FIG. 10

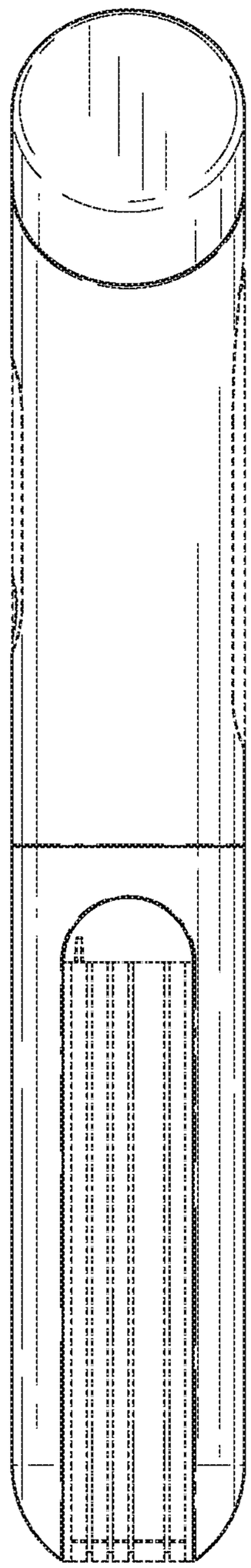

FIG. 11

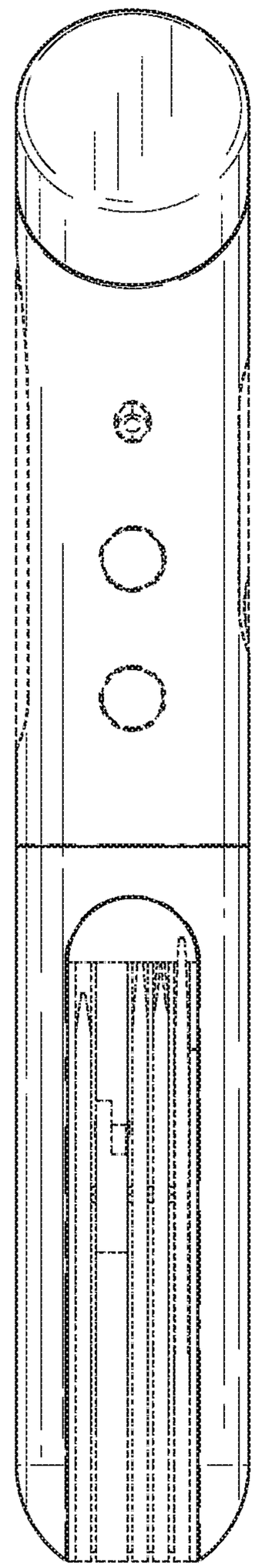

FIG. 12

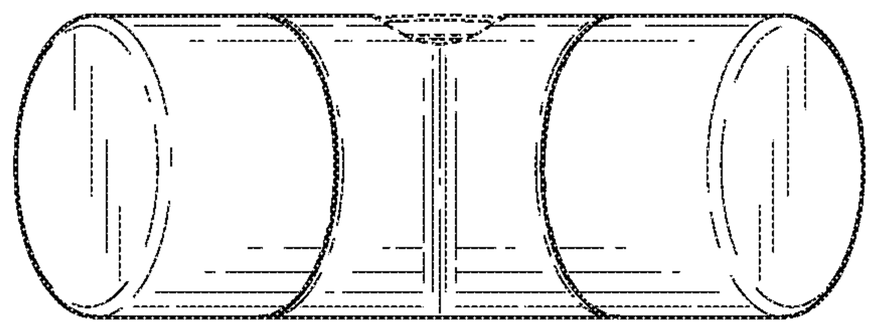

FIG. 13

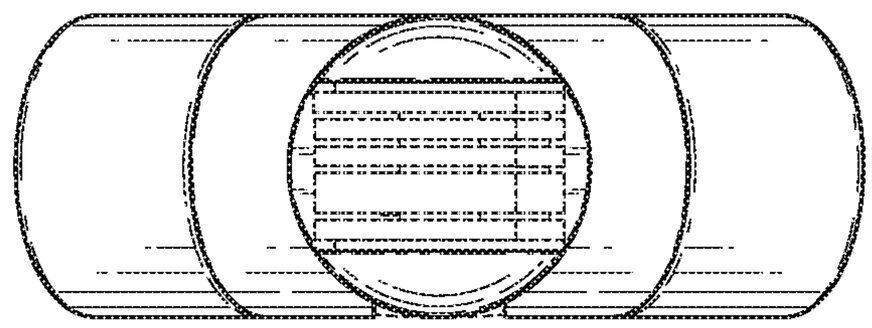

FIG. 14