US00D934345S

(12) United States Design Patent

Morimoto et al.

(10) Patent No.: US D934,345 S
(45) Date of Patent: ** Oct. 26, 2021

(54) **CONTROLLER ADD-ON DEVICE**

(71) Applicant: **Sony Interactive Entertainment Inc.**, Tokyo (JP)

(72) Inventors: **So Morimoto**, Saitama (JP); **Arthur Kwun**, Newark, CA (US)

(73) Assignee: **Sony Interactive Entertainment Inc.**, Tokyo (JP)

(**) Term: **15 Years**

(21) Appl. No.: **29/699,929**

(22) Filed: **Jul. 30, 2019**

(51) **LOC (13) Cl.** **21-01**

(52) **U.S. Cl.**
USPC **D21/333**; D14/401; D14/454

(58) **Field of Classification Search**
USPC D14/400, 401, 412, 356, 358, 383, 388, D14/454, 203.3, 218, 426–431, 433, 434, D14/435, 435.1; D21/333, 324, 328; D13/162, 162.1, 163, 168–172; D10/78, D10/103
CPC A63F 13/00; A63F 13/02; A63F 13/20; A63F 13/24; A63F 13/25; A63F 13/90; A63F 13/98; G06F 3/014; G06F 3/017; G05G 9/047
See application file for complete search history.

(56) **References Cited**

U.S. PATENT DOCUMENTS

D441,404 S * 5/2001 Okimoto D21/333
D441,405 S * 5/2001 Okimoto D21/333
D635,615 S * 4/2011 Foster D21/333
D645,910 S * 9/2011 Foster D21/333
D702,194 S * 4/2014 Cho D13/162
D705,741 S * 5/2014 Porter D13/162
D725,610 S * 3/2015 Dasbach D13/168
D736,322 S * 8/2015 Navid D21/333
D744,043 S * 11/2015 Burgess D21/333
D744,044 S * 11/2015 Yoon D21/333
D766,375 S * 9/2016 Kujawski D21/333
D784,335 S * 4/2017 Kujawski D14/401
D794,026 S * 8/2017 Kujawski D14/401
9,804,864 B1 10/2017 Sharma et al.
(Continued)

OTHER PUBLICATIONS

"Gamers are paying $150 or more for customizable controllers, but Sony's new $30 add-on will give your PlayStation 4 controller . . . ," online, post date Dec. 18, 2019, URL: https://www.businessinsider.com/sony-back-button-attachment-for-ps4-controller-allows-customization-2019-12, retrieved Aug. 14, 2020.*
(Continued)

Primary Examiner — Rebekah A Caruso
(74) *Attorney, Agent, or Firm* — JDI Patent; Joshua D. Isenberg; Robert Pullman

(57) **CLAIM**

The ornamental design for a controller add-on device, as shown and described.

DESCRIPTION

FIG. **1** is a bottom view of a controller add-on device showing our new design.
FIG. **2** is a front view thereof.
FIG. **3** is a right side view thereof.
FIG. **4** is a rear view thereof.
FIG. **5** is a top view thereof.
FIG. **6** is a left side view of a controller add-on device mounted to a controller showing our new design.
FIG. **7** is a perspective view of a controller add-on device showing our new design with the connectors shown in different positions; and,
FIG. **8** is a bottom view of a controller add-on device mounted to a controller showing our new design.
Portions of the drawings shown in broken lines are environmental structure that is not part of the design.

1 Claim, 5 Drawing Sheets

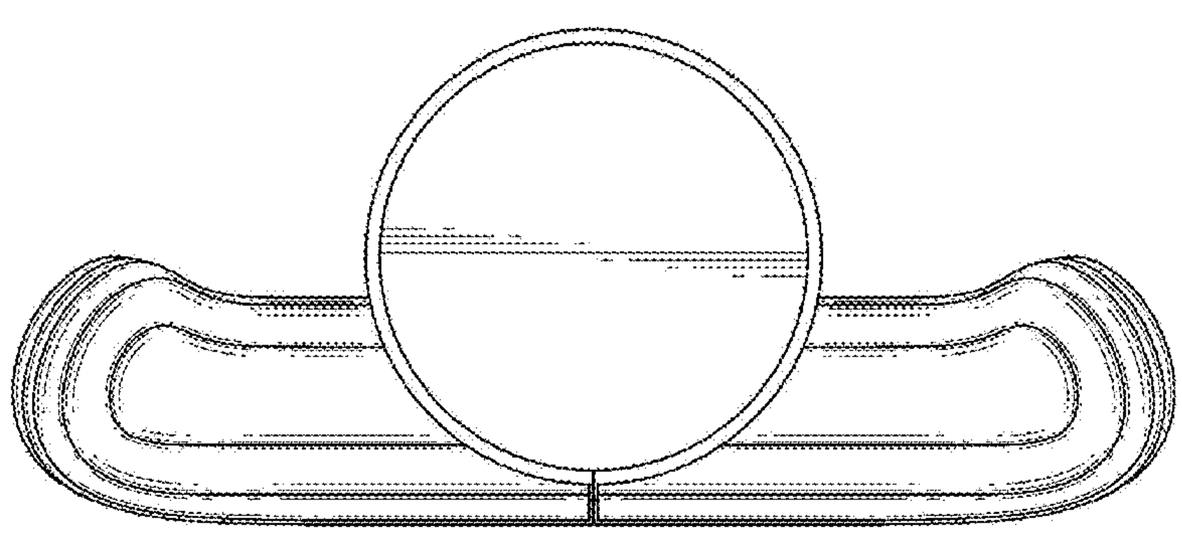

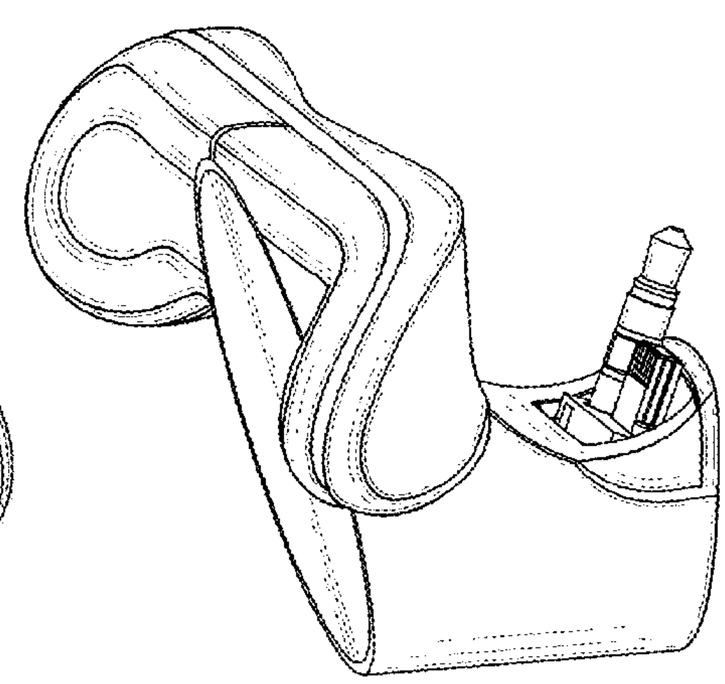

(56) **References Cited**

U.S. PATENT DOCUMENTS

D839,919	S *	2/2019	Valluripalli	D14/496
D886,101	S *	6/2020	Pai	D14/357
2004/0023719	A1	2/2004	Hussaini et al.	
2004/0033835	A1	2/2004	Chao	
2011/0105231	A1	5/2011	Ambinder et al.	
2014/0139455	A1	5/2014	Argiro	
2014/0357372	A1	12/2014	Garcia et al.	
2015/0105152	A1	4/2015	Bellinghausen et al.	
2016/0228765	A1	8/2016	Rubio	
2017/0354895	A1 *	12/2017	Dornbusch	A63F 13/23
2018/0104574	A1	4/2018	Tager	
2019/0391719	A1	12/2019	Agrawal et al.	
2021/0031098	A1 *	2/2021	Black	A63F 13/2145
2021/0031101	A1 *	2/2021	Black	A63F 13/24

OTHER PUBLICATIONS

U.S. Appl. No. 16/526,238 to Glenn Black, Tomas Bruckbock, and Arthur Kwun entitled "Controller Add-On Device With Customizable Presets", filed Jul. 30, 2019.

U.S. Appl. No. 16/526,261 to Glenn Black, Tomas Bruckbock, and Jason Campbell entitled "Method for Providing Customized Button Mapping Presets", filed Jul. 30, 2019.

U.S. Appl. No. 16/526,293 to Glenn Black, Tomas Bruckbock, and Arthur Kwun entitled "Customizablecontroller Add-On System", filed Jul. 30, 2019.

Non-Final Office Action for U.S. Appl. No. 16/526,238, dated Jun. 18, 2020.

Non-Final Office Action for U.S. Appl. No. 16/526,261, dated Jun. 23, 2020.

Non-Final Office Action for U.S. Appl. No. 16/526,293, dated Jun. 29, 2020.

Design U.S. Appl. No. 29/699,929 to So Morimoto and Arthur Kwun entitled "Controller Add-On Device", filed Jul. 30, 2019.

Non-Final Office Action for U.S. Appl. No. 16/526,261, dated Dec. 28, 2021.

Notice of Allowance for U.S. Appl. No. 16/526,293, dated Dec. 2, 2020.

International Search Report & Written Opinion dated Aug. 31, 2020 for International Patent Application No. PCT/US2020/040181.

International Search Report and Written Opinion dated Sep. 8, 2020 for International Patent Application No. PCT/US2020/040183.

Notice of Allowance for U.S. Appl. No. 16/526,238, dated Nov. 3, 2020.

* cited by examiner

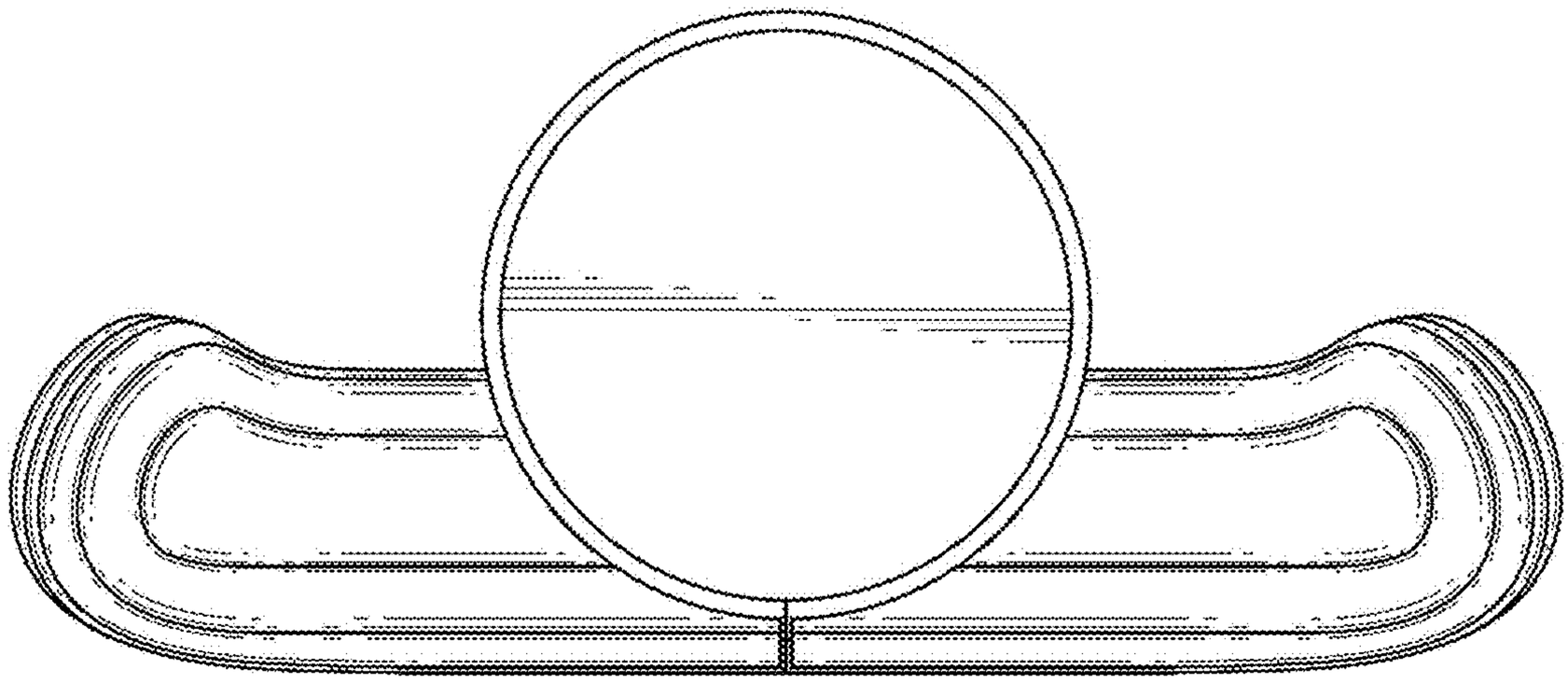

FIG. 1

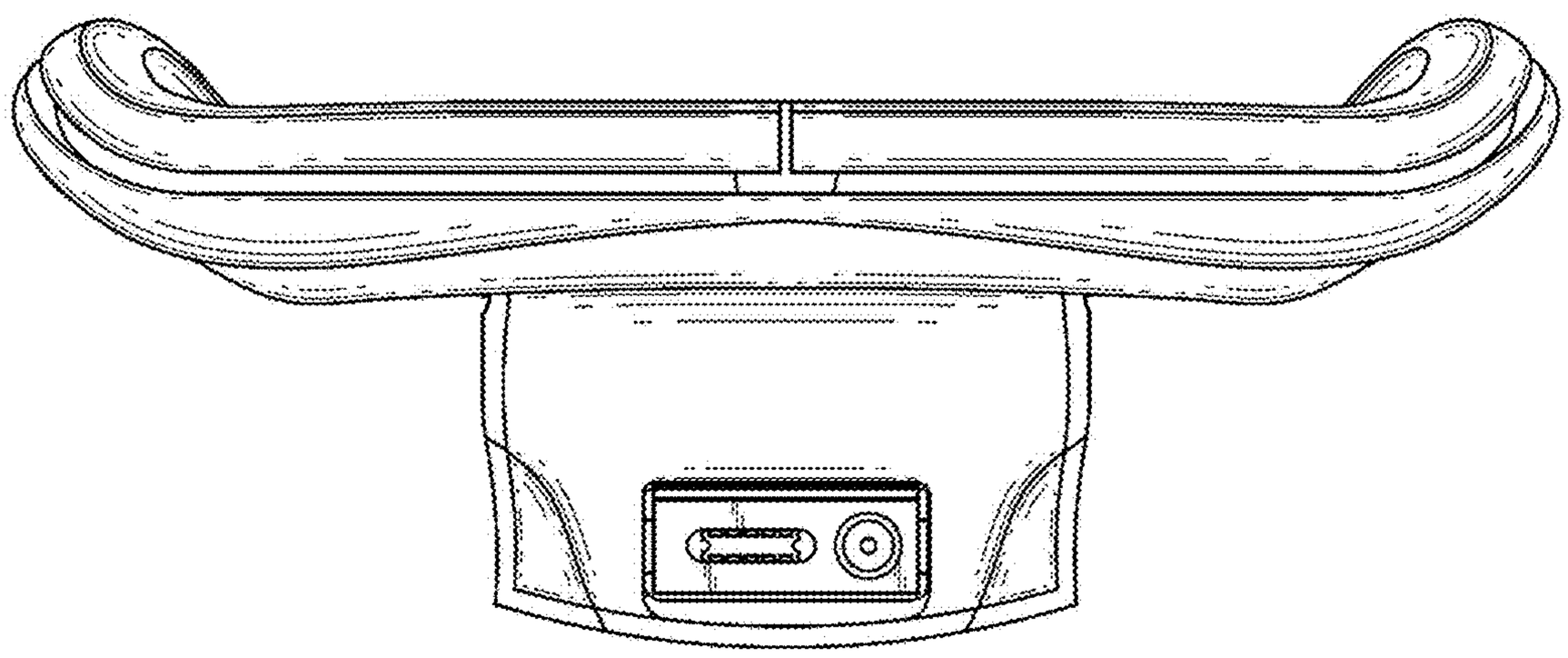

FIG. 2

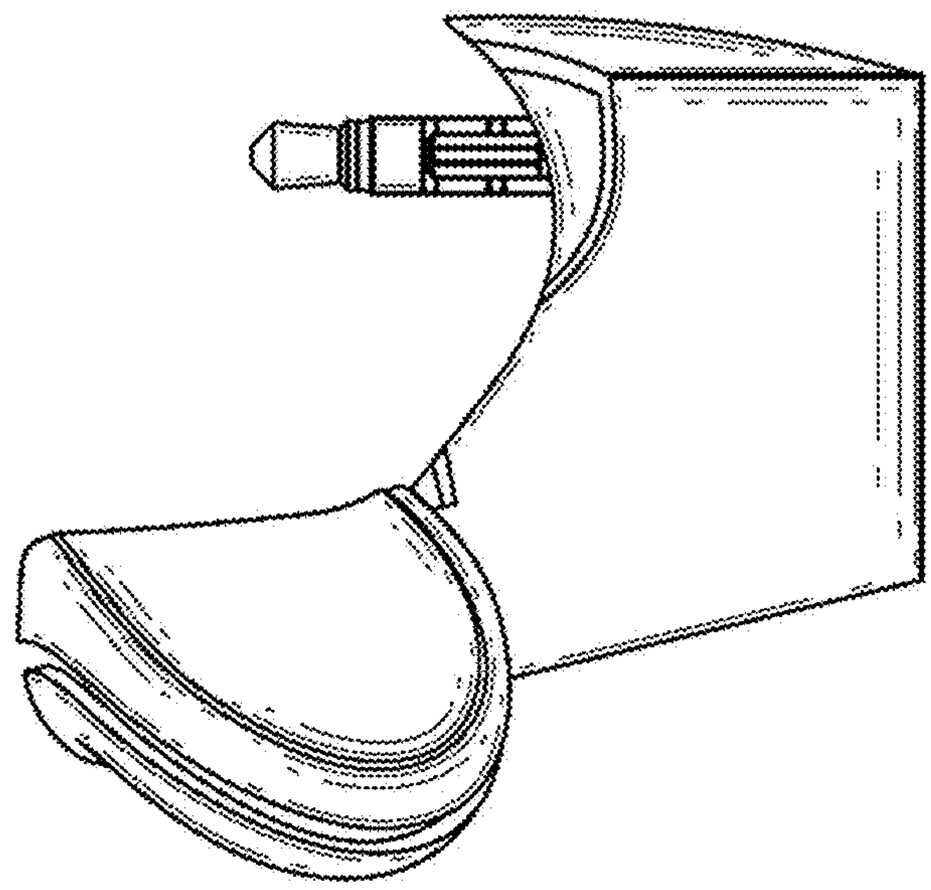

FIG. 3

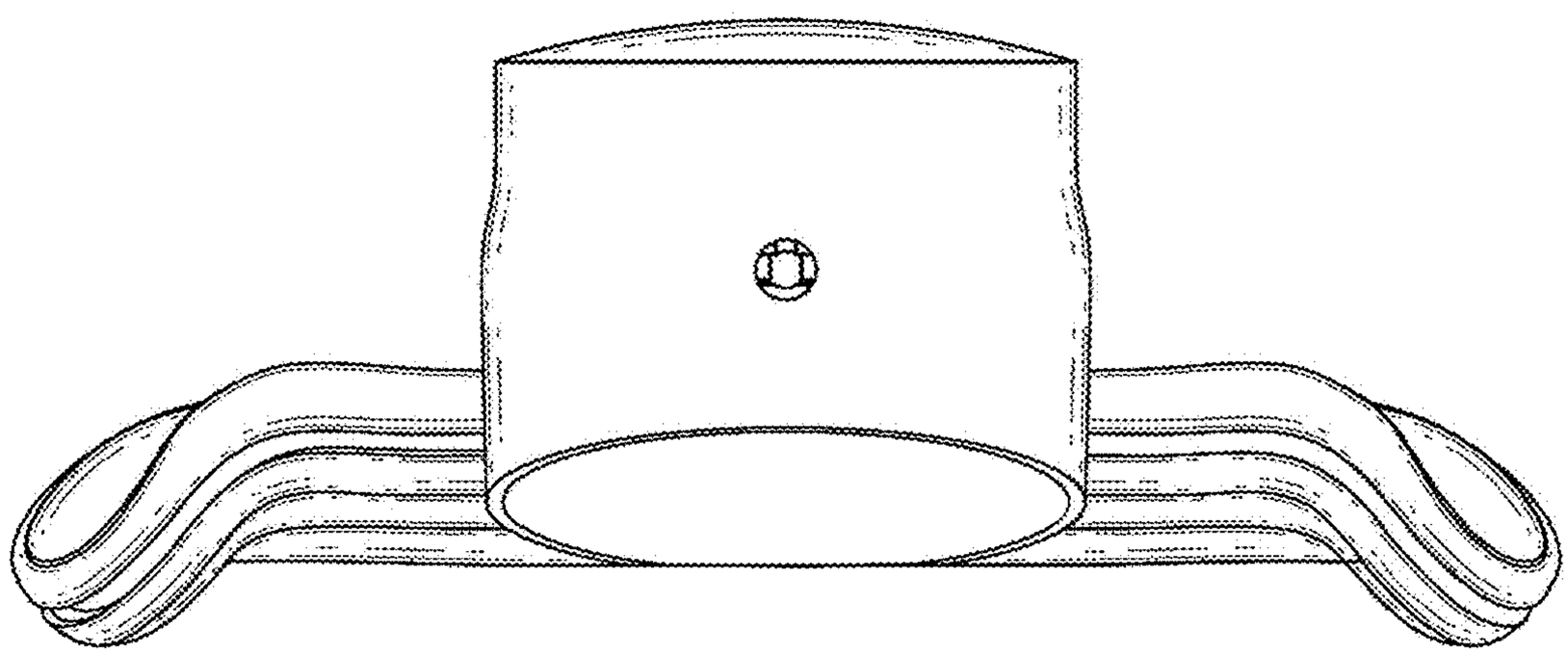

FIG. 4

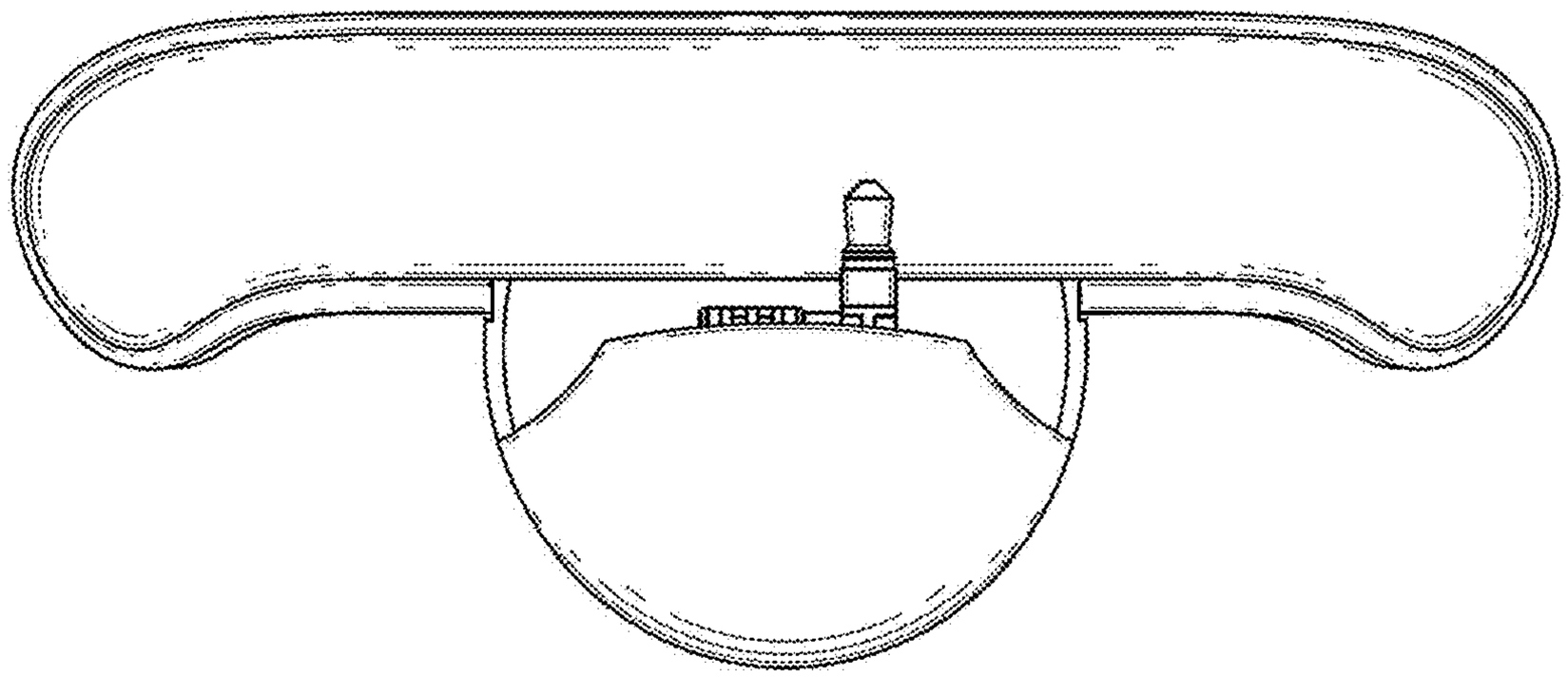

FIG. 5

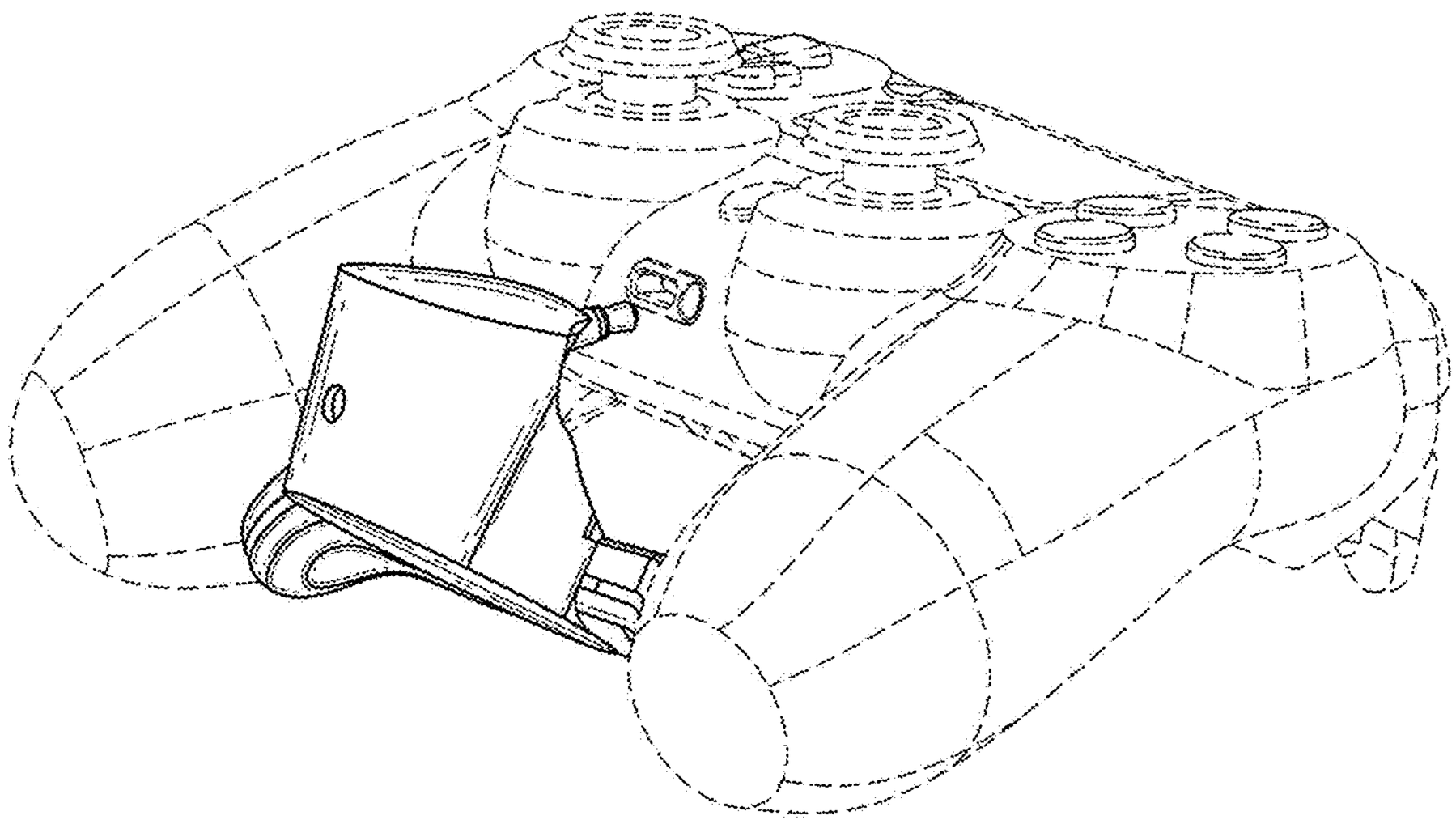

FIG.6

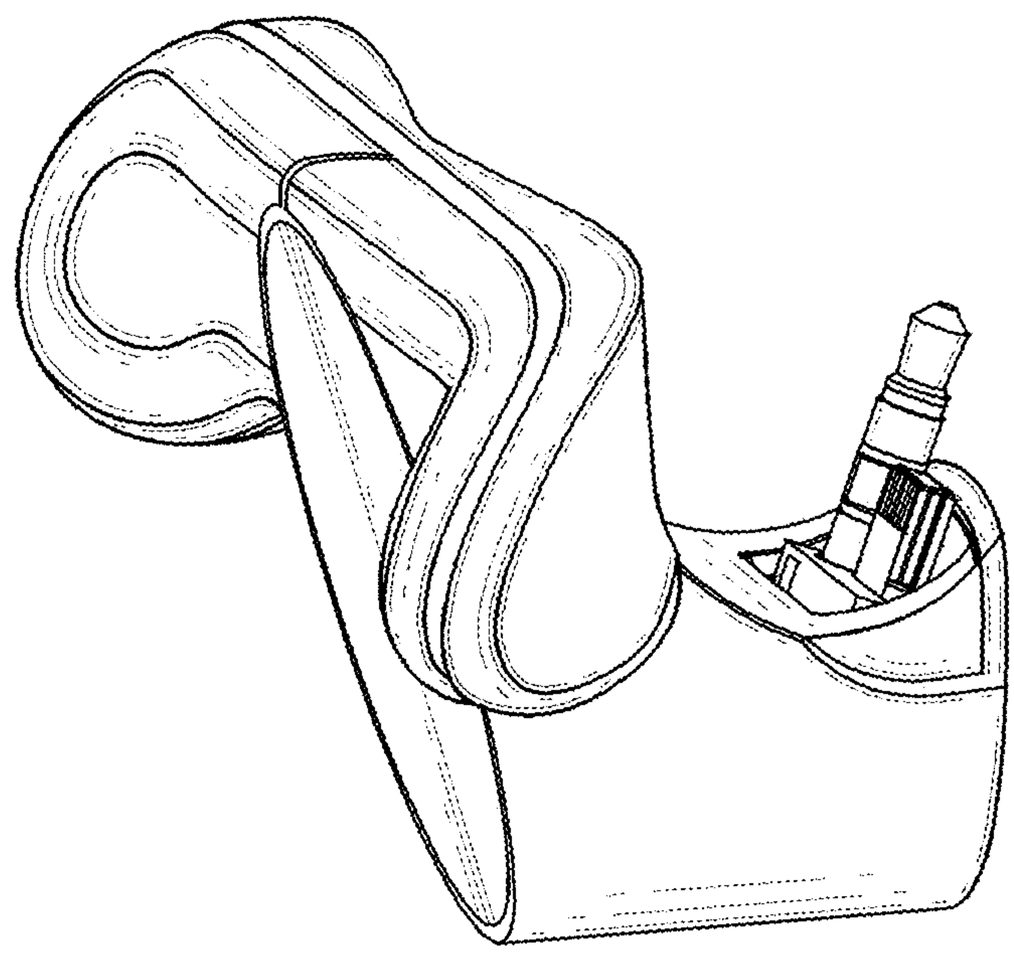

FIG. 7

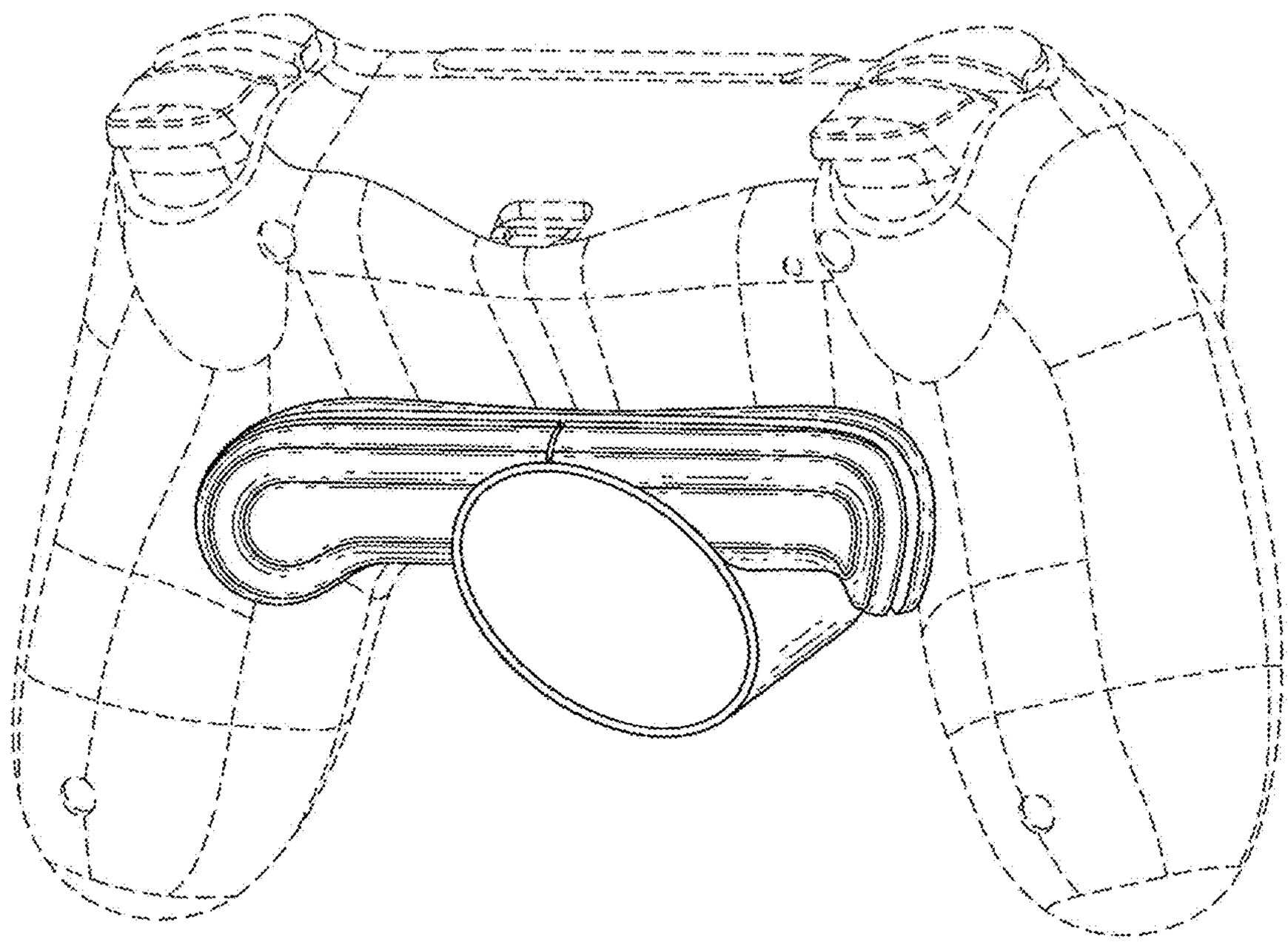

FIG. 8