US00D933774S

(12) United States Design Patent

Wright et al.

(10) Patent No.: US D933,774 S
(45) Date of Patent: ** Oct. 19, 2021

(54) **CLAY PIGEON**

(71) Applicant: **OPCW Holdings Limited**, Chippenham (GB)

(72) Inventors: **Christopher Wright**, Chippenham (GB); **Oliver Paris**, Chippenham (GB)

(73) Assignee: **OPCW Holdings Limited**, Chippenham (GB)

(**) Term: **15 Years**

(21) Appl. No.: **35/509,418**

(22) Filed: **Jan. 17, 2020**

(80) **Hague Agreement Data**

Int. Filing Date: **Jan. 17, 2020**
Int. Reg. No.: **DM/208115**
Int. Reg. Date: **Jan. 17, 2020**
Int. Reg. Pub. Date: **May 22, 2020**

(51) **LOC (13) Cl.** **22-04**

(52) **U.S. Cl.**
USPC **D22/114**

(58) **Field of Classification Search**
USPC D22/100–116, 199; D21/300, 301, 302, D21/306, 334.335, 443, 571, 573–575, D21/746
CPC F41C 23/14; F41C 23/20; F41C 23/04; F41C 23/00; F41C 23/10; F41C 23/06; F41C 27/00; F41C 7/00; F41B 5/00; F41B 5/10; F41B 5/14; F41B 5/0094; F41B 5/1469
See application file for complete search history.

(56) **References Cited**

U.S. PATENT DOCUMENTS

D17,089 S * 2/1887 Hebbard D22/114
D26,600 S * 2/1897 Hannold et al. D22/113
D26,912 S * 4/1897 Parker D22/114
D27,787 S * 10/1897 Barton D22/114
899,123 A * 9/1908 Mills F41J 1/01 273/362
2,250,252 A * 7/1941 Bingham, Jr. F41J 9/16 273/362

(Continued)

FOREIGN PATENT DOCUMENTS

GB 657459 9/1951
WO WO 97/16694 A1 5/1997

OTHER PUBLICATIONS

[Online] @Traptechclays https://www.instagram.com/p/CHJOPmPBV-z/. Posted online Nov. 20, 2020. Retrieved May 7, 2021.*

Primary Examiner — Melanie Pellegrini
(74) *Attorney, Agent, or Firm* — Young Basile Hanlon & MacFarlane, P.C.

(57) **CLAIM**

The ornamental design for a clay pigeon, as shown and described.

DESCRIPTION

1. Clay pigeon
1.1 : Perspective
1.2 : Top
1.3 : Left
1.4 : Bottom
1.5 : Perspective
1.6 : Top
1.7 : Left

Views **1.1** to **1.4** illustrate the clay pigeon in an unilluminated state and views **1.5** to **1.7** illustrate the clay pigeon in an illuminated state; features shown in even broken lines do not form part of the claimed design, and are shown for context only; the radial lines around the boundary of the clay pigeon in views **1.5** to **1.7** illustrate emission of light from the surface of the clay pigeon and show the clay pigeon is lit; the radial lines themselves form no part of the claimed design.

1 Claim, 7 Drawing Sheets

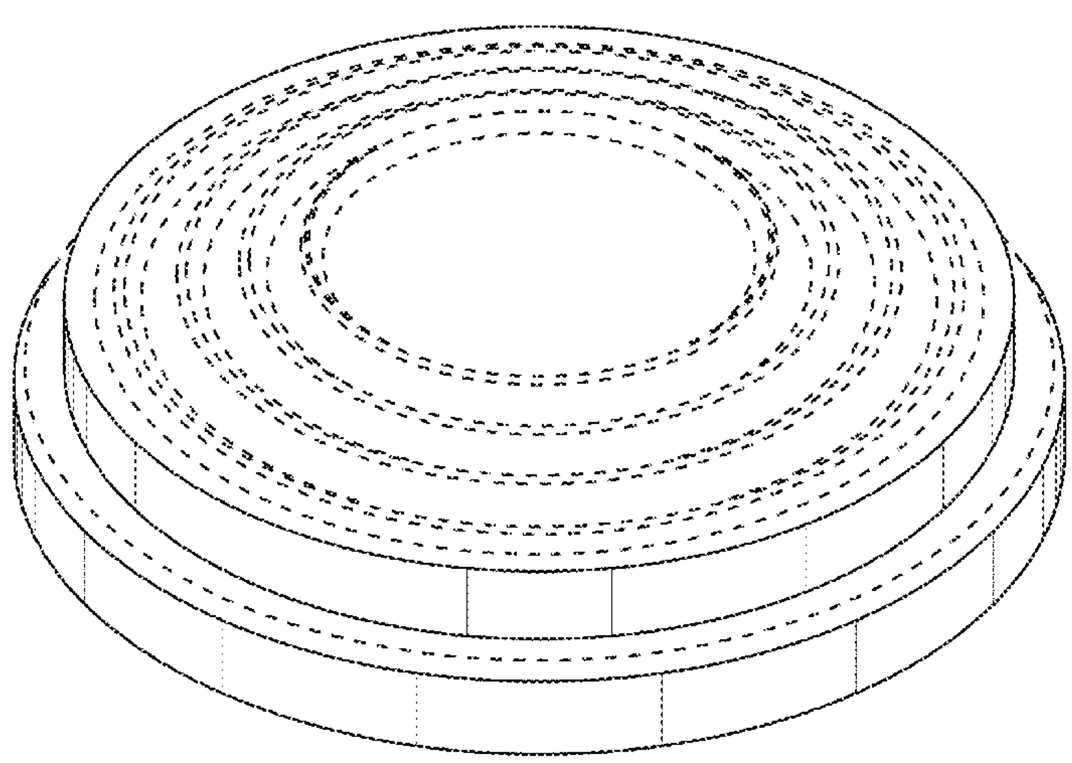

(56) **References Cited**

U.S. PATENT DOCUMENTS

2,418,936	A	*	4/1947	Hutchinson	F41J 9/16 264/235
D160,789	S	*	11/1950	Jordan	D22/114
2,568,279	A		9/1951	Franz et al.	
2,653,026	A	*	9/1953	Feltus	F41J 9/165 273/362
3,502,333	A	*	3/1970	Fleury	F41J 9/165 463/52
D351,450	S	*	10/1994	Maryska	D22/113
D352,988	S	*	11/1994	Jan	D22/119
D355,695	S	*	2/1995	Moore	D22/113
5,467,998	A	*	11/1995	Hellings	F41J 1/01 273/363
D395,483	S	*	6/1998	Maryska	D22/100
5,788,243	A	*	8/1998	Harshaw	C08L 97/02 273/363
D683,516	S	*	6/2013	Elias	D1/106
D725,714	S	*	3/2015	Kim	D21/443
D764,008	S	*	8/2016	Tottel, Sr.	D22/114
D853,521	S	*	7/2019	Evans	D22/114
2014/0083402	A1	*	3/2014	Fridman	F41J 9/18 124/41.1
2015/0137453	A1	*	5/2015	Taylor	F41J 1/01 273/362

* cited by examiner

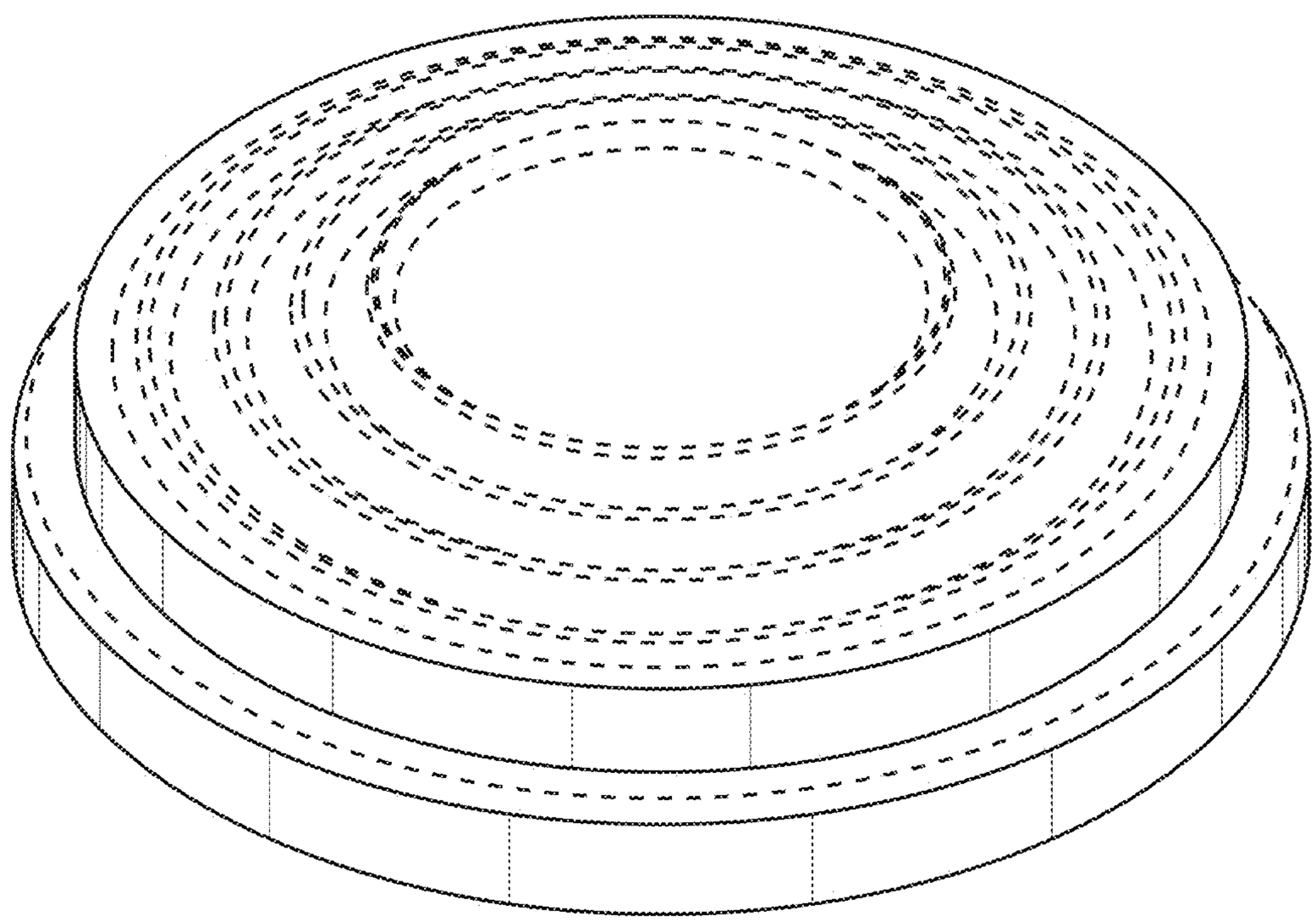

1.1

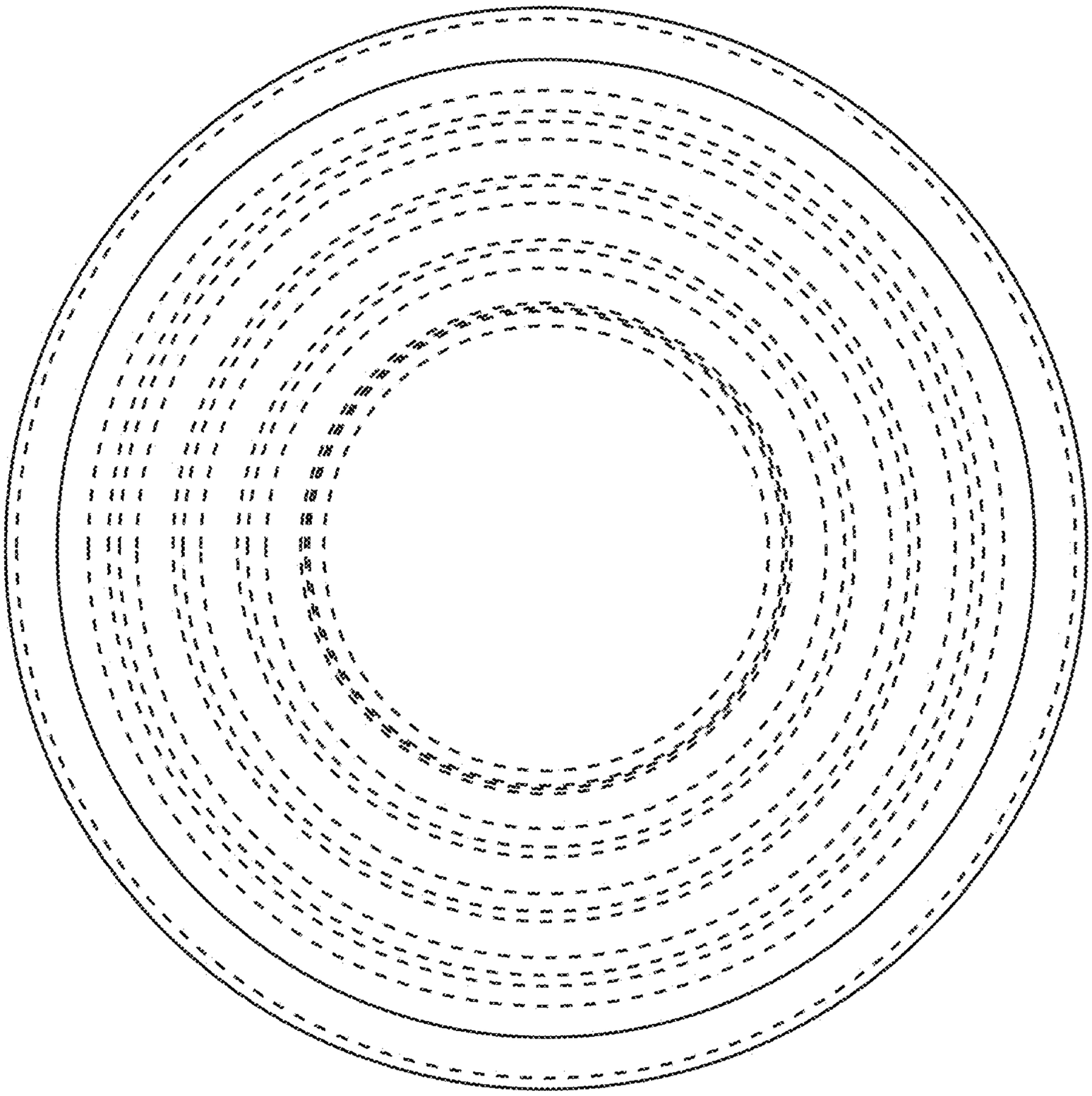

1.2

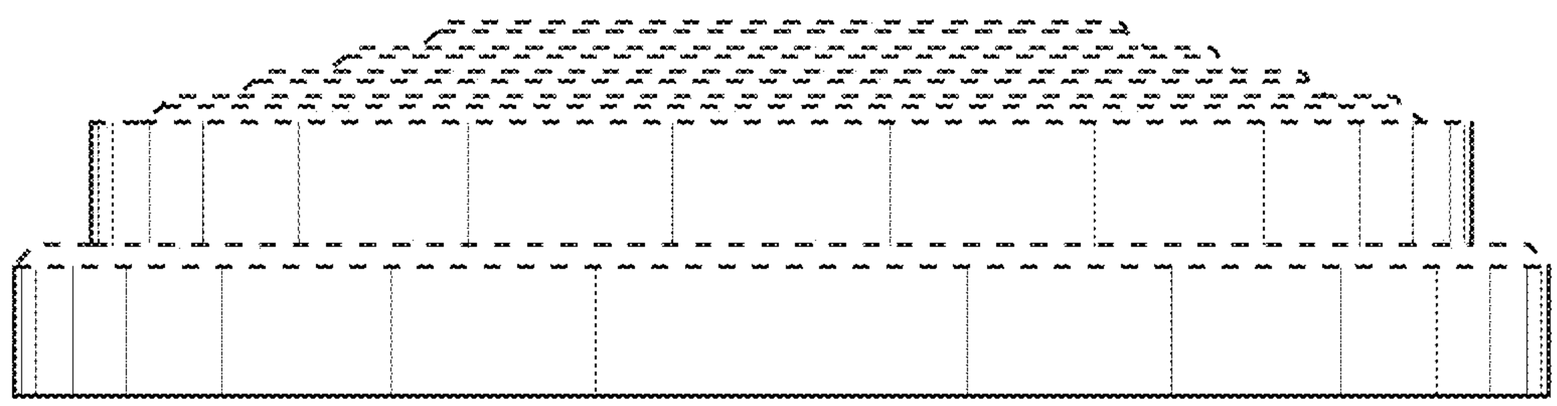

1.3

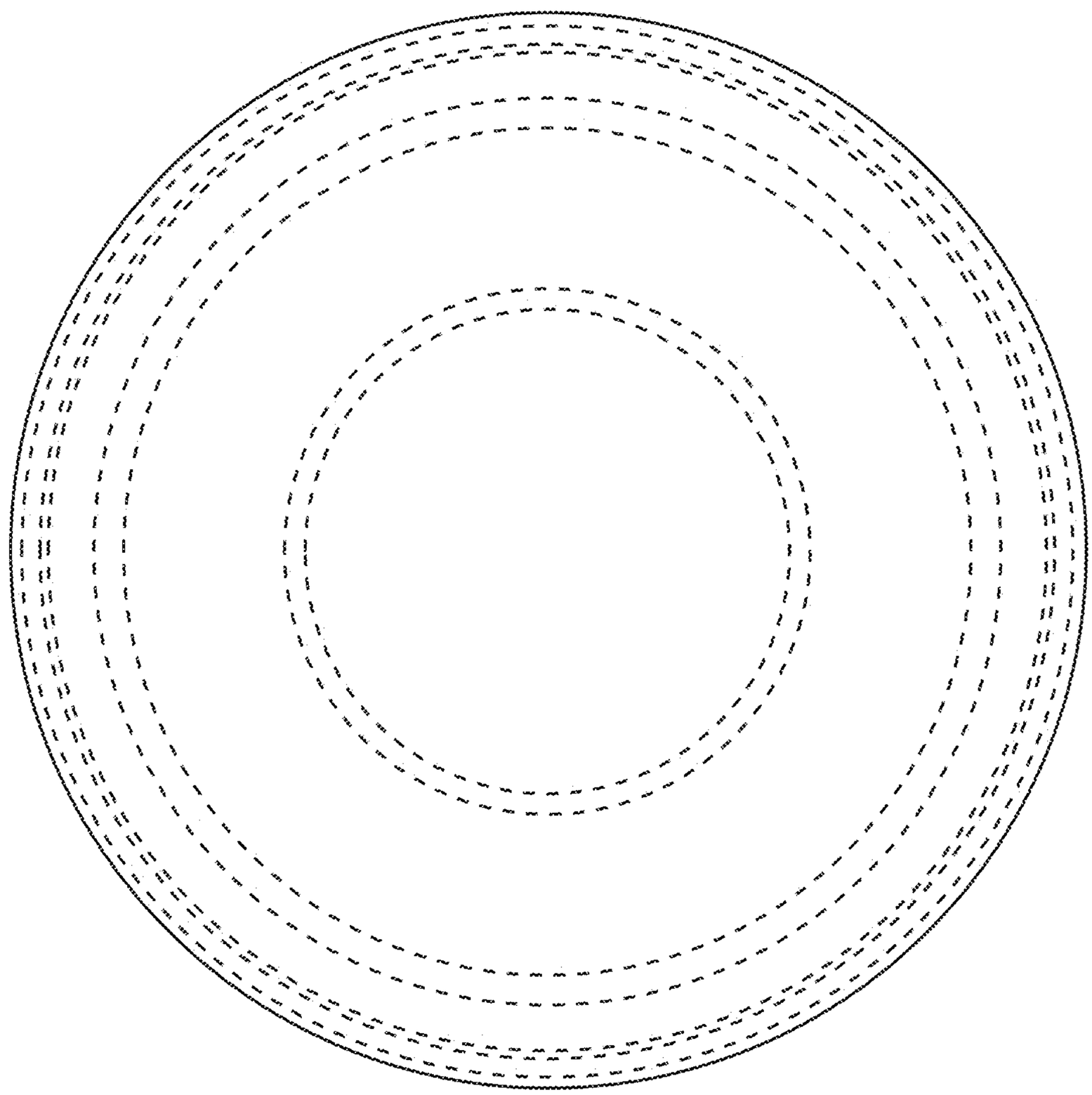

1.4

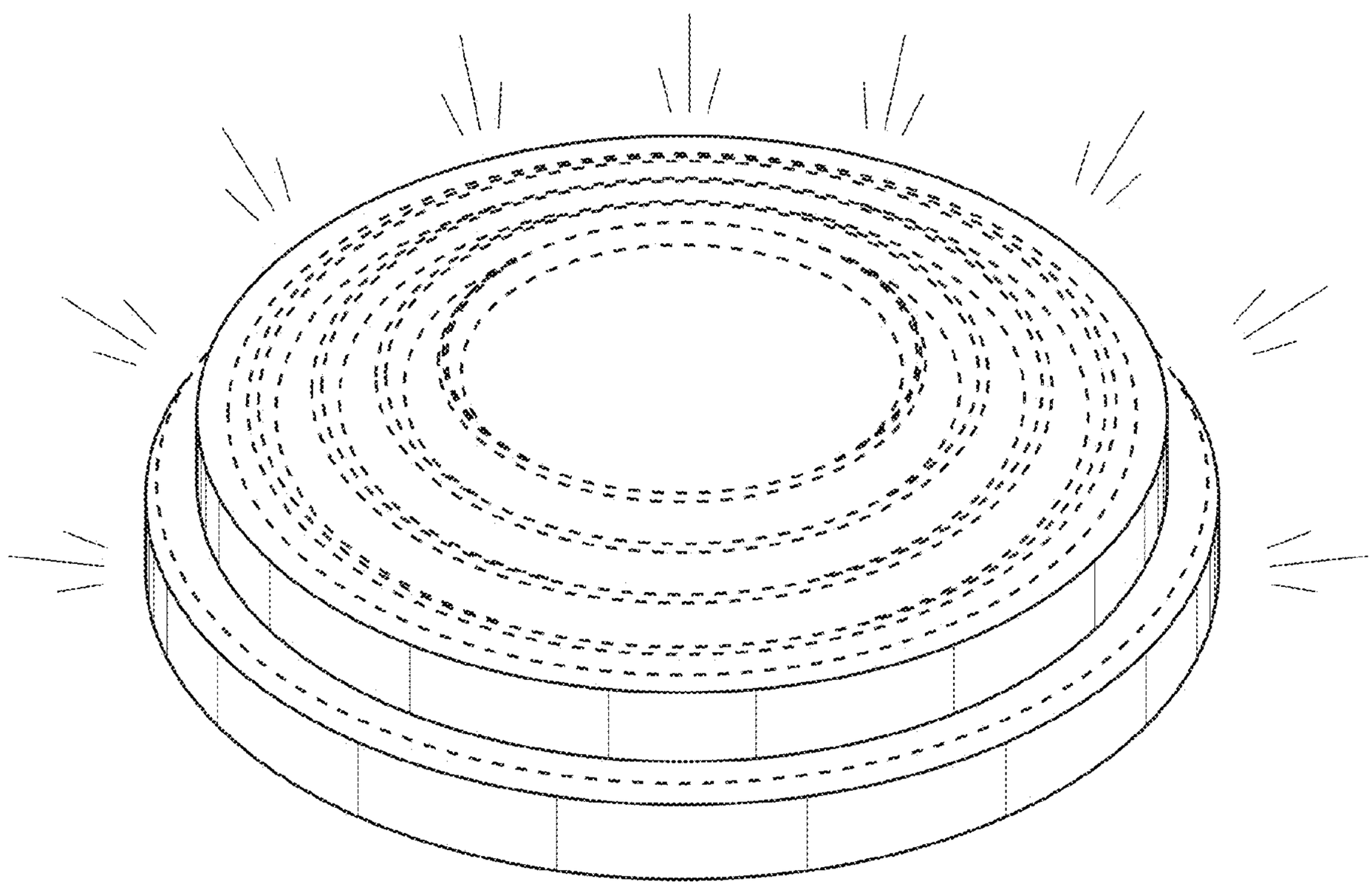

1.5

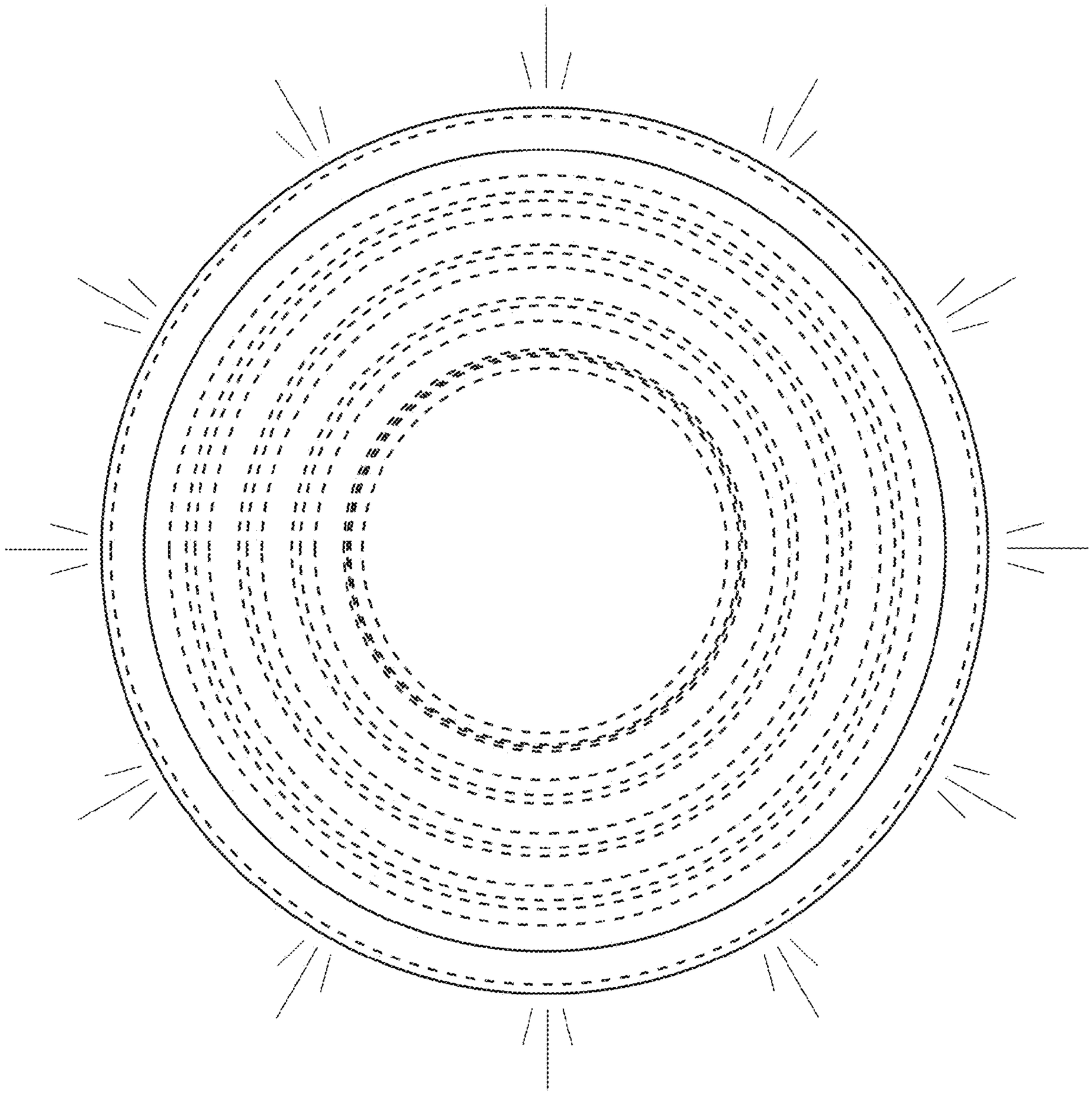

1.6

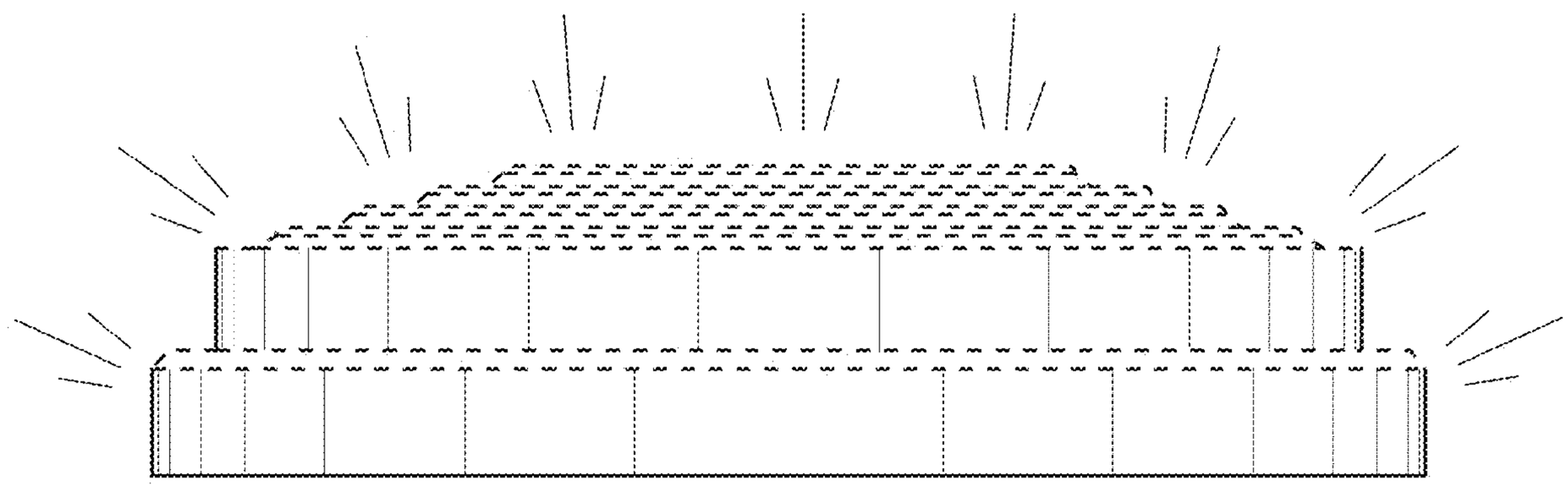

1.7