US00D933034S

(12) United States Design Patent

Kim et al.

(10) Patent No.: US D933,034 S
(45) Date of Patent: ** Oct. 12, 2021

(54) **TELEVISION RECEIVER**

(71) Applicant: **Samsung Electronics Co., Ltd.**, Suwon-si (KR)

(72) Inventors: **Ji-Gwang Kim**, Seoul (KR); **Dongwook Kim**, Seoul (KR); **Jeongwoo Park**, Seoul (KR); **Sang Young Lee**, Seoul (KR); **Su-An Choi**, Seoul (KR)

(73) Assignee: **Samsung Electronics Co., Ltd.**, Suwon-si (KR)

(**) Term: **15 Years**

(21) Appl. No.: **29/689,063**

(22) Filed: **Apr. 26, 2019**

(30) **Foreign Application Priority Data**

Aug. 29, 2018 (KR) 30-2018-0040294
Nov. 15, 2018 (KR) 30-2018-0052947

(51) **LOC (13) Cl.** **14-03**

(52) **U.S. Cl.**
USPC **D14/126**

(58) **Field of Classification Search**
USPC D14/125–137, 230, 238, 239, 250, D14/314–316, 322, 326, 336, 337; D10/65; D6/300

(Continued)

(56) **References Cited**

U.S. PATENT DOCUMENTS

D795,847 S * 8/2017 He D14/230
D860,979 S * 9/2019 He D14/230

(Continued)

FOREIGN PATENT DOCUMENTS

CN 201430392707.2 4/2015
CN 201430509448.7 7/2015

(Continued)

OTHER PUBLICATIONS

Samsung 0900 85-inch 8K QLED TV hands-on review, Oct. 10, 2018 [online], [retrieved Sep. 23, 2020], Retrieved from Internet, URL: <https://www.digitaltrends.com/tv-reviews/samsung-q900-series-qn85q900raf-review/> (Year: 2018).*

(Continued)

Primary Examiner — Barbara Fox
Assistant Examiner — Aram Kwon
(74) *Attorney, Agent, or Firm* — NSIP Law

(57) **CLAIM**

We claim the ornamental design for a television receiver, as shown and described.

DESCRIPTION

FIG. **1** is a front perspective view of a television receiver showing our new design according to a first embodiment;
FIG. **2** is a front view thereof;
FIG. **3** is a rear view thereof;
FIG. **4** is a left-side view thereof;
FIG. **5** is a right-side view thereof;
FIG. **6** is a top view thereof;
FIG. **7** is a bottom view thereof;
FIG. **8** is an enlarged view of the encircled portion in FIG. **1**;
FIG. **9** is another front perspective view of the television receiver in which a stand that fits into the recessed area is provided in dot-dash broken lines to illustrate an example environment;
FIG. **10** is a front perspective view of a television receiver showing our new design according to a second embodiment;
FIG. **11** is a front view thereof;
FIG. **12** is a rear view thereof;
FIG. **13** is a left-side view thereof;
FIG. **14** is a right-side view thereof;
FIG. **15** is a top view thereof;
FIG. **16** is a bottom view thereof;
FIG. **17** is an enlarged view of the encircled portion in FIG. **10**; and,

(Continued)

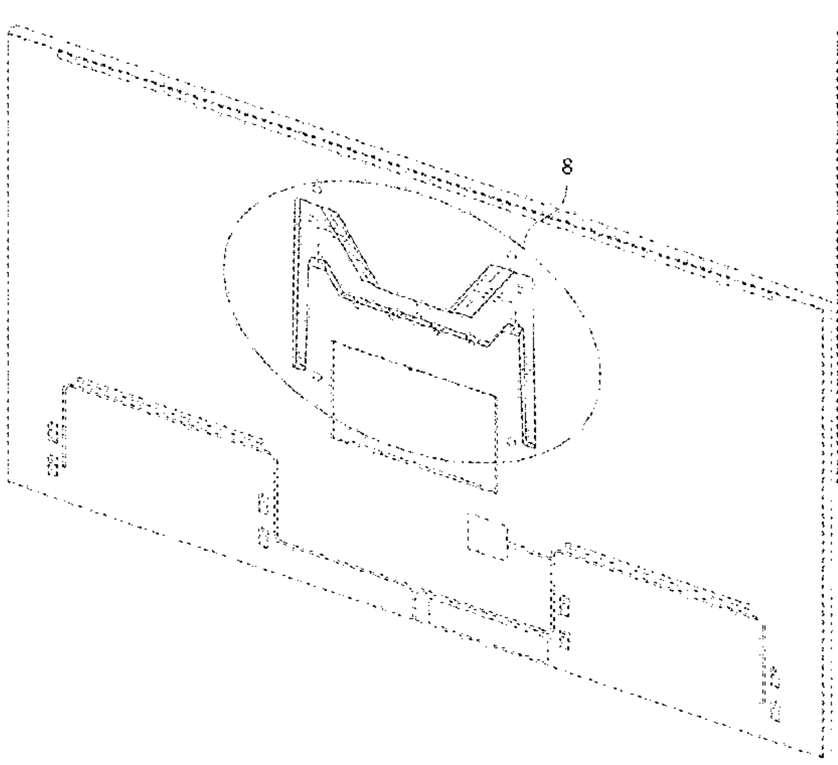

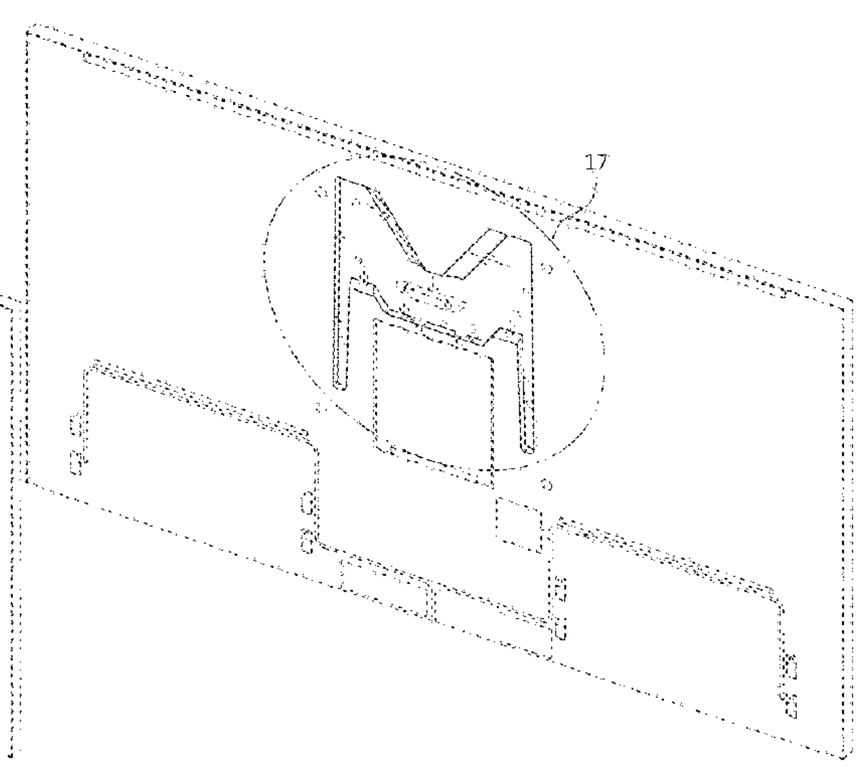

FIG. **18** is another front perspective view of the television receiver in which a stand that fits into the recessed area is provided in dot-dash broken lines to illustrate an example environment.

The broken lines in the figures depict portions of the television receiver which form no part of the claimed design.

The dot-dot-dash broken lines encircling portions of the claimed design that are illustrated in enlargements form no part of the claimed design.

The dot-dash broken lines showing of the stands in FIGS. **9** and **18** are for illustrating environmental structure and form no part of the claimed design.

1 Claim, 14 Drawing Sheets

(58) **Field of Classification Search**
CPC G06F 1/16; G06F 1/1601; G06F 1/1637; H04N 5/64; H05K 5/0204; H05K 5/0017; H05K 5/0217
See application file for complete search history.

(56) **References Cited**

U.S. PATENT DOCUMENTS

D890,734	S *	7/2020	He	D14/230
2018/0035073	A1 *	2/2018	Ma	H04N 5/64

FOREIGN PATENT DOCUMENTS

KR	30-2013-0022911		3/2014
KR	3020180052947	*	6/2019
WO	WOD201596-016	*	8/2019

OTHER PUBLICATIONS

Samsung Q900R 8K QLED TV, Aug. 30, 2018 [online], [retrieved Sep. 23, 2020], Retrieved from Internet, URL: <https://infonicworld.blogspot.com/2018/08/samsung-q900r-8k-qled-tv.html> (Year: 2018).*

TAVR Furniture. "TAVR Universal Table Top TV Stand for Most 27 30 32 37 40 42 47 50 55 60 65 inch Plasma LCD LED Flat or Curved Screen TVs with Height Adjustment, VESA Patterns up to 800mm×400mm, 88Lbs,UT3001" [2017] www.amazon.com Mar. 27, 2017 <https://www.amazon.com/TAVR-Universal Plasma-Curved-Patterns/dp/B06XW7MLB4/ref=pd_sbs_23_21?_encoding=UTF8&pd_rd_i=B06XW7MLB4&pd_rd_r=GEZAXBETPFQRG0DXHJVW&pd_rd_w=kB0fb&pd_rd_wg=N0oVp&psc_32 1&refRID=GEZAXBETPFQRG0DXHJVW>.

FITUEYES "FITUEYES Universal Table Top TV Stand/Base VESA Pedestal Mount fits 23" to 60" LED LCD Flat Screen TV with Height Adjustment TT07201MB" [2017] www.amazon.com Feb. 19, 2017 <https://www.amazon.com/FITUEYES-Universal-Pedestal-Adjustment-TT07201MB/dp/B06WRW8QXC/ref=pd_sbs_23_18?_encoding=UTF8&pd_rd_i=B06WRW8QXC&pd_rd_r=GEZAXBETPFQRG0DXHJVW&pd_rd_w=kB0fb&pd_rd_wg=N0oVp&psc=1&refRID=GEZAXBETPFQRG0DXHJVW>.

* cited by examiner

FIG. 1

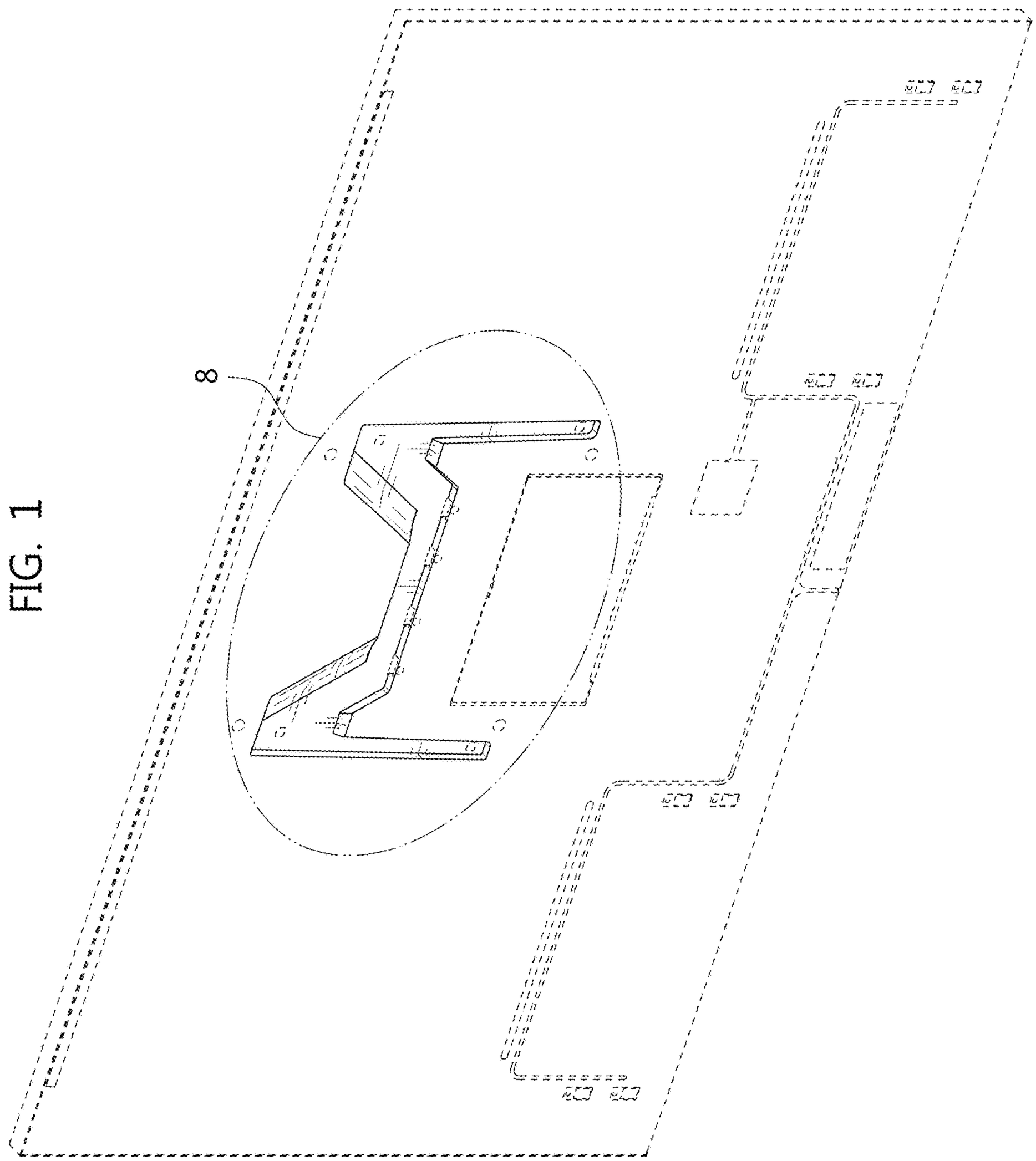

FIG. 2

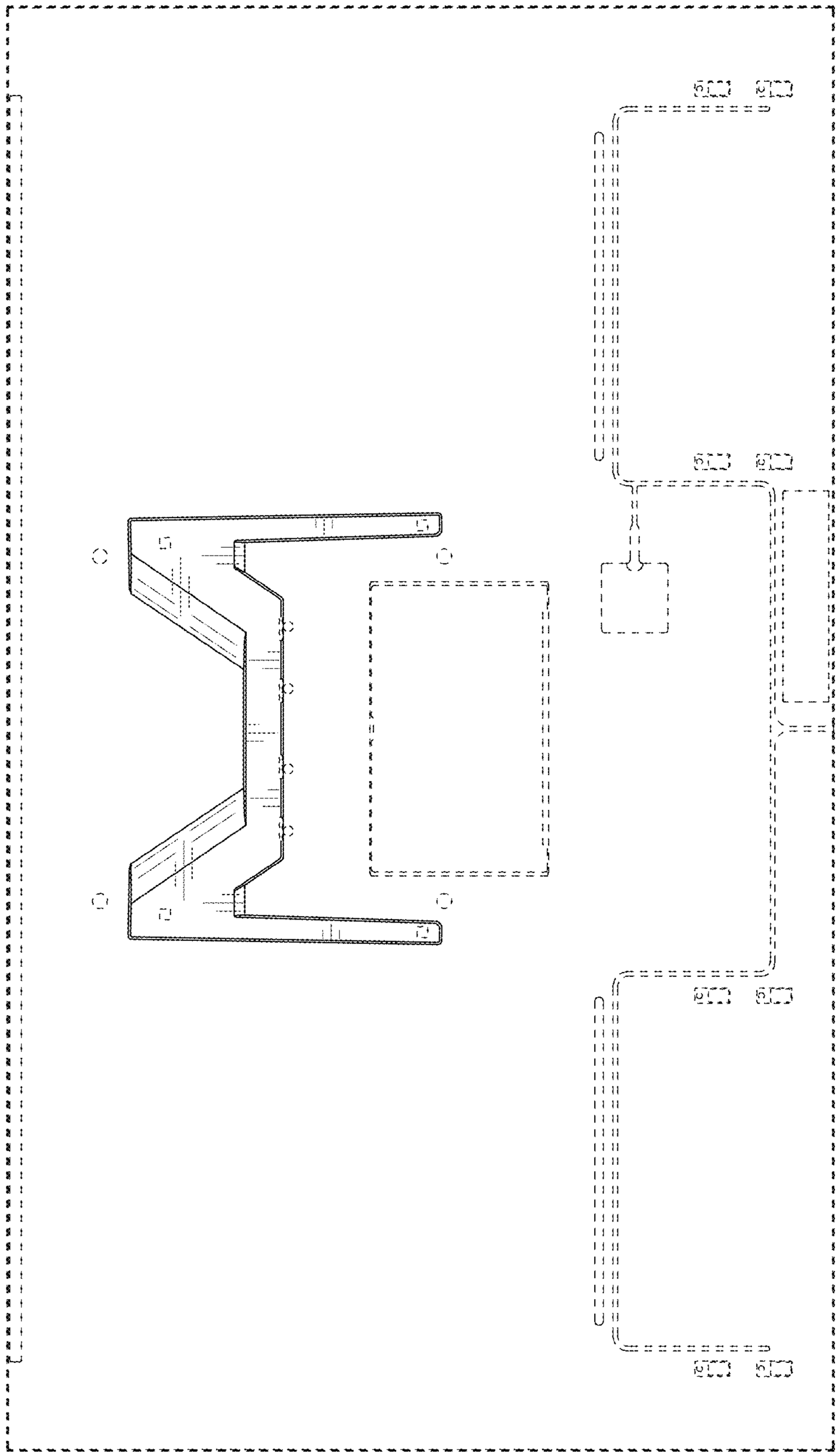

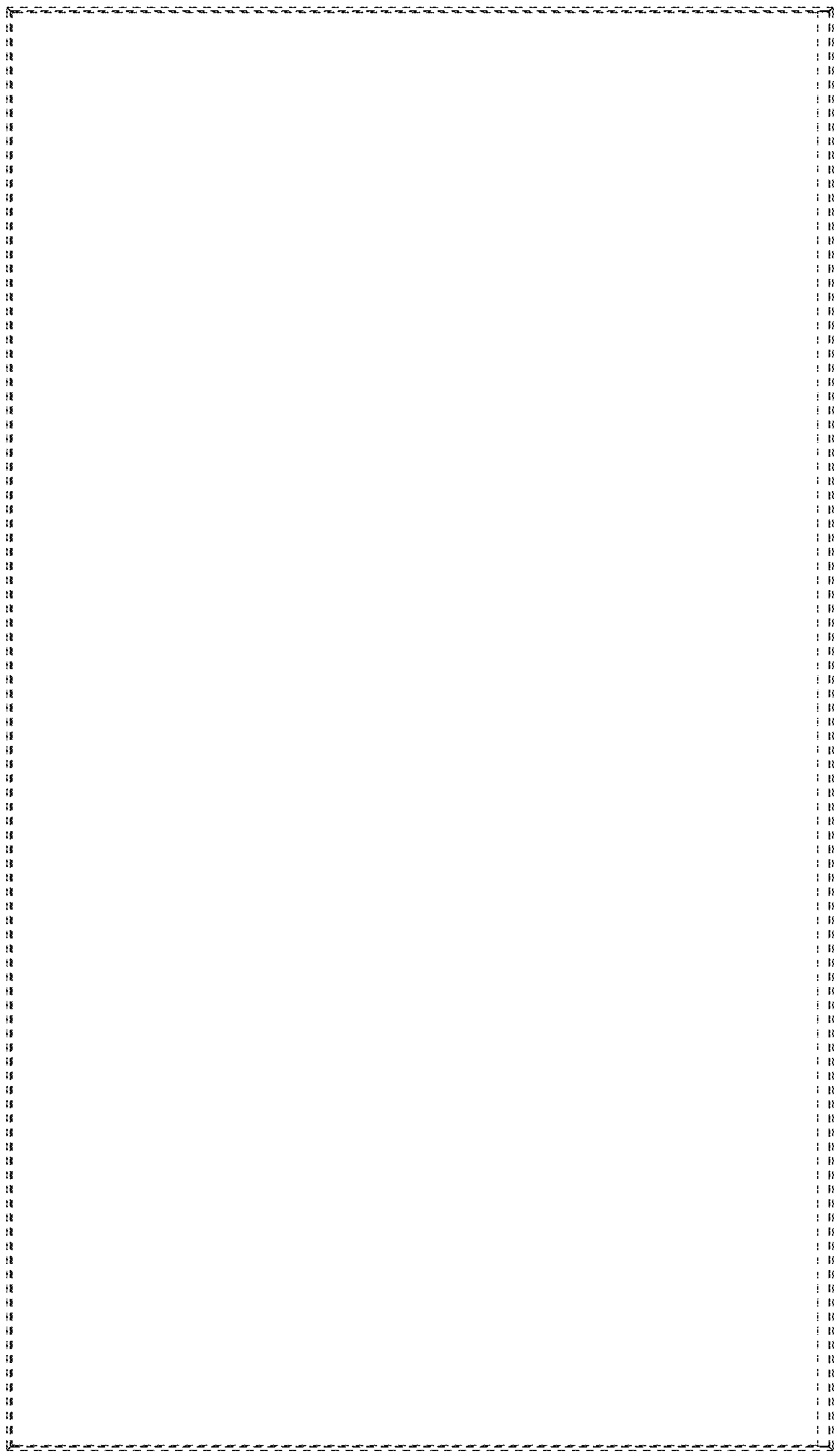

FIG. 3

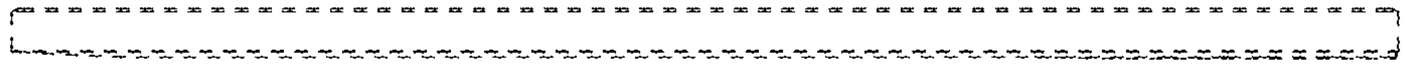

FIG. 5

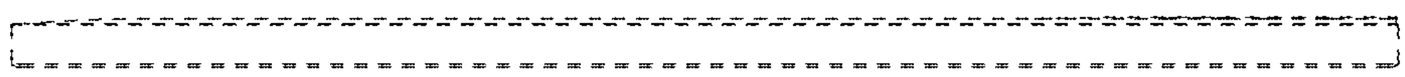

FIG. 4

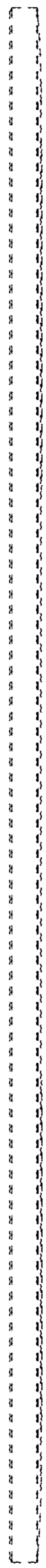

FIG. 6

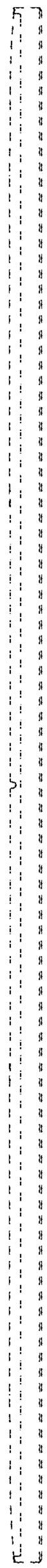

FIG. 7

FIG. 8

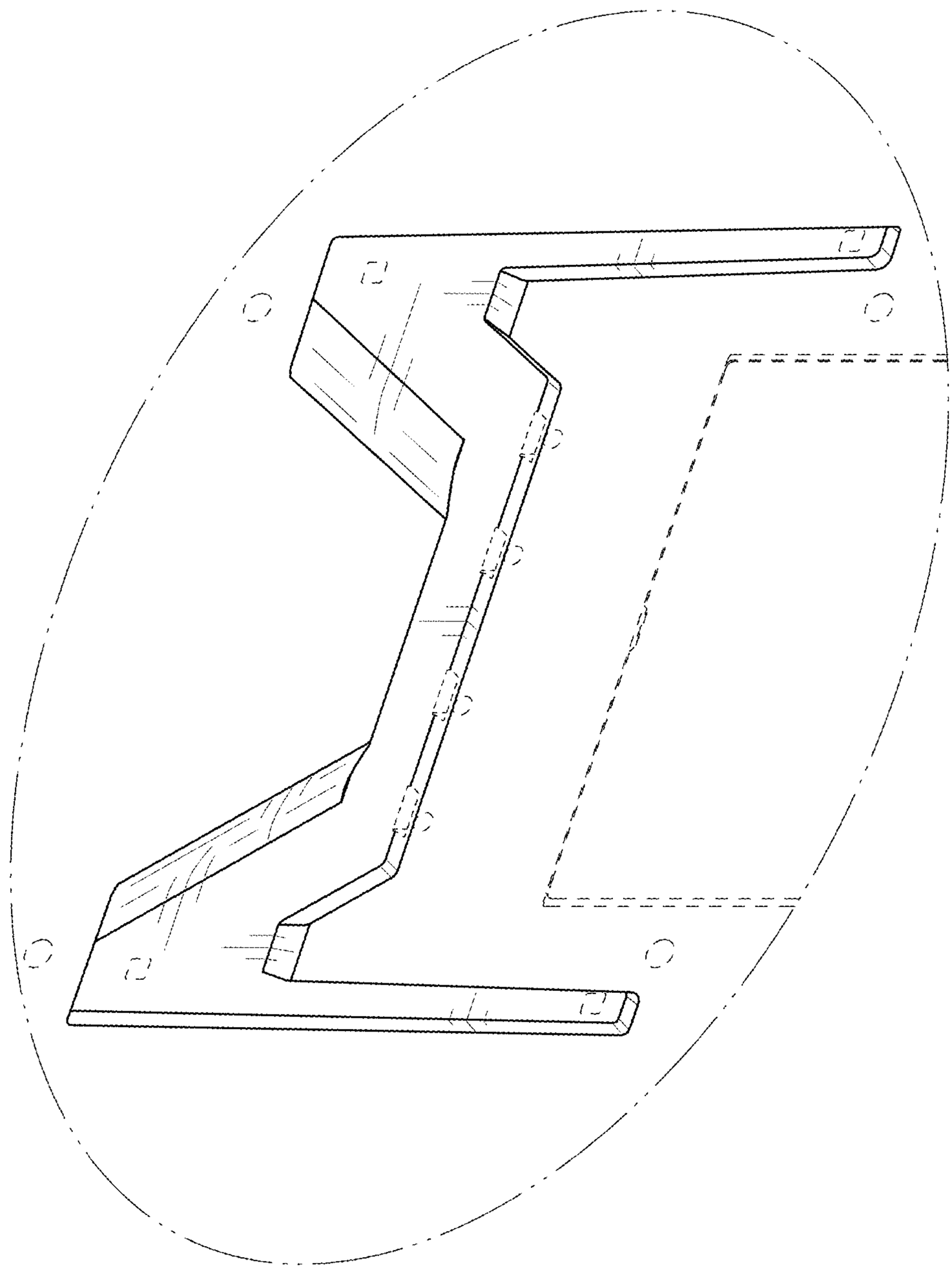

FIG. 9

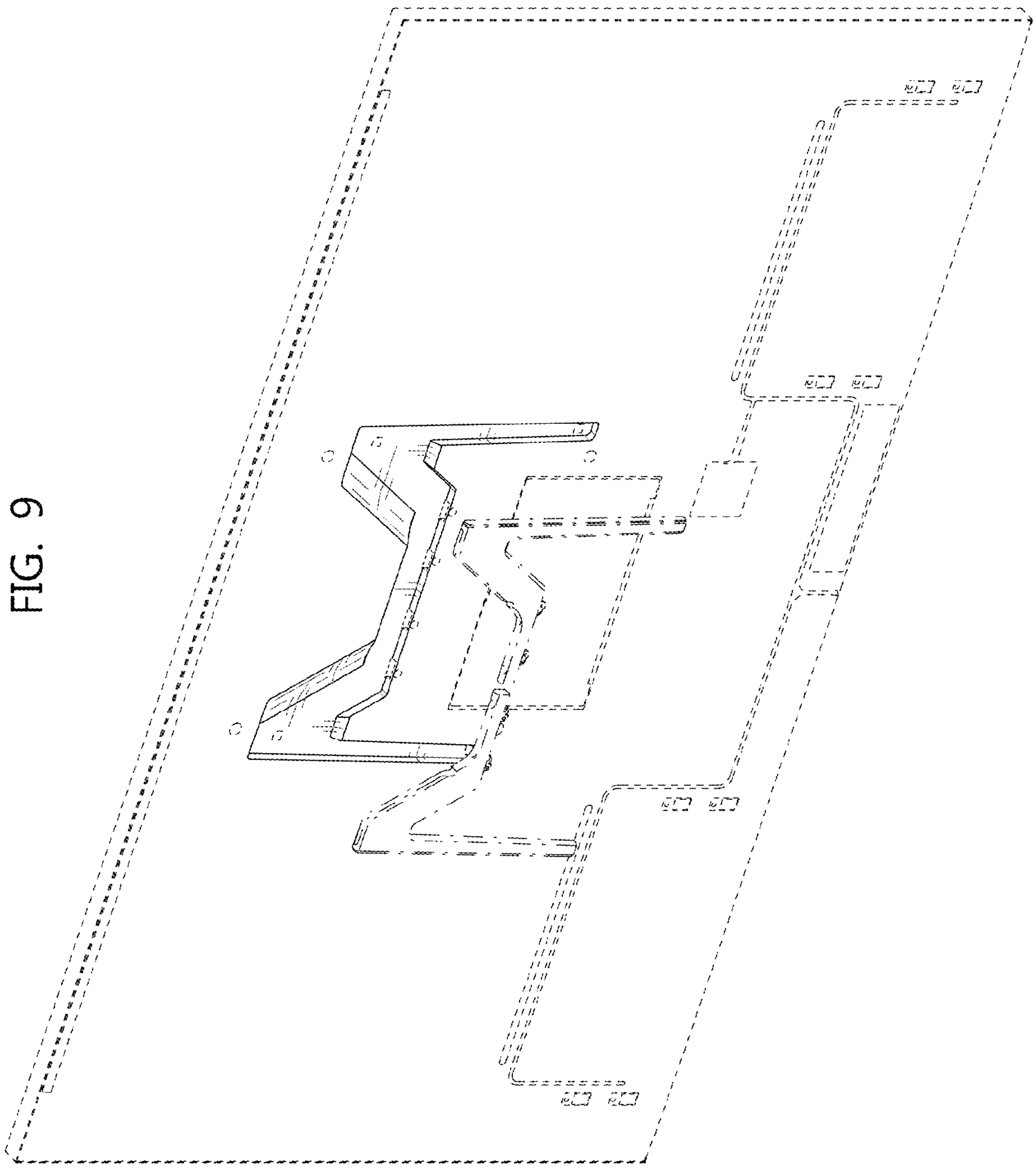

FIG. 10

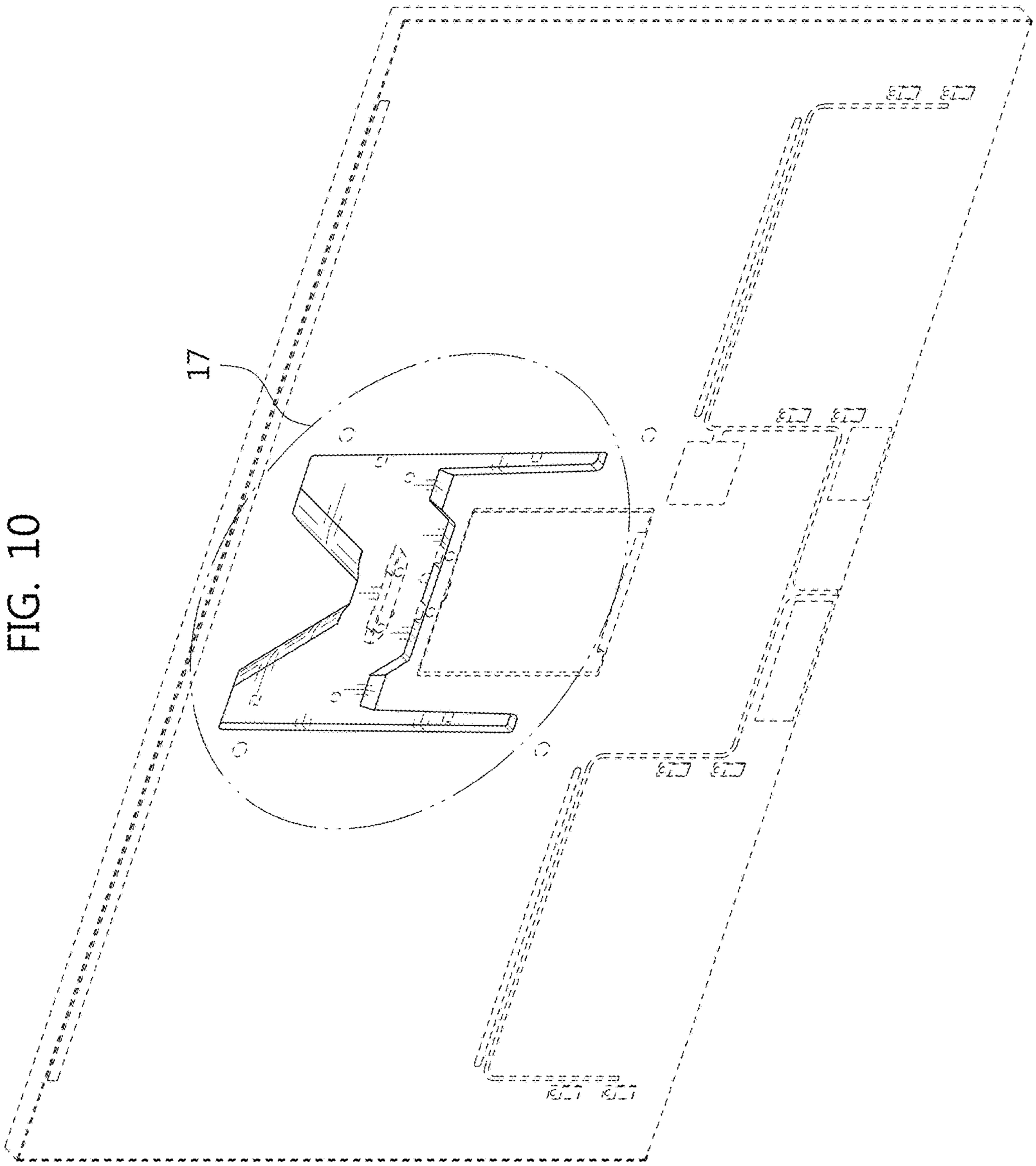

FIG. 11

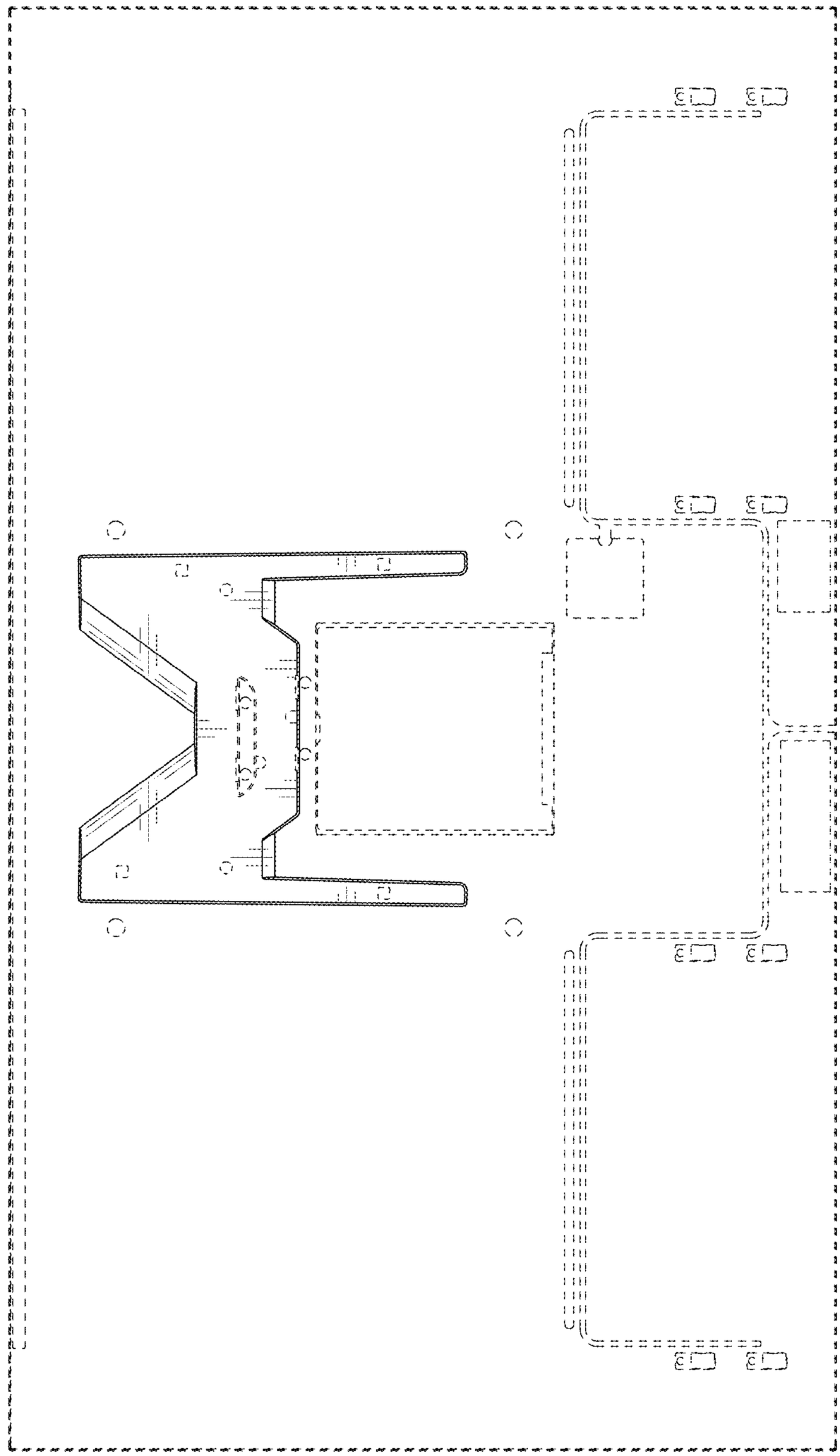

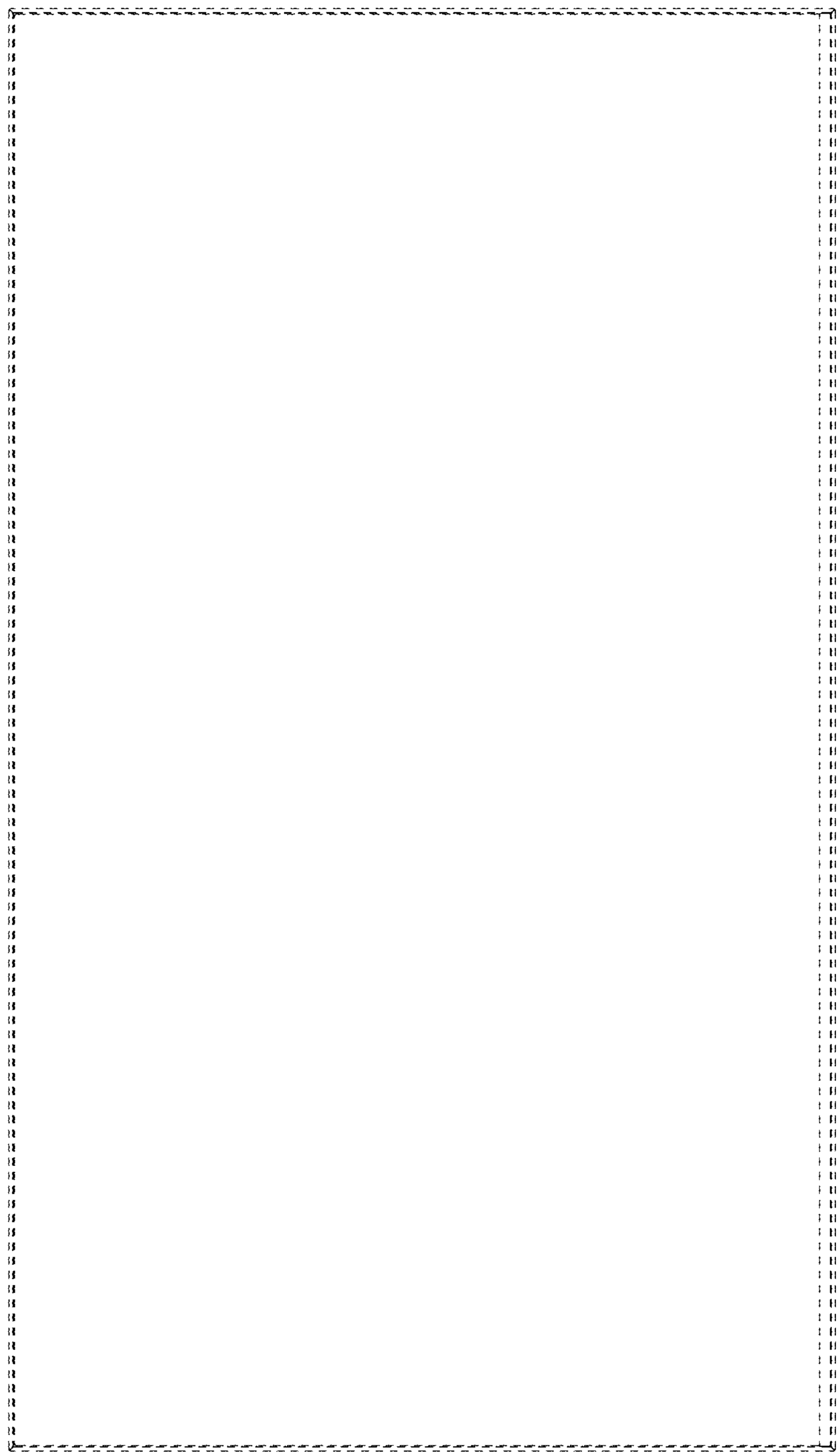

FIG. 12

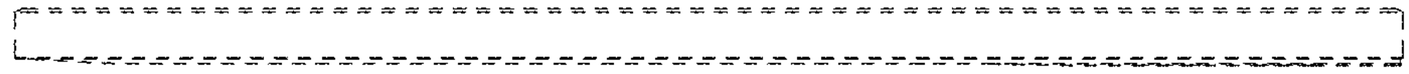

FIG. 14

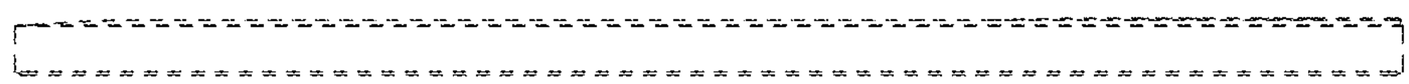

FIG. 13

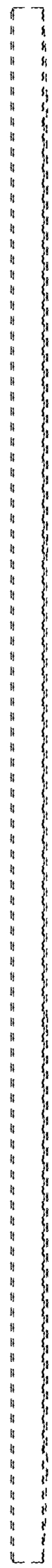

FIG. 15

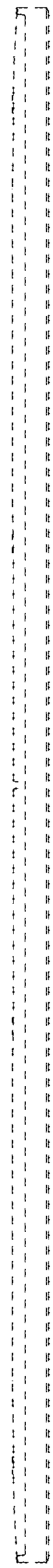

FIG. 16

FIG. 17

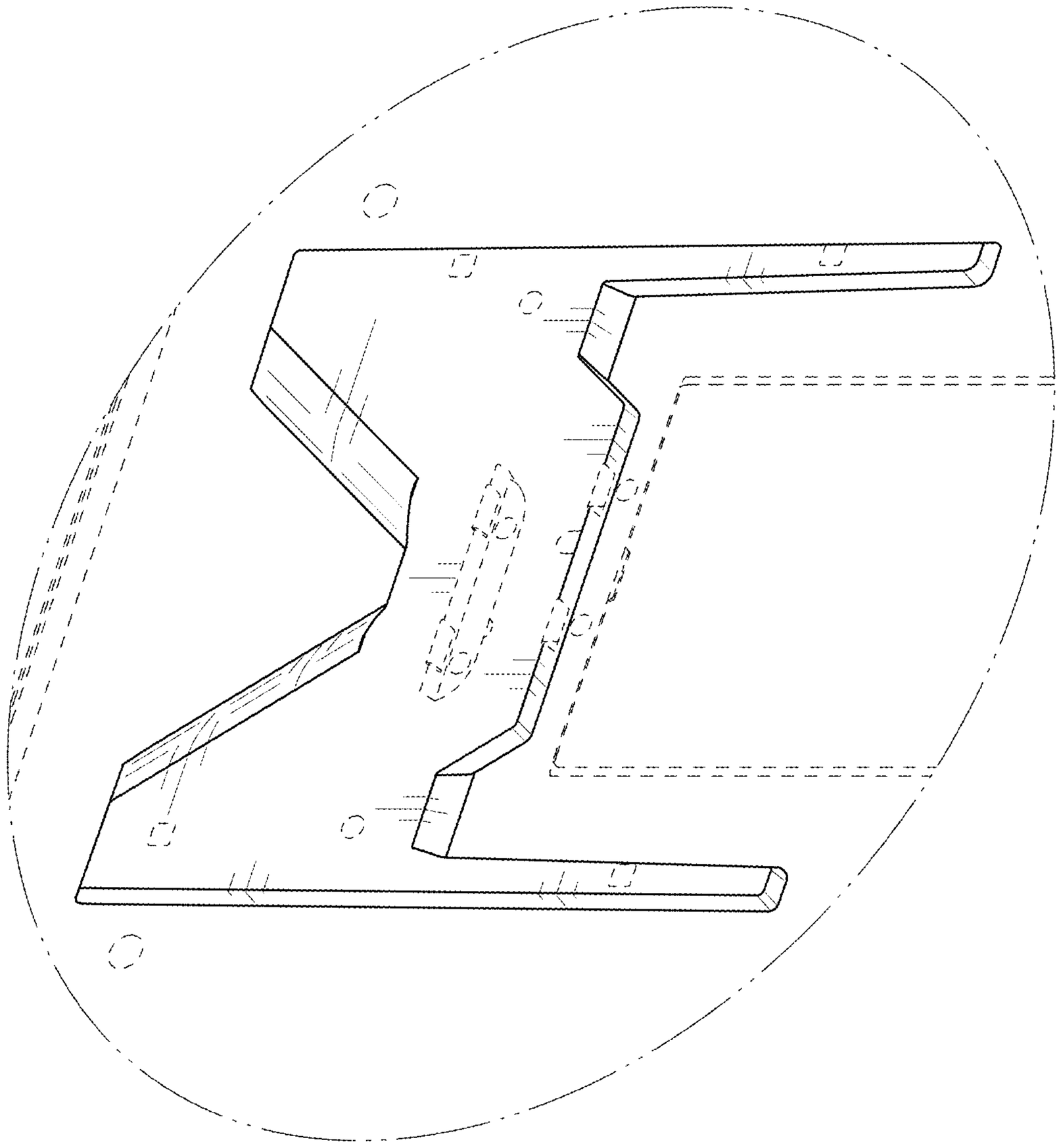
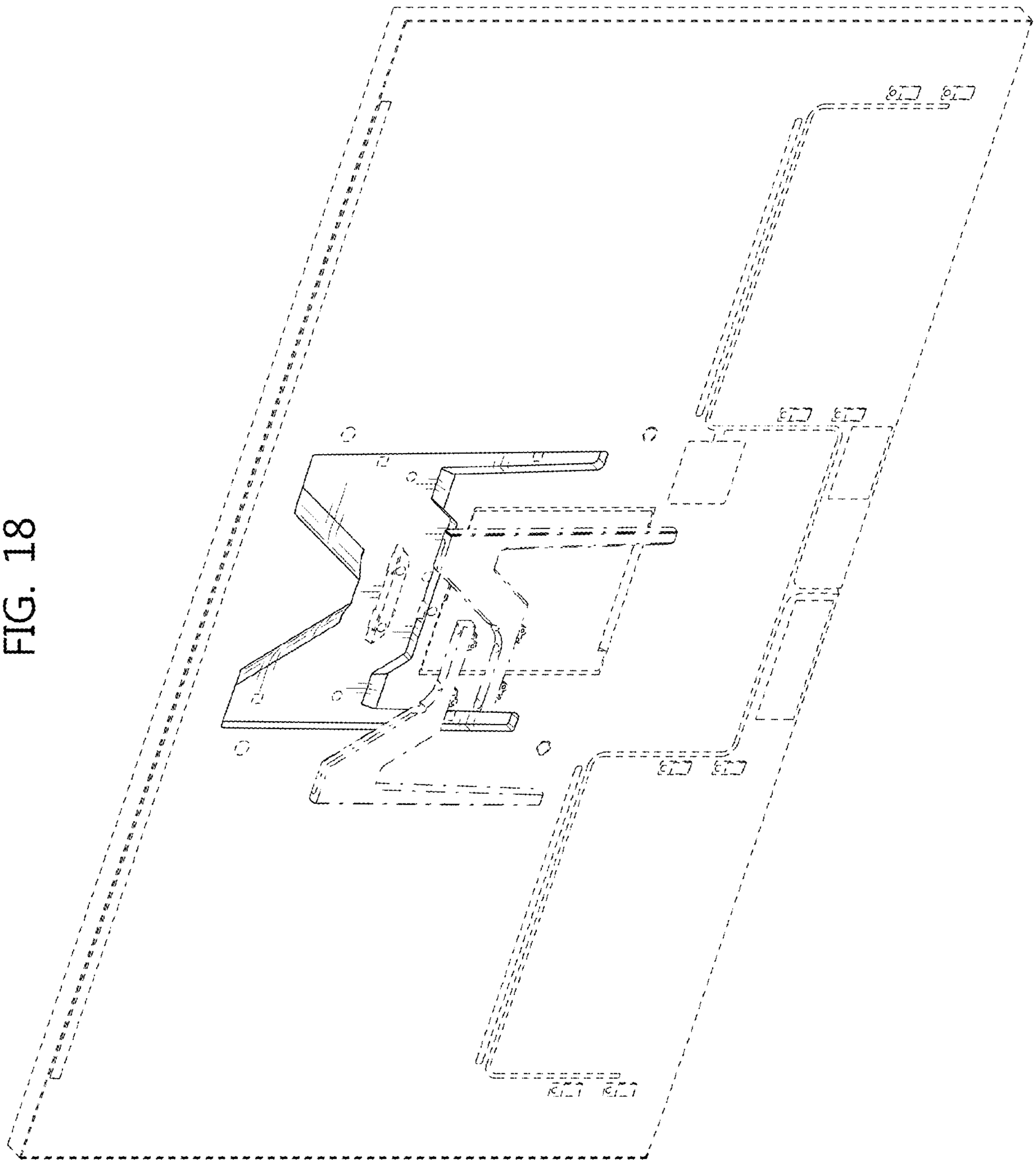
FIG. 18