US00D932901S

(12) United States Design Patent
Ventresca

(10) Patent No.: US D932,901 S
(45) Date of Patent: ** Oct. 12, 2021

(54) **HAND-HELD FLUID SPRAY DEVICE**

(71) Applicant: **Paul Sung Ventresca LLC**, Somerville, MA (US)

(72) Inventor: **Paul Sung Ventresca**, Somerville, MA (US)

(73) Assignee: **Paul Sung Ventresca LLC**, Somerville, MA (US)

(**) Term: **15 Years**

(21) Appl. No.: **29/709,936**

(22) Filed: **Oct. 18, 2019**

Related U.S. Application Data

(63) Continuation of application No. 16/518,219, filed on Jul. 22, 2019, now Pat. No. 10,974,265.

(51) **LOC (13) Cl.** **09-01**

(52) **U.S. Cl.**
USPC **D9/523**

(58) **Field of Classification Search**
USPC D23/356, 359–360, 366; D9/527–528, D9/540, 544–546, 523, 549, 562, 569; D29/126
CPC A61M 11/005; A61M 15/0085; A61M 11/00; A61M 16/14; A61M 11/02; A61M 15/00; A61M 15/0001; A61M 15/001
See application file for complete search history.

(56) **References Cited**

U.S. PATENT DOCUMENTS

3,786,963	A	1/1974	Metzler, III	
D250,353	S *	11/1978	Avant	D29/126
5,009,342	A	4/1991	Lawrence et al.	
5,152,461	A	10/1992	Proctor	
5,213,264	A	5/1993	Styne	
5,332,158	A	7/1994	Styne et al.	
5,377,872	A *	1/1995	Mauney	A62C 13/68 137/197
5,402,916	A	4/1995	Nottingham et al.	
5,439,141	A	8/1995	Clark	
5,472,119	A	12/1995	Park et al.	
5,560,545	A	10/1996	Grogan et al.	
5,626,259	A	5/1997	Maas et al.	
6,550,694	B1	4/2003	Foster	
6,843,390	B1	1/2005	Bristor	
9,925,550	B2	3/2018	Dring et al.	

(Continued)

OTHER PUBLICATIONS

Oil Bottle Prototype, Jan. 6, 2019, paulsungbrands.com, Jun. 2, 2019, URL: https://paulsungbrands.com/a-bottle-for-all-your-essential-oils/ (Year: 2019).*

(Continued)

Primary Examiner — Jack Reickel
Assistant Examiner — Keith J Wilson
(74) *Attorney, Agent, or Firm* — John Brooks Law LLC; John J. Brooks, III

(57) **CLAIM**

I claim the ornamental design for a hand-held fluid spray device, as shown.

DESCRIPTION

FIG. **1** shows a top perspective view of a hand-held fluid spray device showing my new design;
FIG. **2** is a front elevational view thereof;
FIG. **3** is a rear elevational view thereof;
FIG. **4** is a right side elevational view thereof;
FIG. **5** is a left side elevational view thereof;
FIG. **6** is a top plan view thereof; and,
FIG. **7** is a bottom plan view thereof.
The broken line showing of a fluid spray device is included for the purpose of illustrating portions of the article and forms no part of the claimed design.

1 Claim, 7 Drawing Sheets

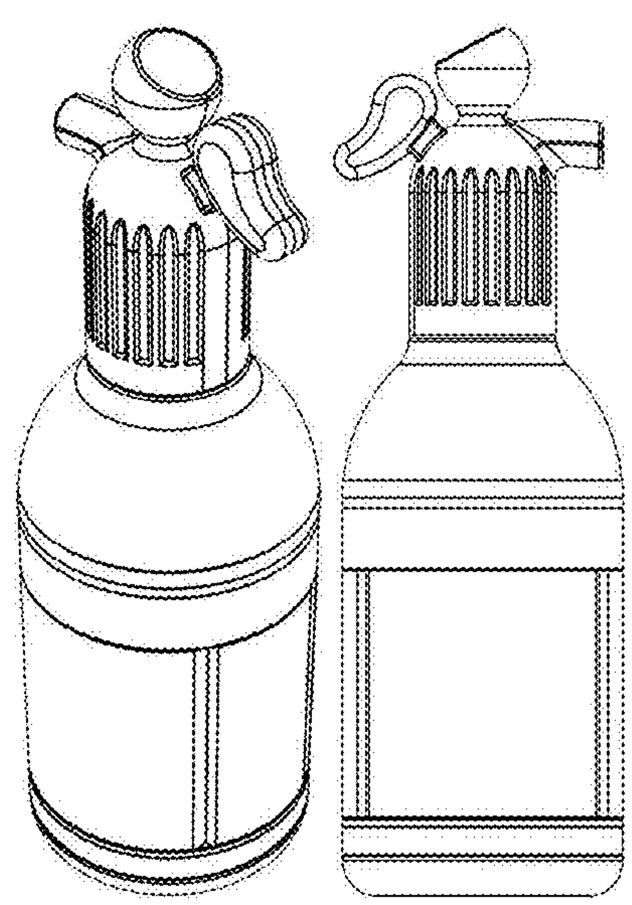

(56) **References Cited**

U.S. PATENT DOCUMENTS

D872,375	S *	1/2020	Fergusson	D29/126
D886,627	S *	6/2020	Ford	D9/679
D918,051	S *	5/2021	Sanghavi	D9/551
2016/0067534	A1*	3/2016	Rousseau	A62C 13/78 169/51
2016/0243385	A1*	8/2016	Rousseau	A62C 37/50
2020/0306573	A1*	10/2020	Mauney	A62C 13/68

OTHER PUBLICATIONS

The Paul Sung Bottle—Close up All 1, Dec. 12, 2018, Youtube.com,Jun. 2, 2021,URL: https://www.youtube.com/watch?v=VuQuYdl31sQ (Year: 2018).*

Framar Premium Hair Spray Bottle—Spray Bottle for Hair, Dec. 14, 2019,Amazon.com,Jun. 2, 2021.URL: https://www.amazon.com/Framar-Premium-Hair-Spray-Bottle/dp/B07XF4VQXB (Year: 2019).*

* cited by examiner

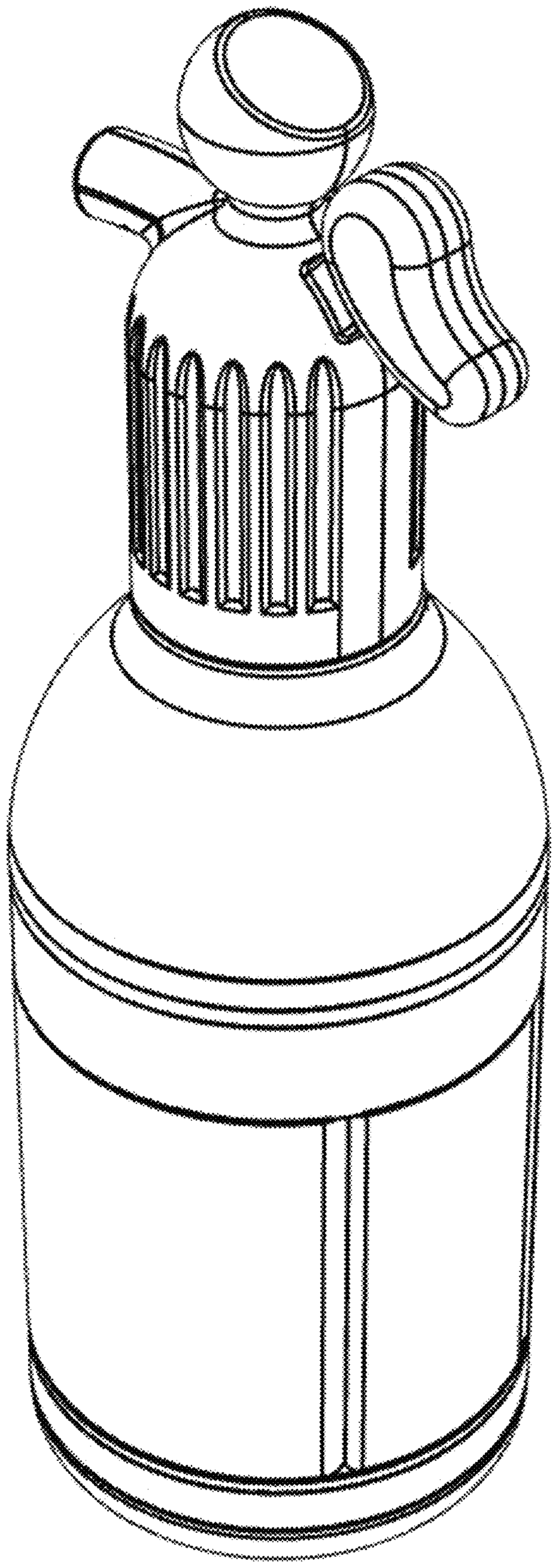

FIG. 1

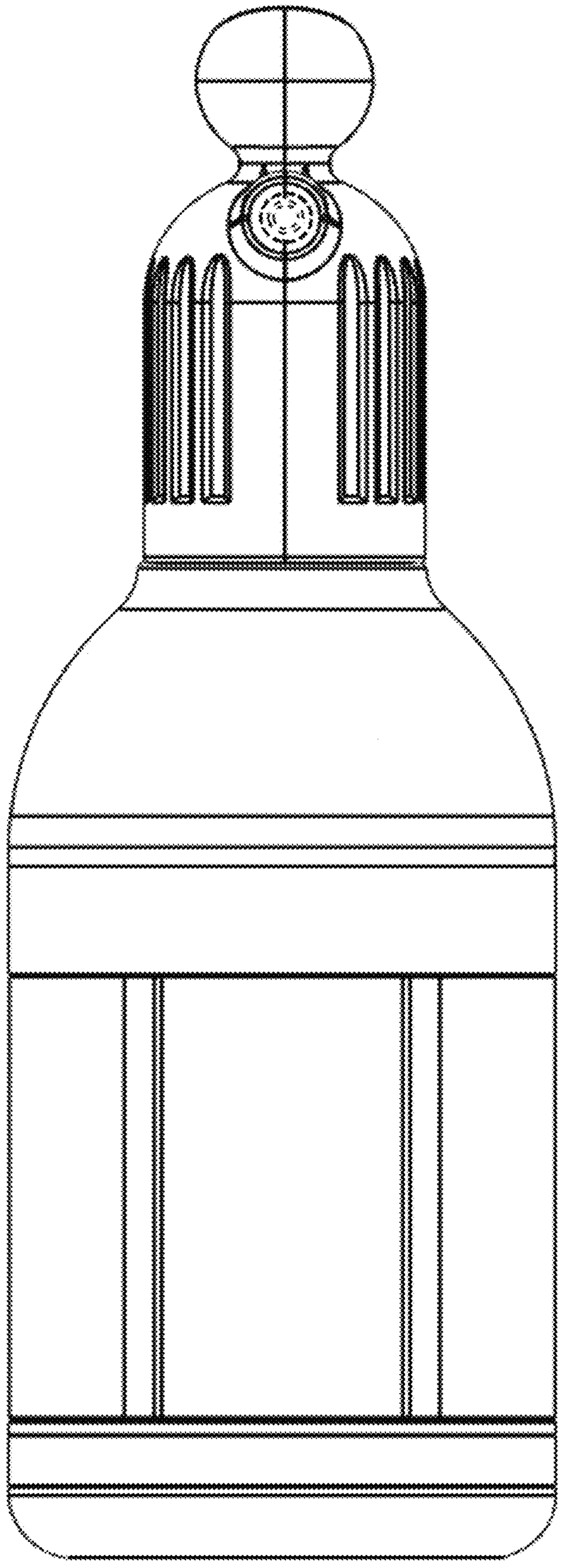

FIG. 2

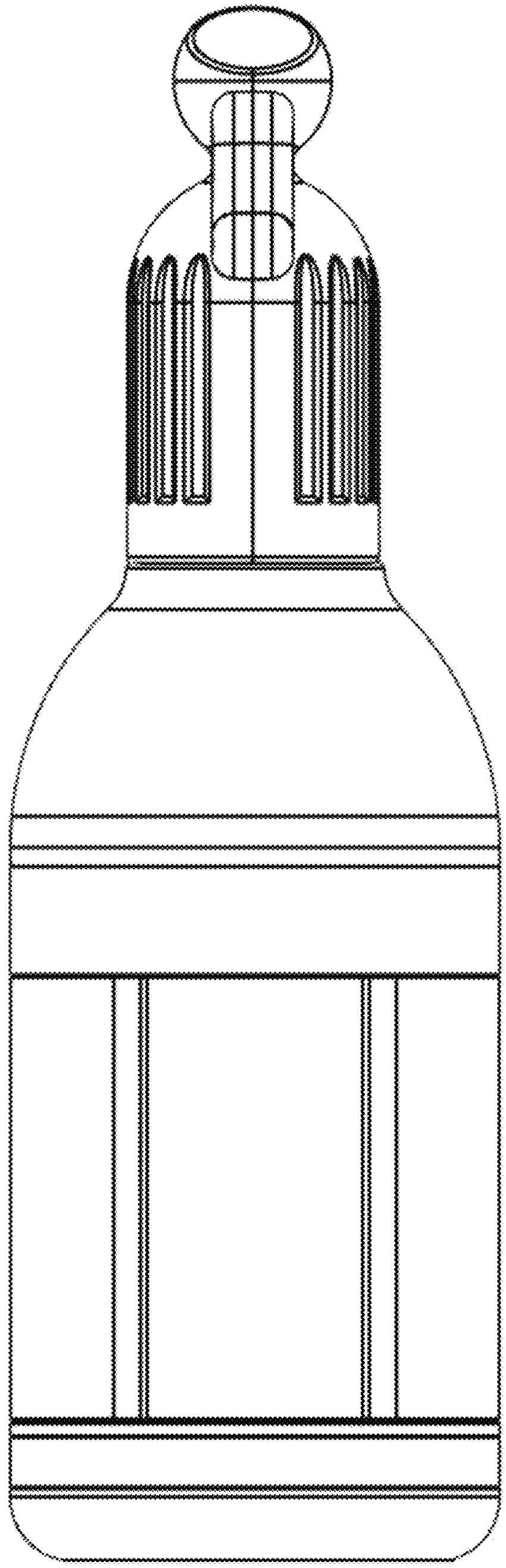

FIG. 3

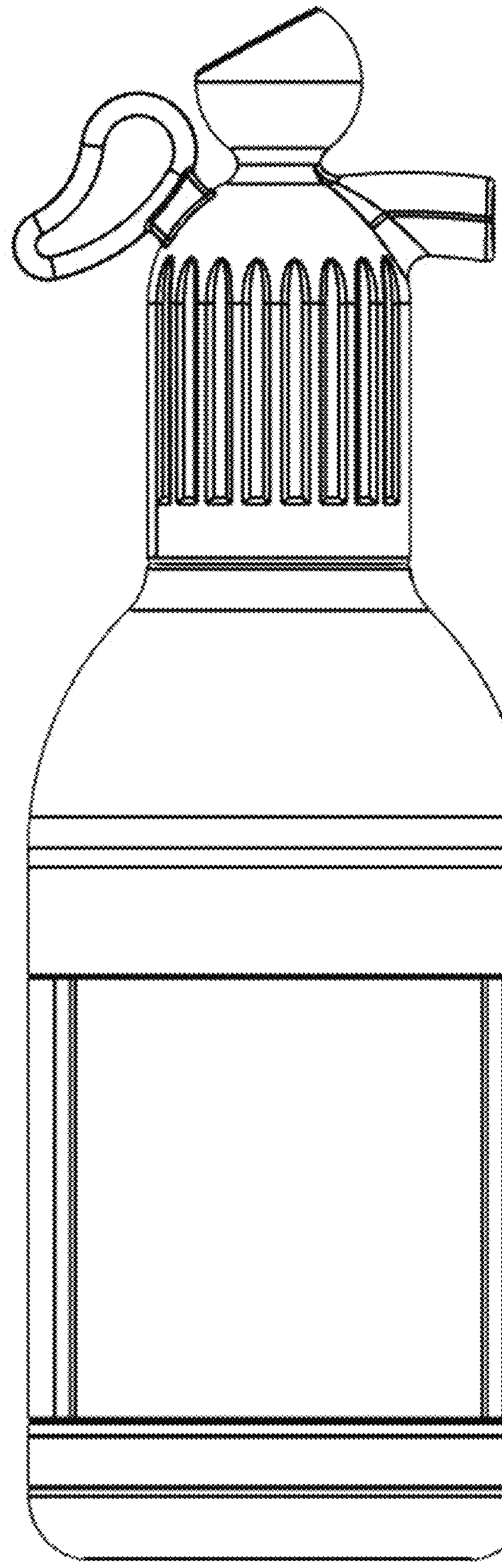

FIG. 4

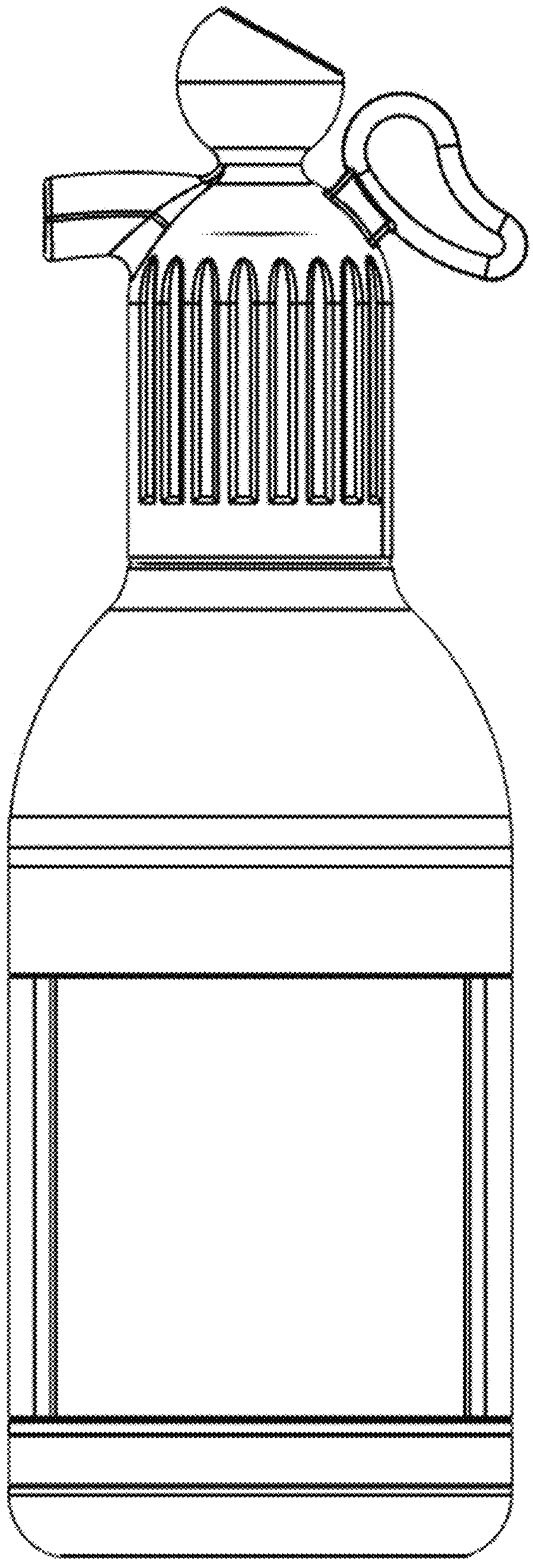

FIG. 5

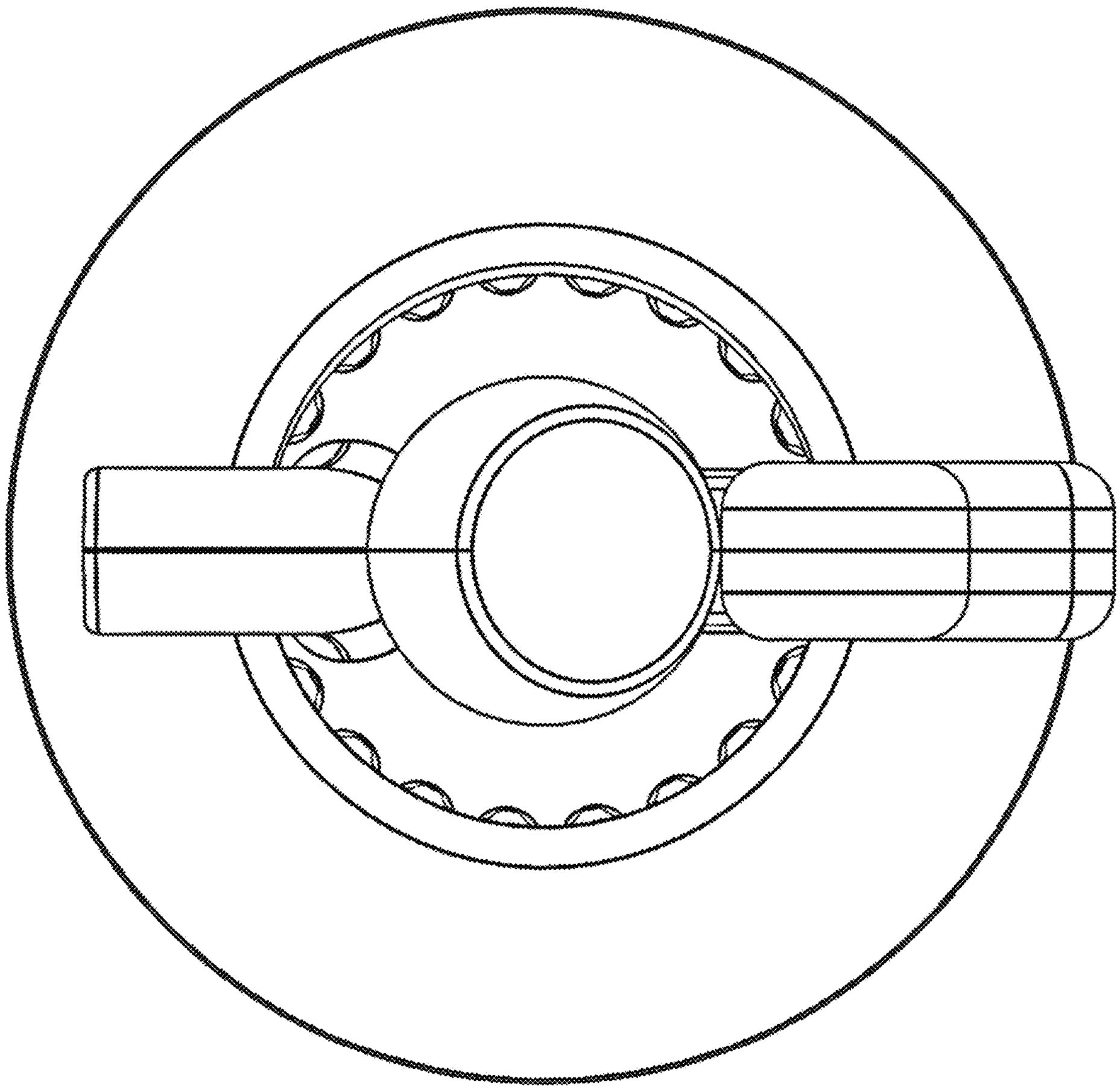

FIG. 6

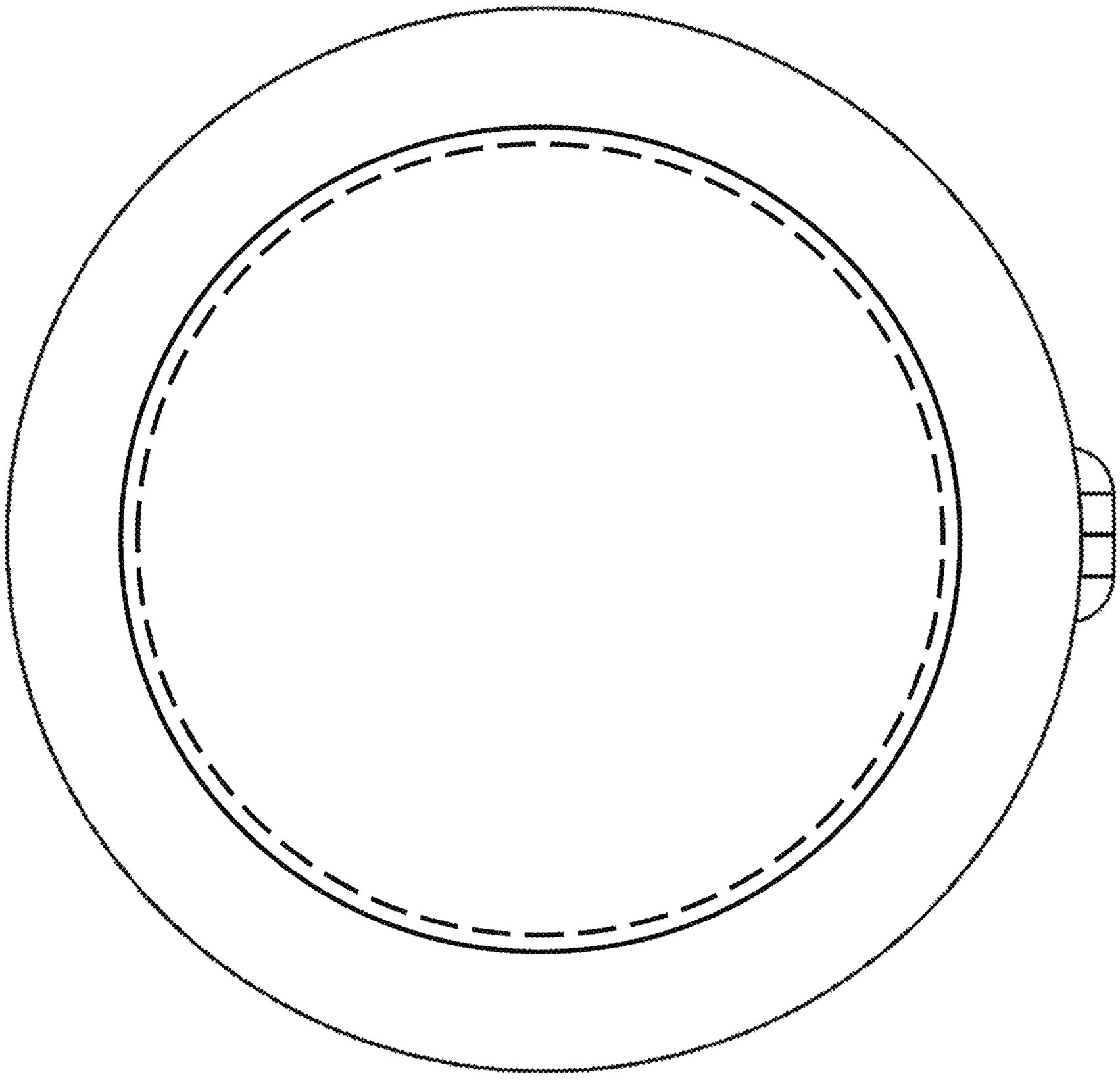

FIG. 7