US00D932583S

(12) United States Design Patent

Tang

(10) Patent No.: US D932,583 S
(45) Date of Patent: ** Oct. 5, 2021

(54) **MAGAZINE LOADER**

(71) Applicant: **Jingmin Tang**, Shenzhen (CN)

(72) Inventor: **Jingmin Tang**, Shenzhen (CN)

(**) Term: **15 Years**

(21) Appl. No.: **29/773,683**

(22) Filed: **Mar. 11, 2021**

(51) **LOC (13) Cl.** **22-03**

(52) **U.S. Cl.**
USPC **D22/108**

(58) **Field of Classification Search**
USPC D22/108
CPC F41A 9/82; F41A 9/83
See application file for complete search history.

(56) **References Cited**

U.S. PATENT DOCUMENTS

D700,266	S	*	2/2014	Tai	D22/108
D728,066	S	*	4/2015	Tai	D22/199
D753,781	S	*	4/2016	Cauley, Jr.	D22/108
D770,588	S	*	11/2016	Cauley, Jr.	D22/108
D790,030	S	*	6/2017	Ulbrich	D22/108
D799,632	S	*	10/2017	Ulbrich	D22/108
D815,235	S	*	4/2018	Grego	D22/108
D818,554	S		5/2018	Hefer et al.	
D836,178	S	*	12/2018	Hefer	D22/108
D861,822	S		10/2019	Hellyar	
10,900,730	B1	*	1/2021	Loveday, IV	F41A 9/83
D919,035	S	*	5/2021	Chen	D22/108
2004/0159035	A1	*	8/2004	Newman	F41A 9/83 42/87
2014/0317985	A1	*	10/2014	Cauley, Jr.	F41A 9/83 42/87
2015/0377573	A1	*	12/2015	Niccum	F41A 9/83 42/87

* cited by examiner

Primary Examiner — Charles D Hanson

(57) **CLAIM**

The ornamental design for a magazine loader, as shown and described.

DESCRIPTION

FIG. **1** is a perspective view of a magazine loader showing my new design;
FIG. **2** is another perspective view thereof;
FIG. **3** is another perspective view thereof;
FIG. **4** is a front elevational view thereof;
FIG. **5** is a rear elevational view thereof;
FIG. **6** is a left side elevational view thereof;
FIG. **7** is a right side elevational view thereof;
FIG. **8** is a top plan view thereof; and,
FIG. **9** is a bottom plan view thereof.
The broken lines in the drawings depict portions of the magazine loader that form no part of the claimed design.

1 Claim, 9 Drawing Sheets

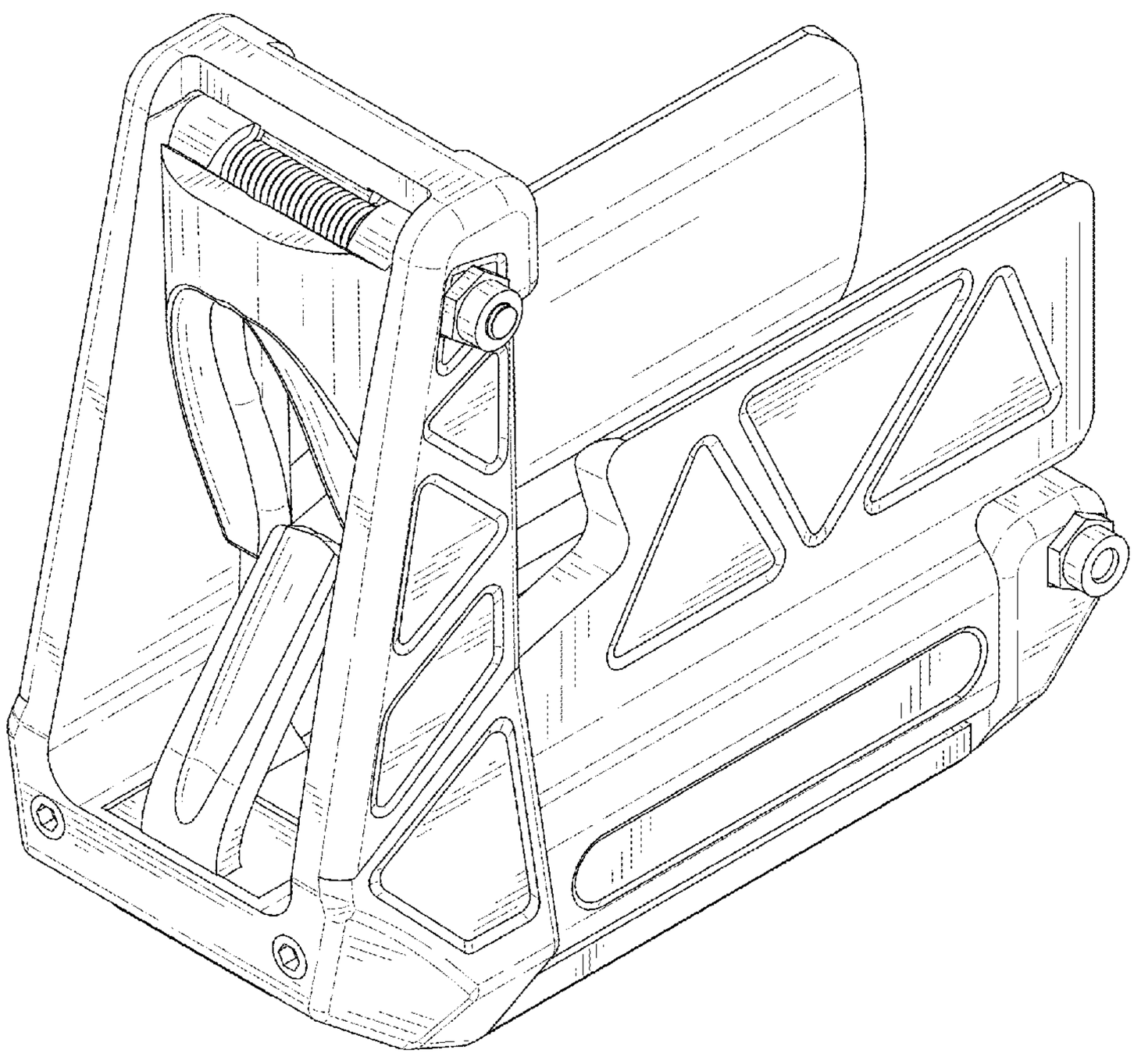

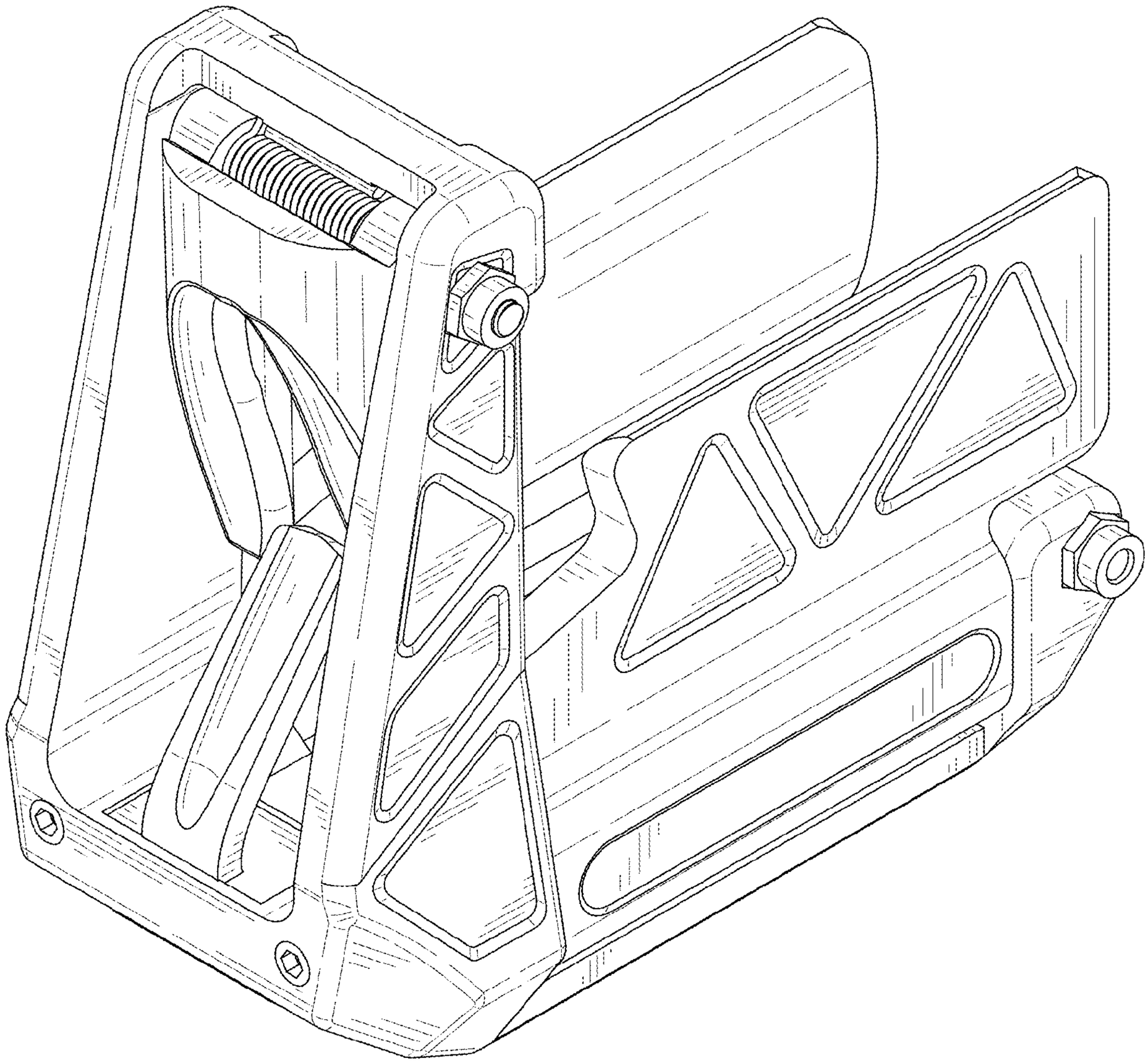

FIG. 1

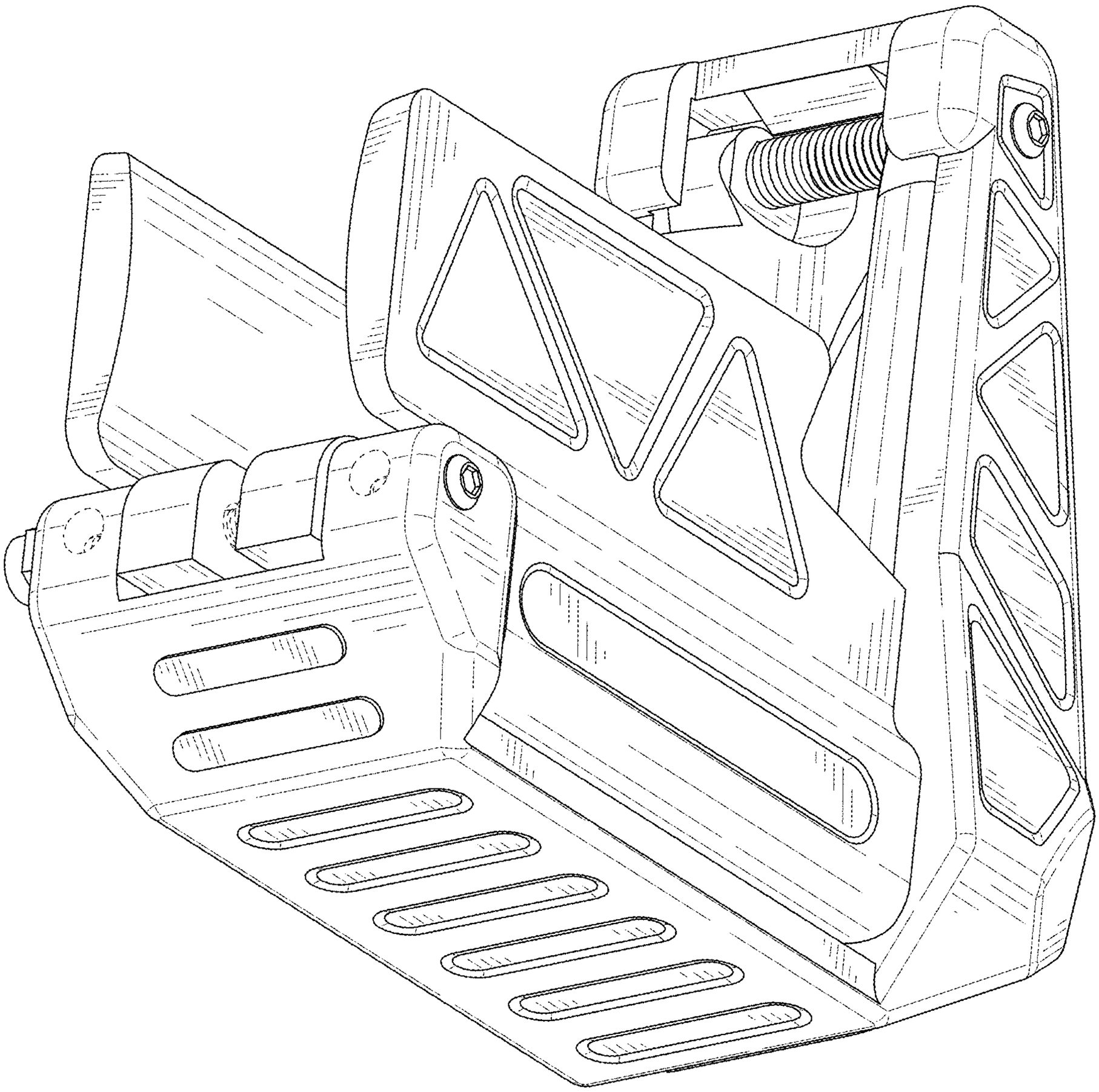

FIG. 2

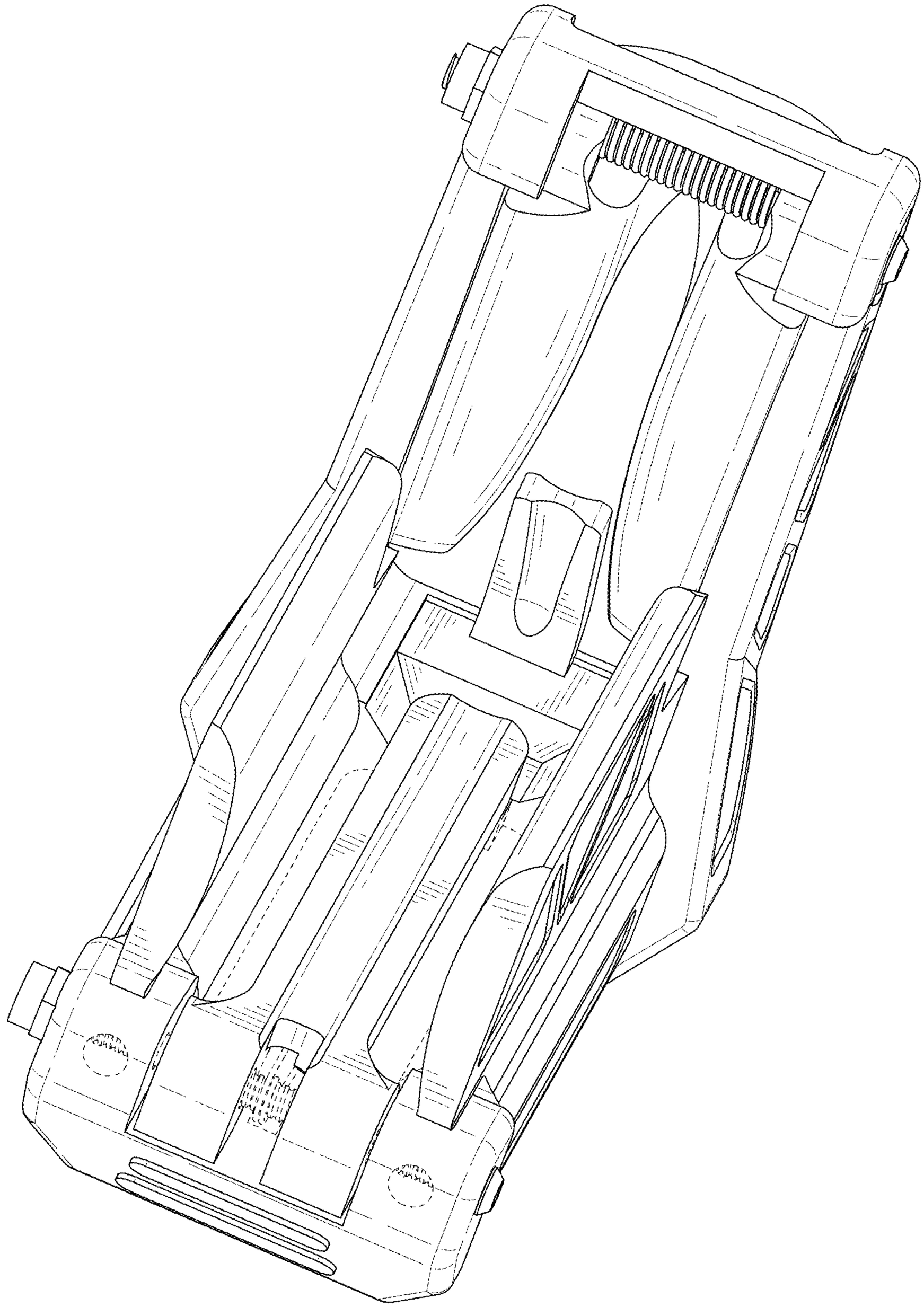

FIG. 3

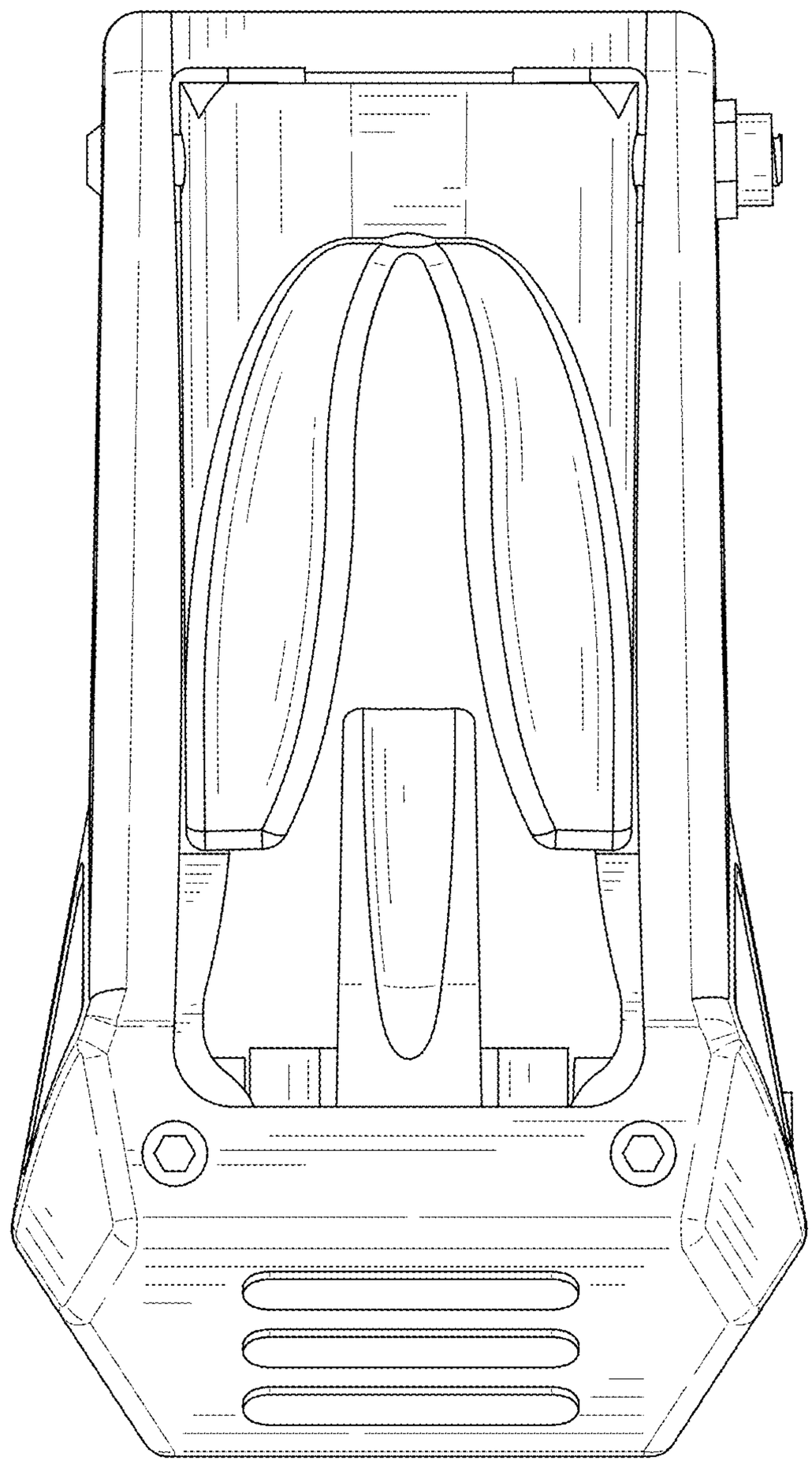

FIG. 4

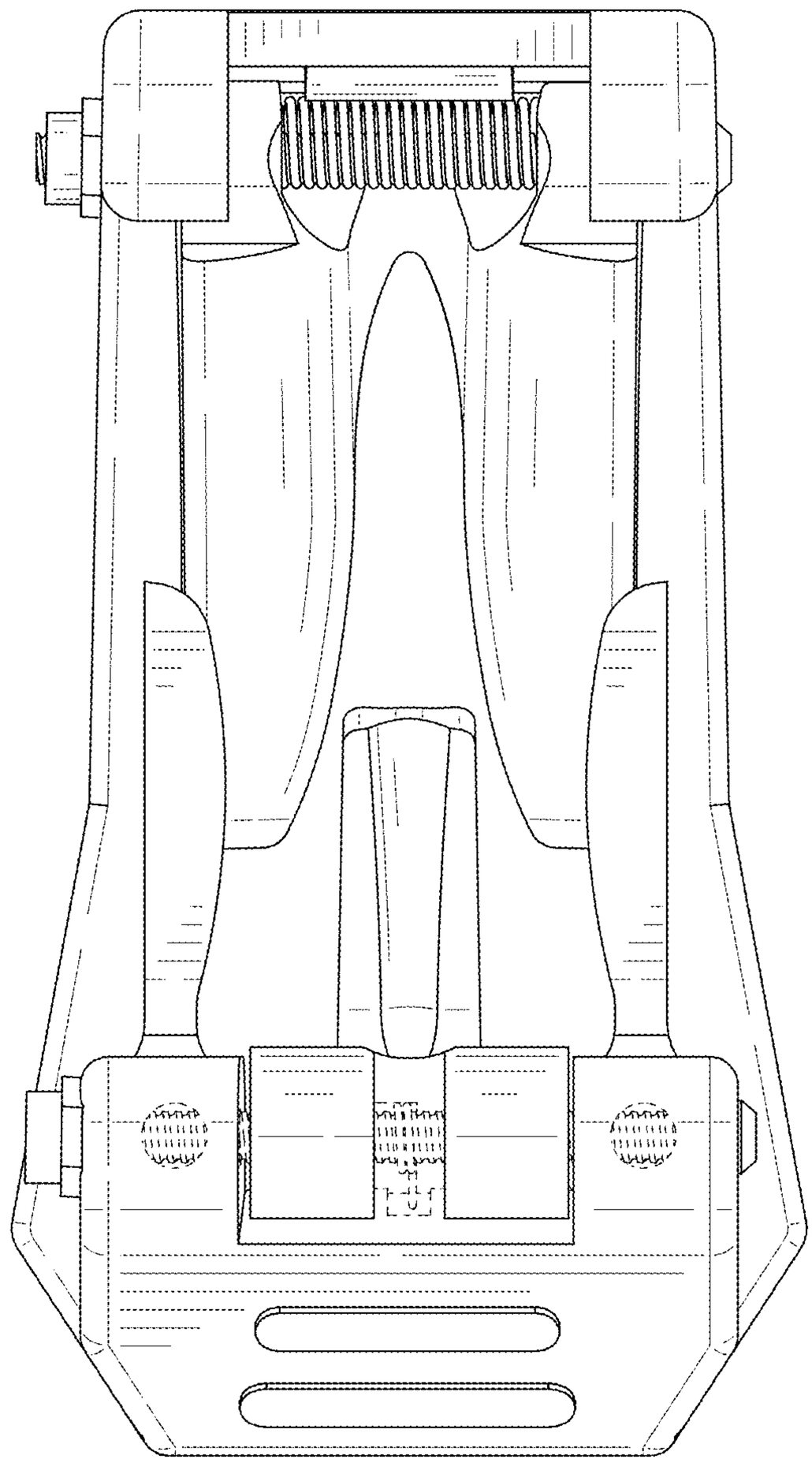

FIG. 5

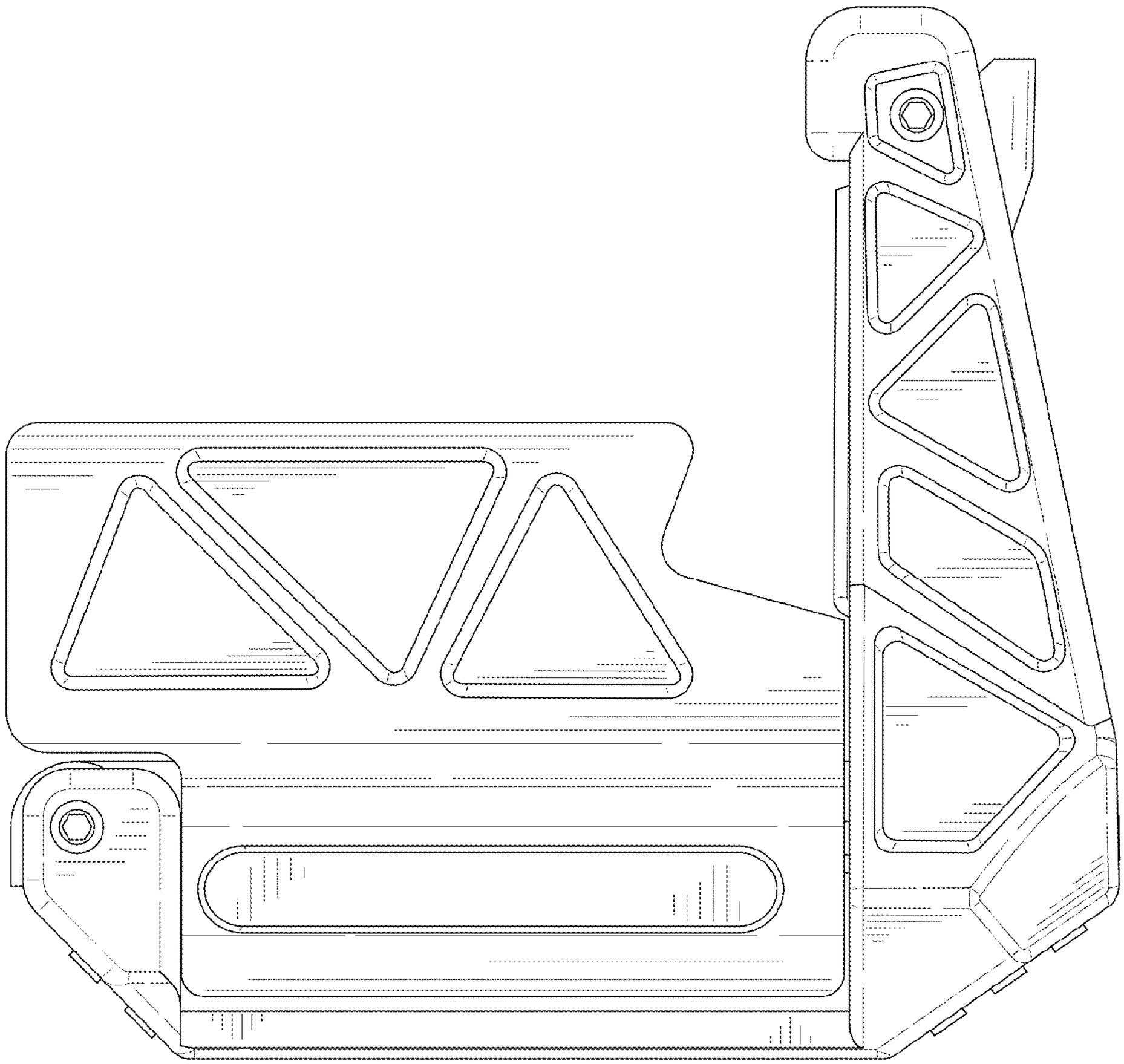

FIG. 6

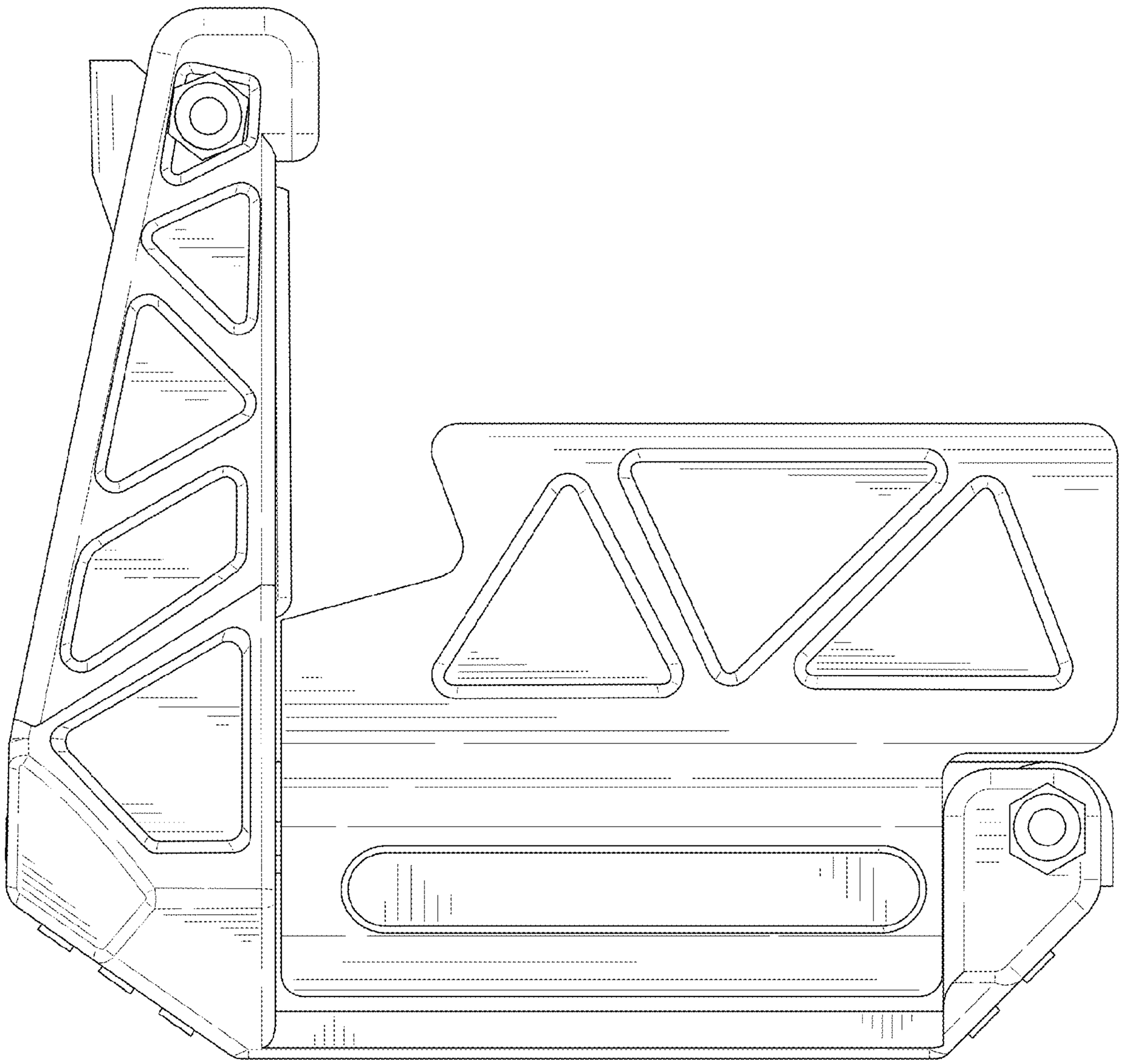

FIG. 7

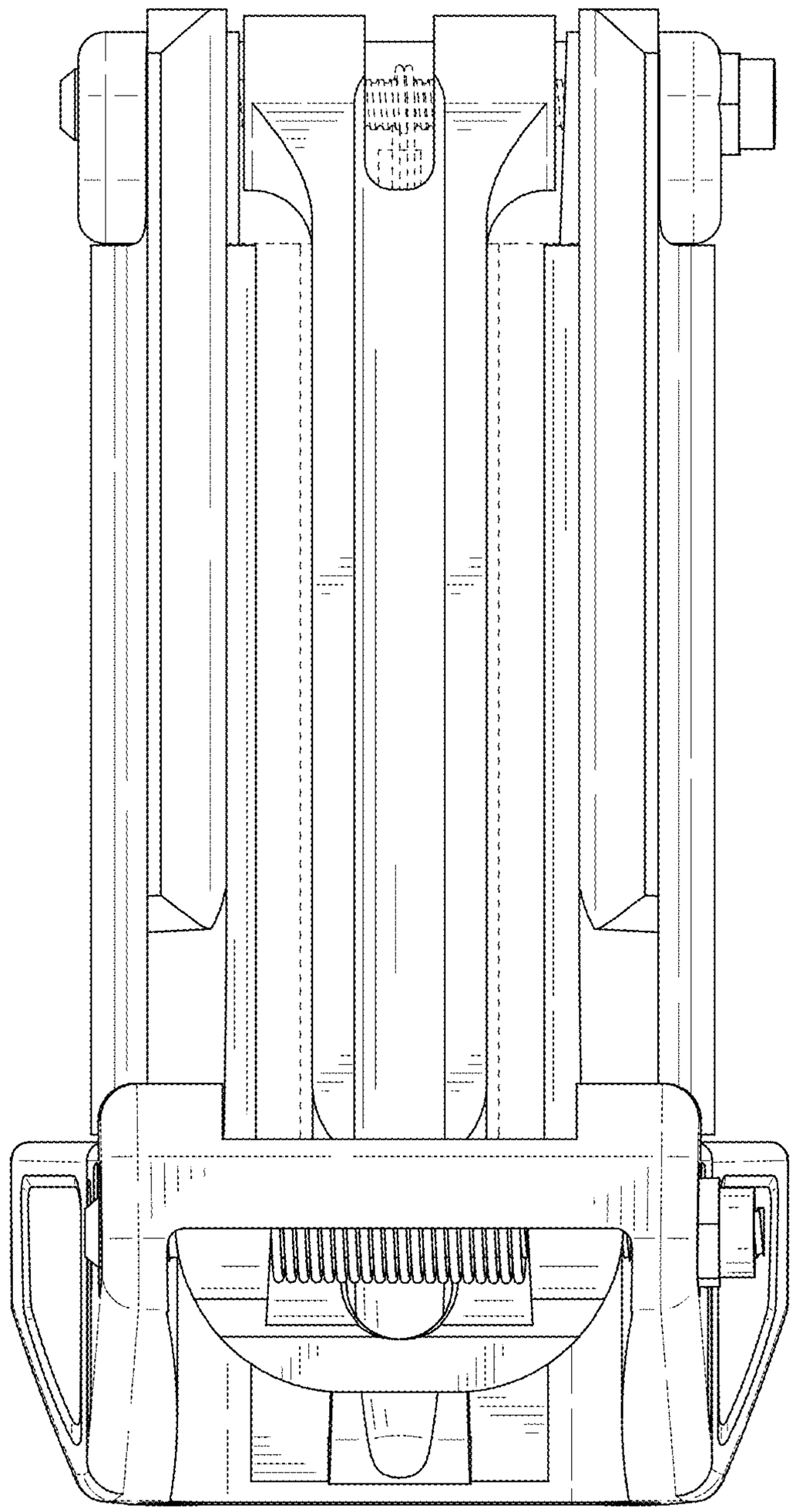

FIG. 8

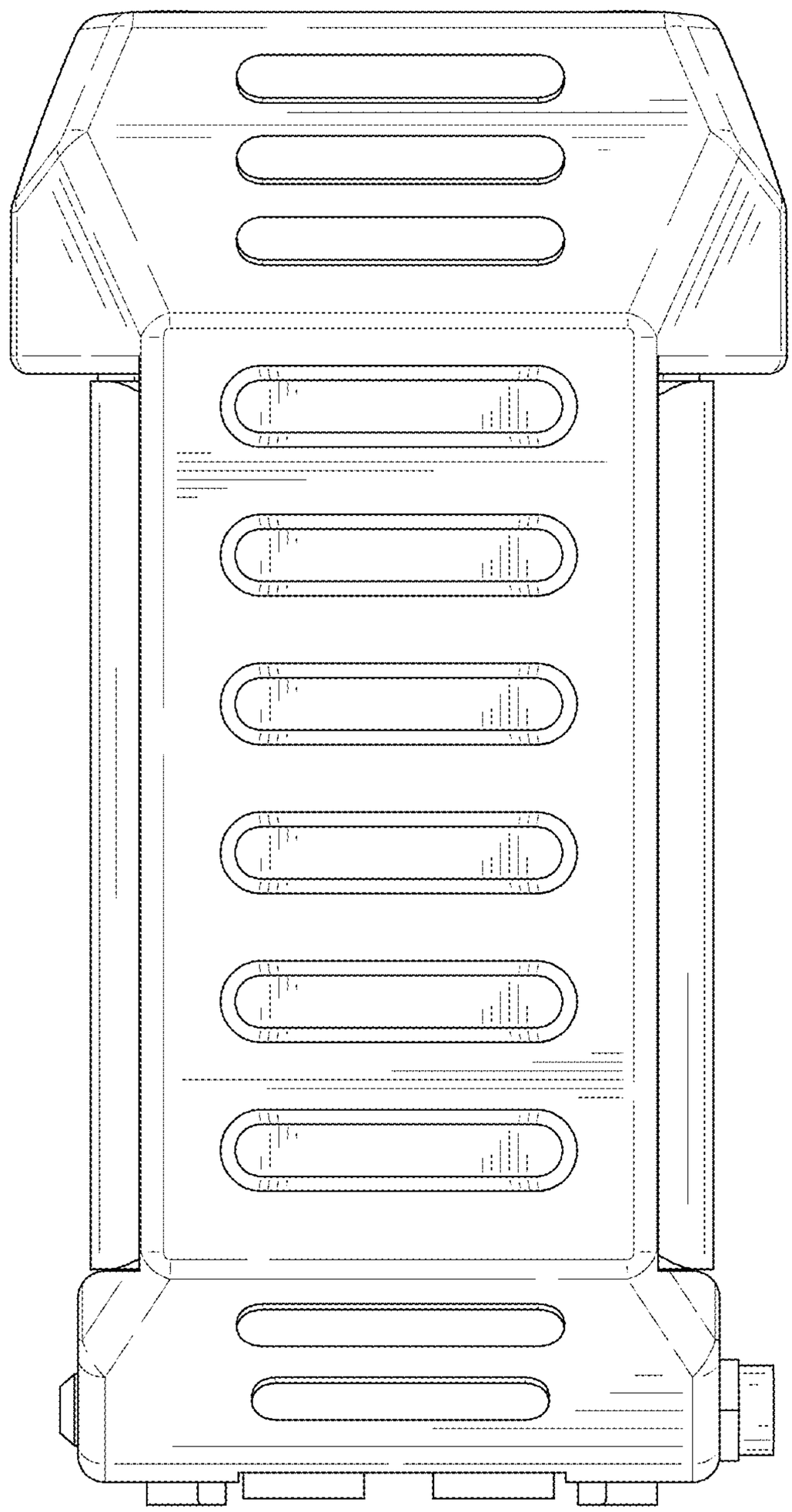

FIG. 9