US00D931839S

(12) United States Design Patent
Bryant

(10) Patent No.: US D931,839 S
(45) Date of Patent: ** Sep. 28, 2021

(54) **MICROPHONE**

(71) Applicant: **Samson Technologies Corp.**, Hauppauge, NY (US)

(72) Inventor: **Douglas Bryant**, Centerport, NY (US)

(73) Assignee: **SAMSON TECHNOLOGIES CORP.**, Hauppauge, NY (US)

(**) Term: **15 Years**

(21) Appl. No.: **29/716,686**

(22) Filed: **Dec. 11, 2019**

(51) **LOC (13) Cl.** **14-01**

(52) **U.S. Cl.**
USPC **D14/227**; D14/228

(58) **Field of Classification Search**
USPC D14/228, 225, 227, 229, 226; D16/244; D17/99; D6/681; 381/361, 311, 362, 381/363; 248/161, 170, 171, 544, 188.7, 248/187.1; 455/90.3, 575.1, 569.1
CPC H04R 19/04; H04R 19/00; H04R 1/08; H04R 1/04; H04R 17/02; H04R 25/00; H04R 1/02; H04R 5/02; H04R 9/08; F16M 11/38; A47B 91/00
See application file for complete search history.

(56) **References Cited**

U.S. PATENT DOCUMENTS

2,913,208 A * 11/1959 McKinley A47C 7/004 248/188.7
3,064,932 A * 11/1962 Holderman F16M 11/245 248/171
3,289,995 A * 12/1966 Taylor A47B 95/043 248/345.1
D246,706 S * 12/1977 McKee D12/403
4,061,302 A * 12/1977 Boone F16M 11/38 248/170
4,074,881 A * 2/1978 Bickford A47C 7/004 248/170
4,648,698 A * 3/1987 Iwasaki F16M 11/105 248/163.1
4,671,479 A * 6/1987 Johnson F16M 11/16 248/173
4,695,022 A * 9/1987 Mendonsa F16M 11/38 206/314
4,989,812 A * 2/1991 Lloyd F16M 11/242 248/170

(Continued)

FOREIGN PATENT DOCUMENTS

CN 306242213 * 12/2020
CN 306460429 * 4/2021
CN 306521466 * 5/2021

Primary Examiner — Paula Allen Greene
(74) *Attorney, Agent, or Firm* — Katten Muchin Rosenman LLP

(57) **CLAIM**

I claim the ornamental design for a microphone, as shown and described.

DESCRIPTION

FIG. **1** is a perspective view of a microphone showing my new design with the legs retracted,
FIG. **2** is a front view thereof,
FIG. **3** is a rear view thereof,
FIG. **4** is a left-side view thereof,
FIG. **5** is a right-side view thereof,
FIG. **6** is a top view thereof,
FIG. **7** is a bottom view thereof;
FIG. **8** is a perspective view thereof with the legs extended;
FIG. **9** is a front view thereof,
FIG. **10** is a rear view thereof,
FIG. **11** is a left-side view thereof,
FIG. **12** is a right-side view thereof,
FIG. **13** is a top view thereof; and,
FIG. **14** is a bottom view thereof.

1 Claim, 14 Drawing Sheets

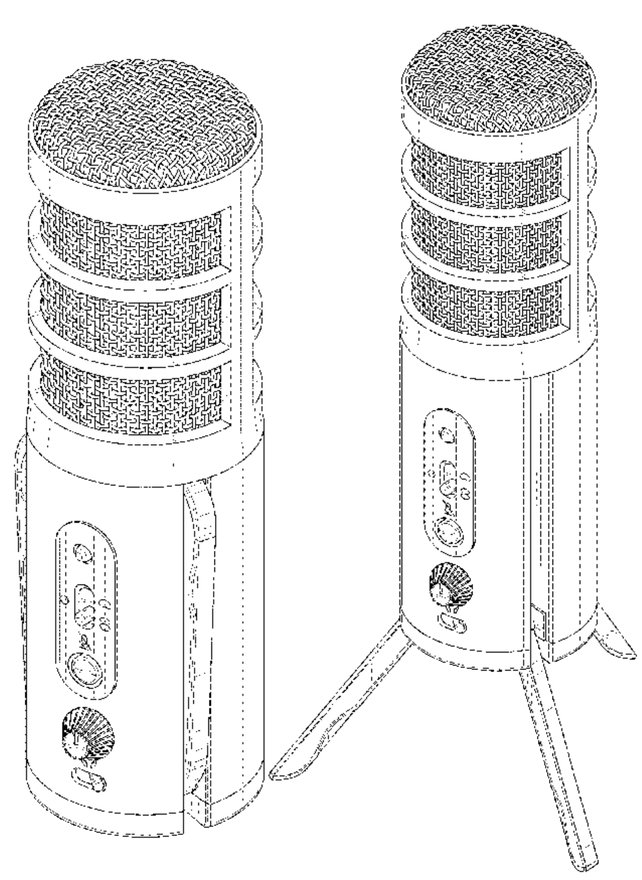

(56) **References Cited**

U.S. PATENT DOCUMENTS

5,639,056 A * 6/1997 Mecalf A47B 91/00 248/163.1
5,675,660 A * 10/1997 Townsend H04R 1/086 381/189
5,708,890 A * 1/1998 Nakano F16M 11/10 248/166
5,742,697 A * 4/1998 Ching-Chung H04R 1/083 381/355
D397,119 S * 8/1998 Okon D14/228
5,906,343 A * 5/1999 Battey A47C 7/004 248/188.7
6,007,032 A * 12/1999 Kuo F16M 11/10 248/125.1
6,061,457 A * 5/2000 Stockhamer H04R 1/00 367/140
6,219,429 B1 * 4/2001 Chung H04R 1/08 248/324
6,254,043 B1 * 7/2001 Schwarzler F16M 11/16 248/163.1
D462,947 S * 9/2002 Kung D14/228
D469,278 S * 1/2003 Lippert D17/13
6,597,796 B2 * 7/2003 Chang H04R 1/08 338/178
D504,678 S * 5/2005 Ruhrig D14/228
D533,578 S * 12/2006 Oka D16/244
D594,856 S * 6/2009 Marshall D14/228
D643,024 S * 8/2011 Goodman D14/227
8,322,665 B2 * 12/2012 Palik F41A 23/06 248/166
D687,421 S * 8/2013 Slaton D14/229
8,573,547 B2 * 11/2013 Hazzard A47C 7/004 248/188.7
D713,391 S * 9/2014 Ibuki D14/228
D746,797 S * 1/2016 Chen D14/228
9,877,113 B2 * 1/2018 Akino H04R 7/122
D834,004 S * 11/2018 Chen D14/226
D834,564 S * 11/2018 Chen D14/226
D835,612 S * 12/2018 Tong D14/225
D839,856 S * 2/2019 Chen D14/228
D842,278 S * 3/2019 Tong D14/227
D848,404 S * 5/2019 Chen D14/227
D849,721 S * 5/2019 Chen D14/227
D850,423 S * 6/2019 Chen D14/227
D851,073 S * 6/2019 Tong D14/227
D864,922 S * 10/2019 Mai D14/227
D890,141 S * 7/2020 Chen D14/228
D890,732 S * 7/2020 Chen D14/227
D895,583 S * 9/2020 Smith D14/227
D898,771 S * 10/2020 You D14/497
D917,430 S * 4/2021 Mai D14/225
D917,432 S * 4/2021 Mai D14/227
D919,604 S * 5/2021 Mai D14/227
2005/0161561 A1 * 7/2005 Hsieh F16M 11/242 248/171
2011/0271516 A1 * 11/2011 Slaton F16B 7/1463 29/525.03
2013/0044131 A1 * 2/2013 Milad H04R 3/00 345/633

* cited by examiner

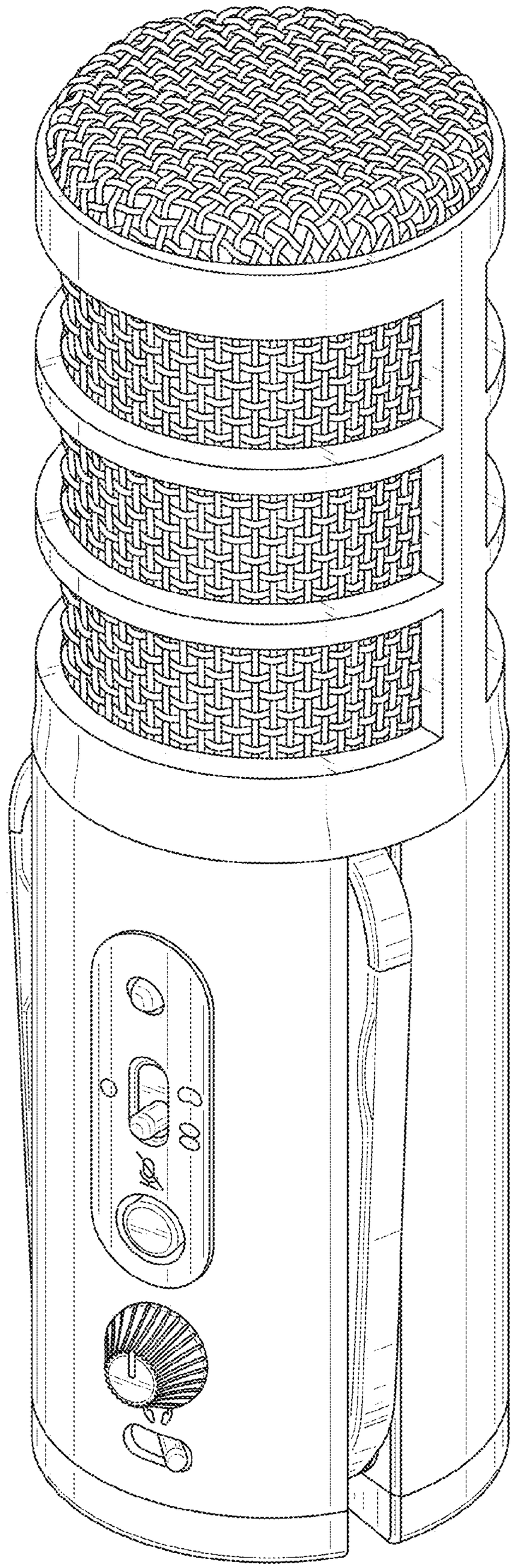

FIG. 1

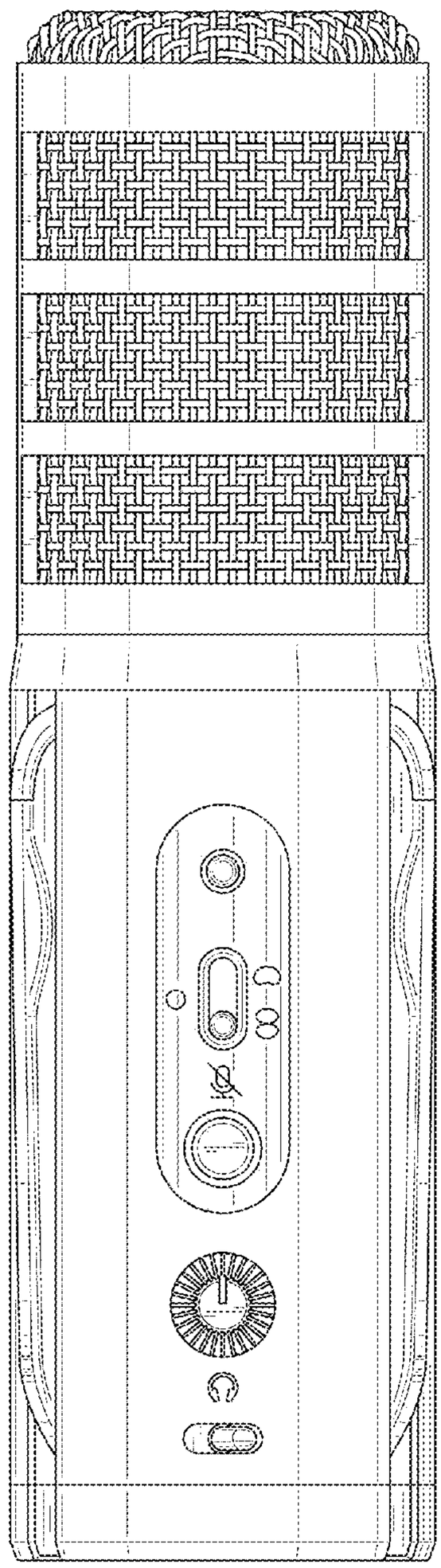

FIG. 2

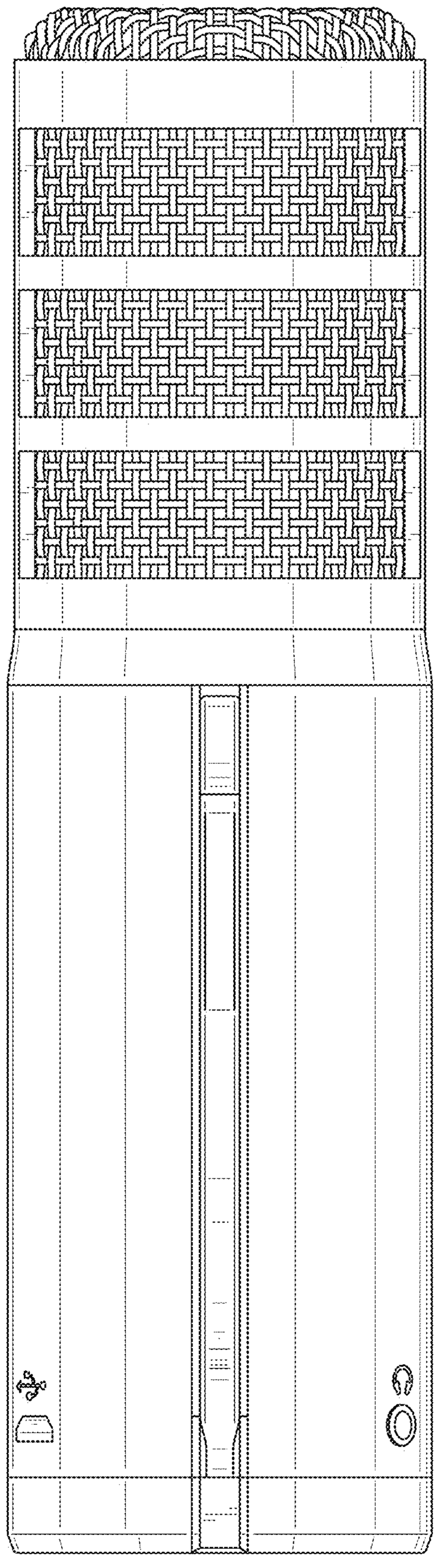

FIG. 3

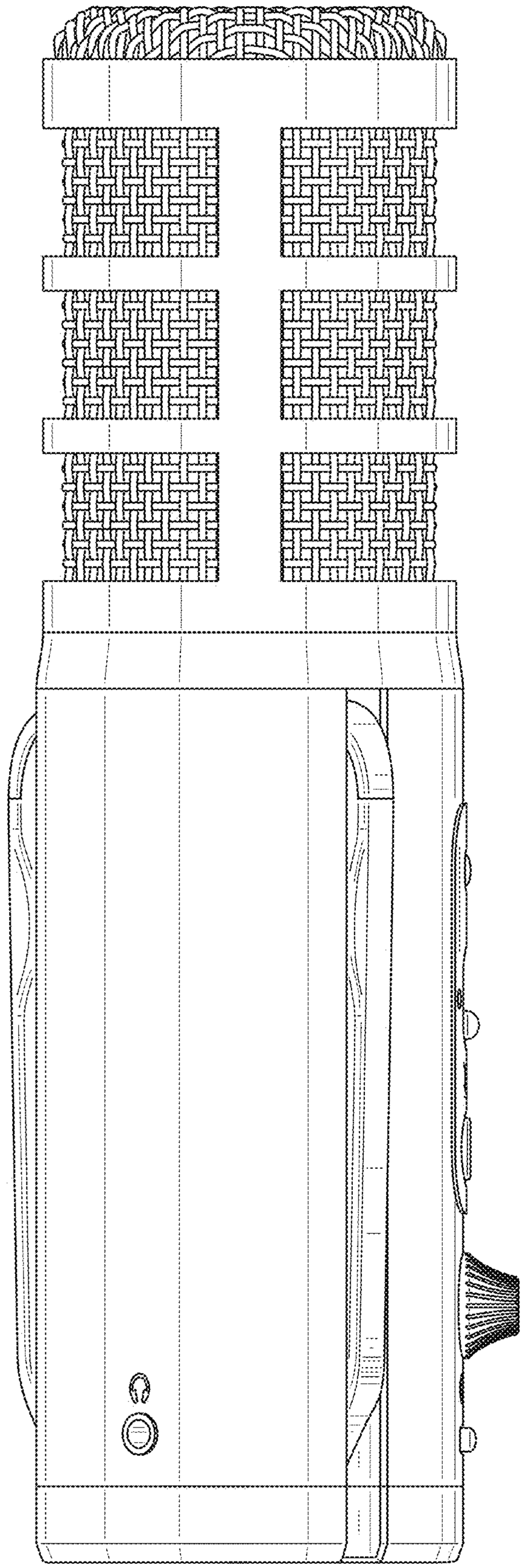

FIG. 4

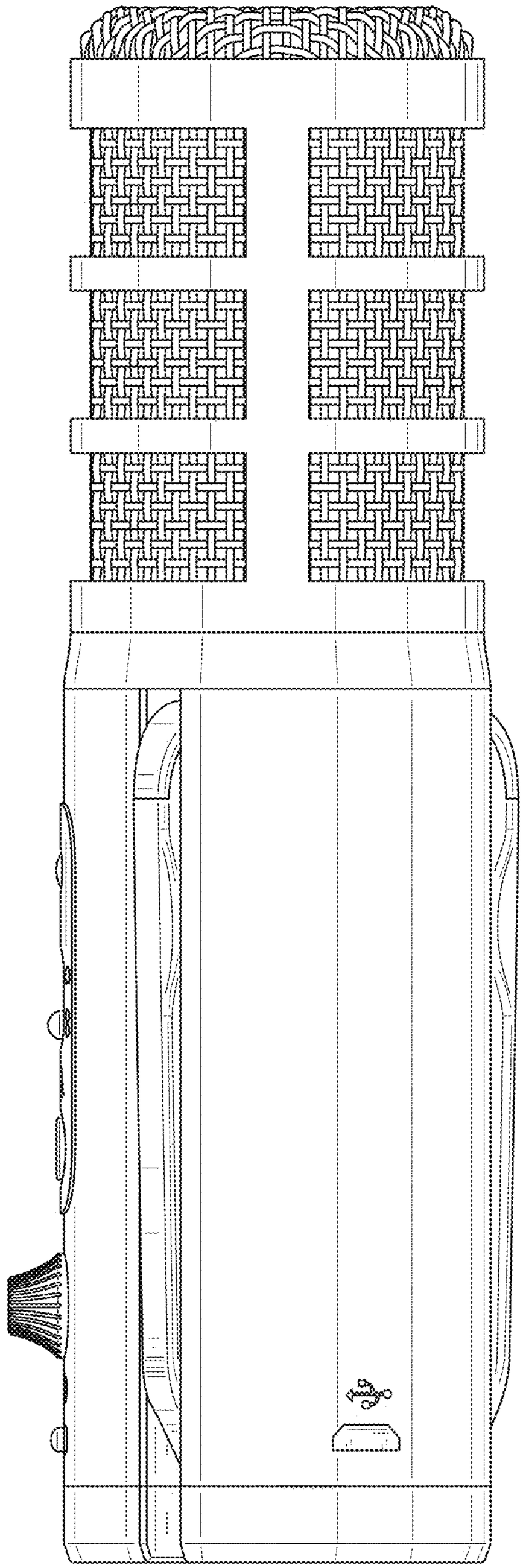

FIG. 5

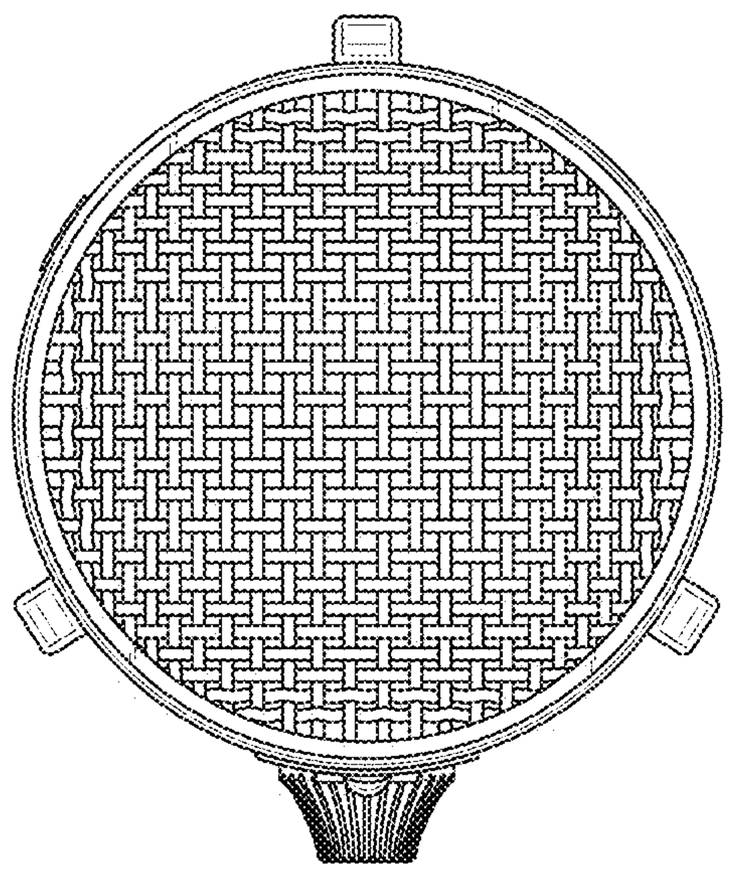

FIG. 6

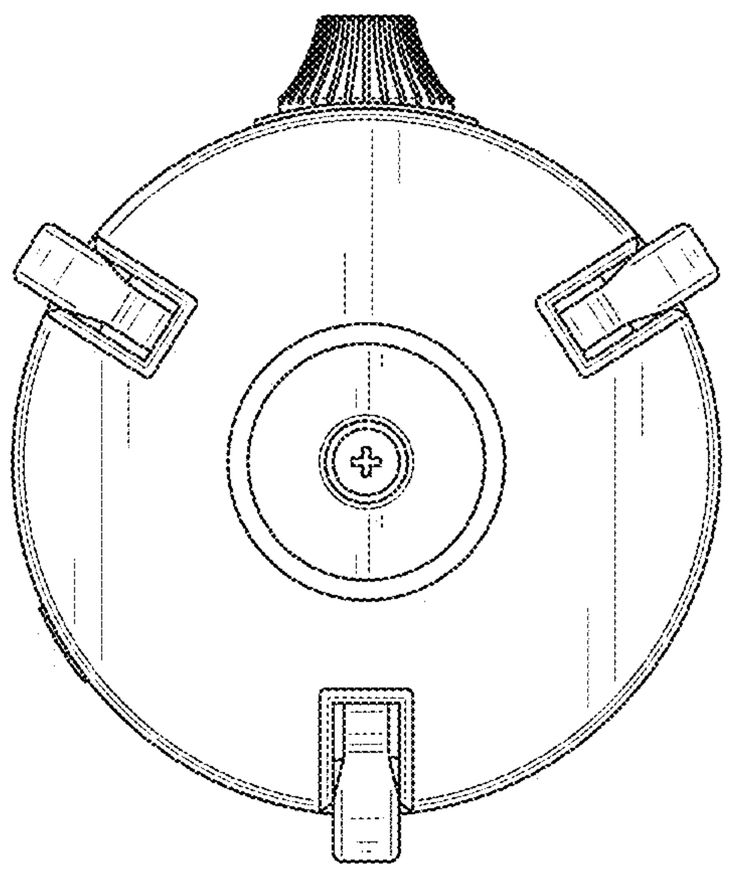

FIG. 7

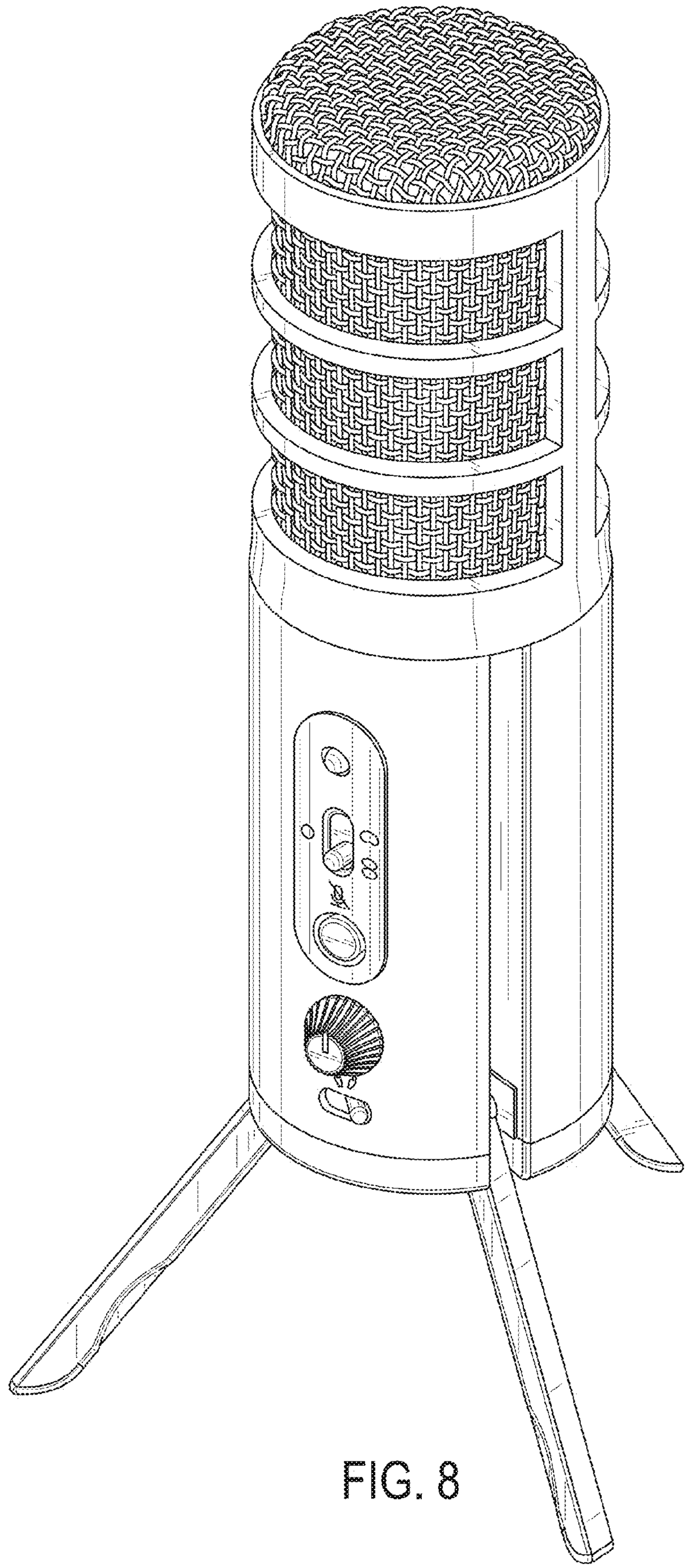

FIG. 8

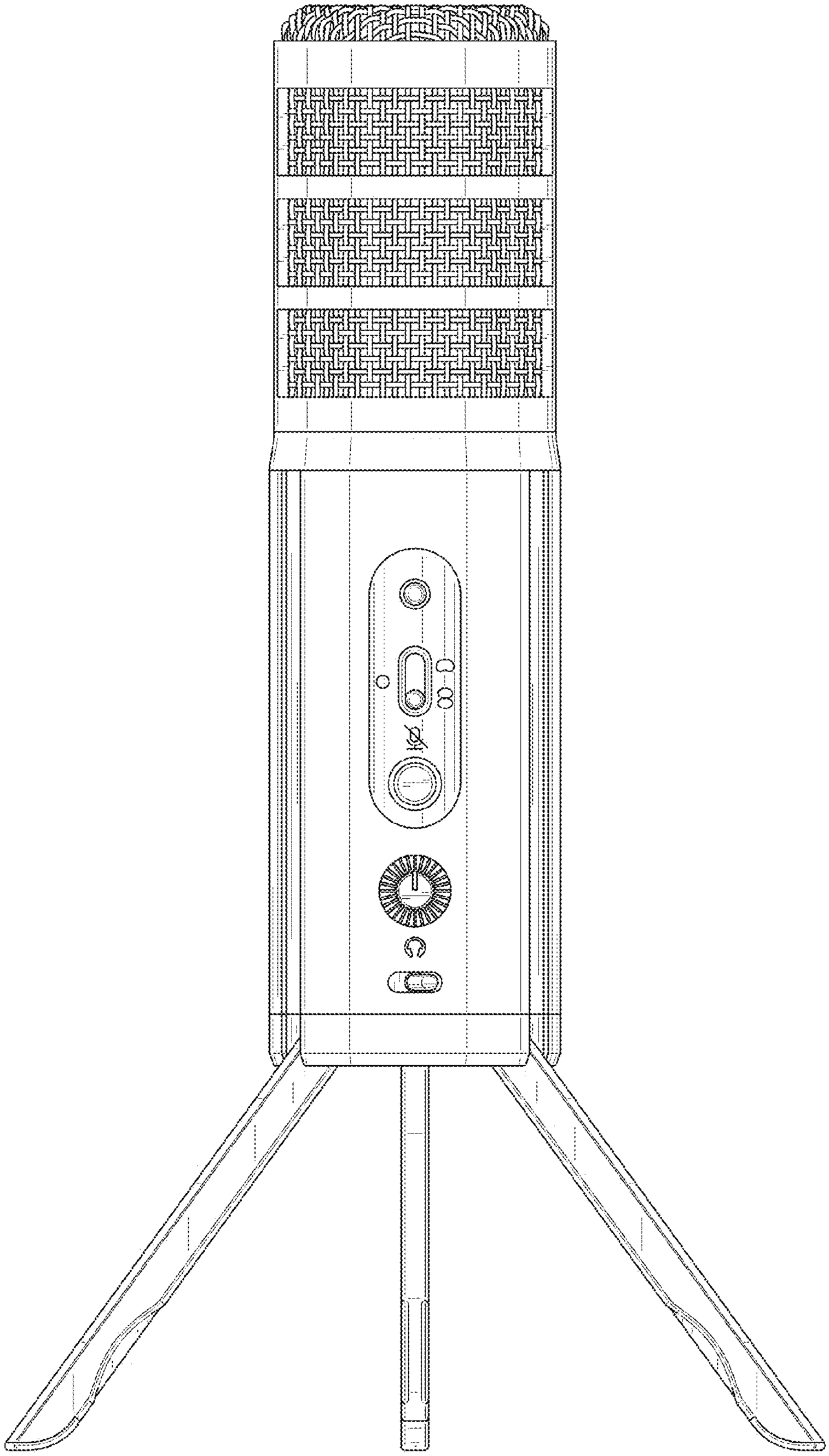

FIG. 9

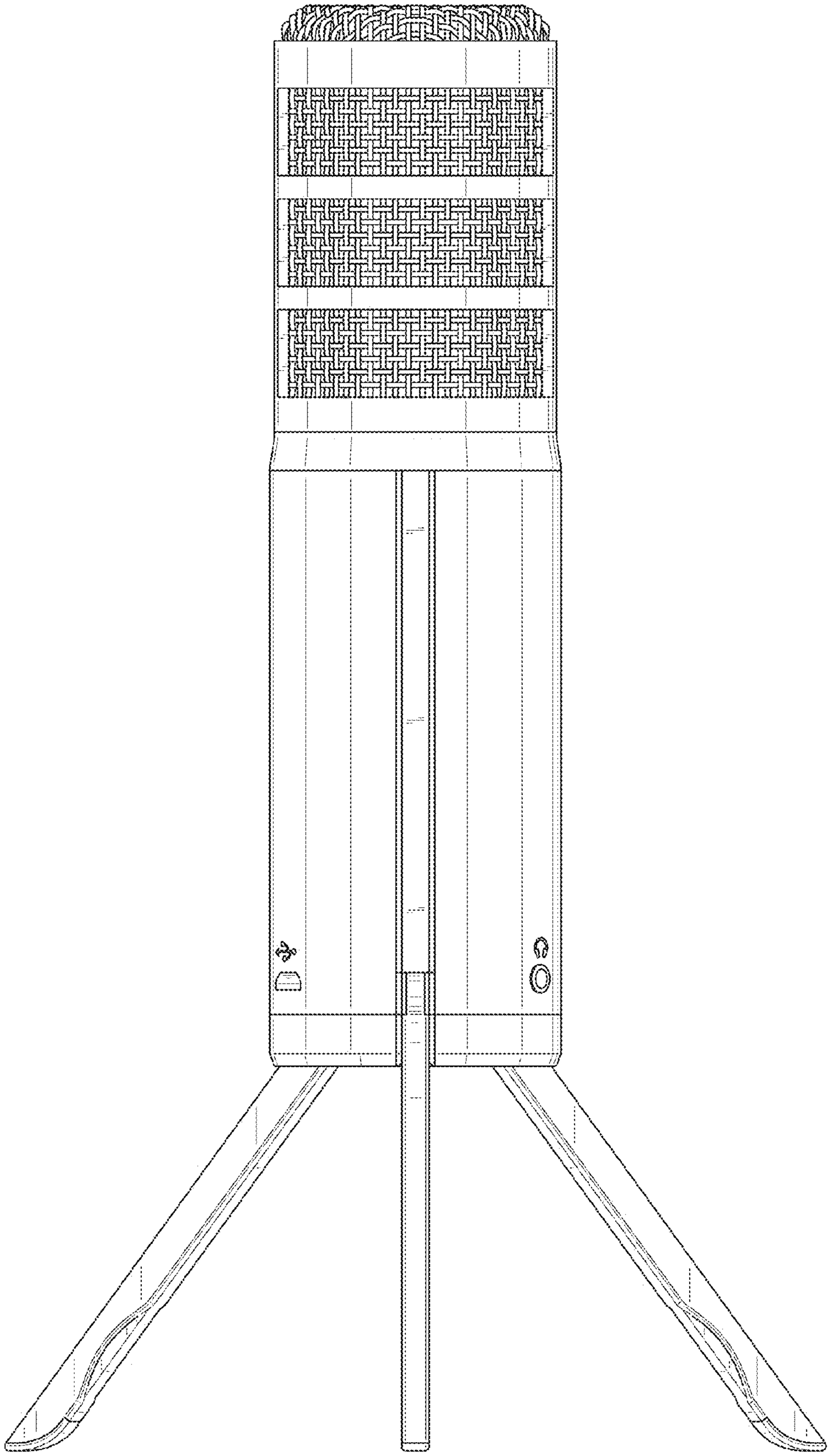

FIG. 10

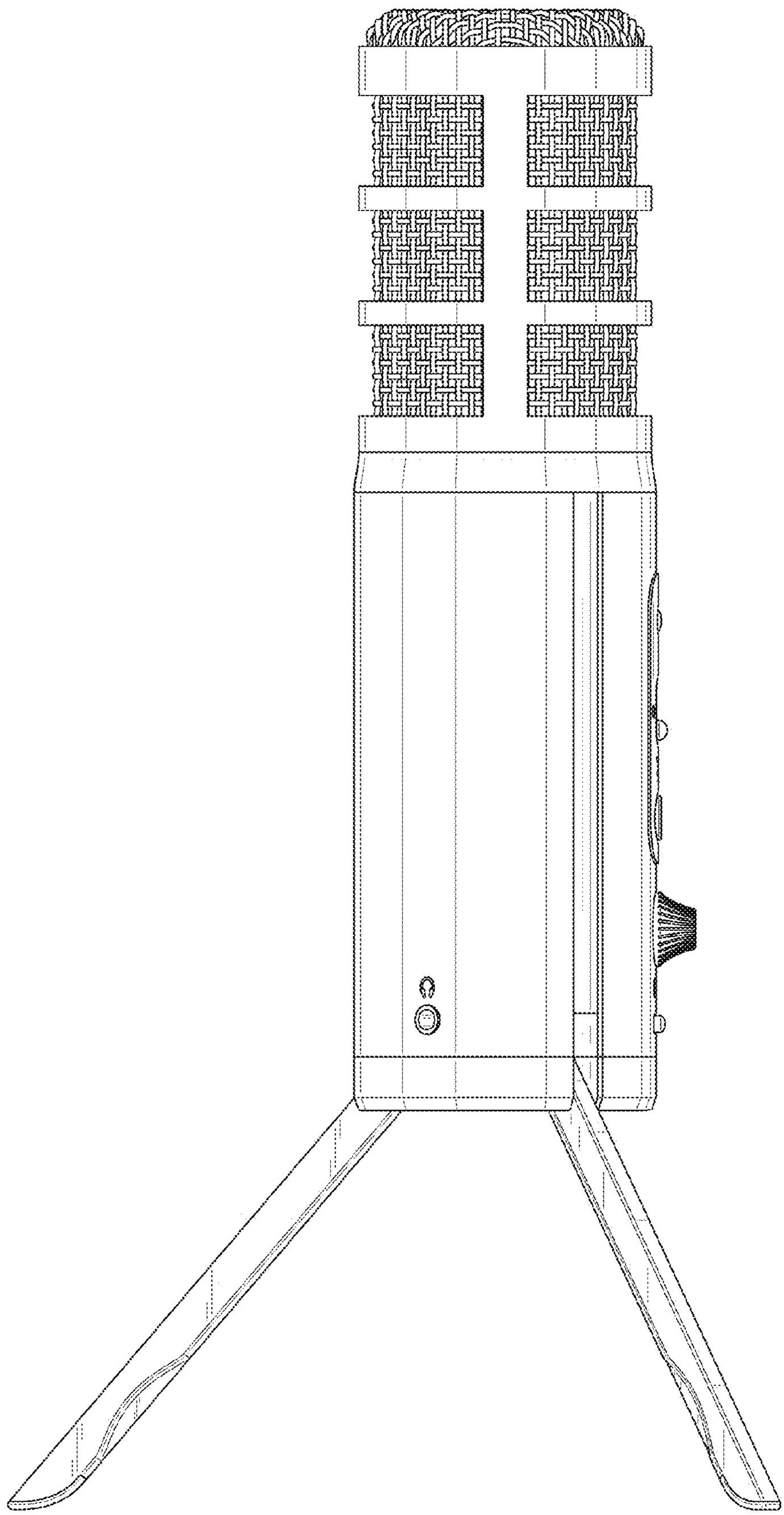

FIG. 11

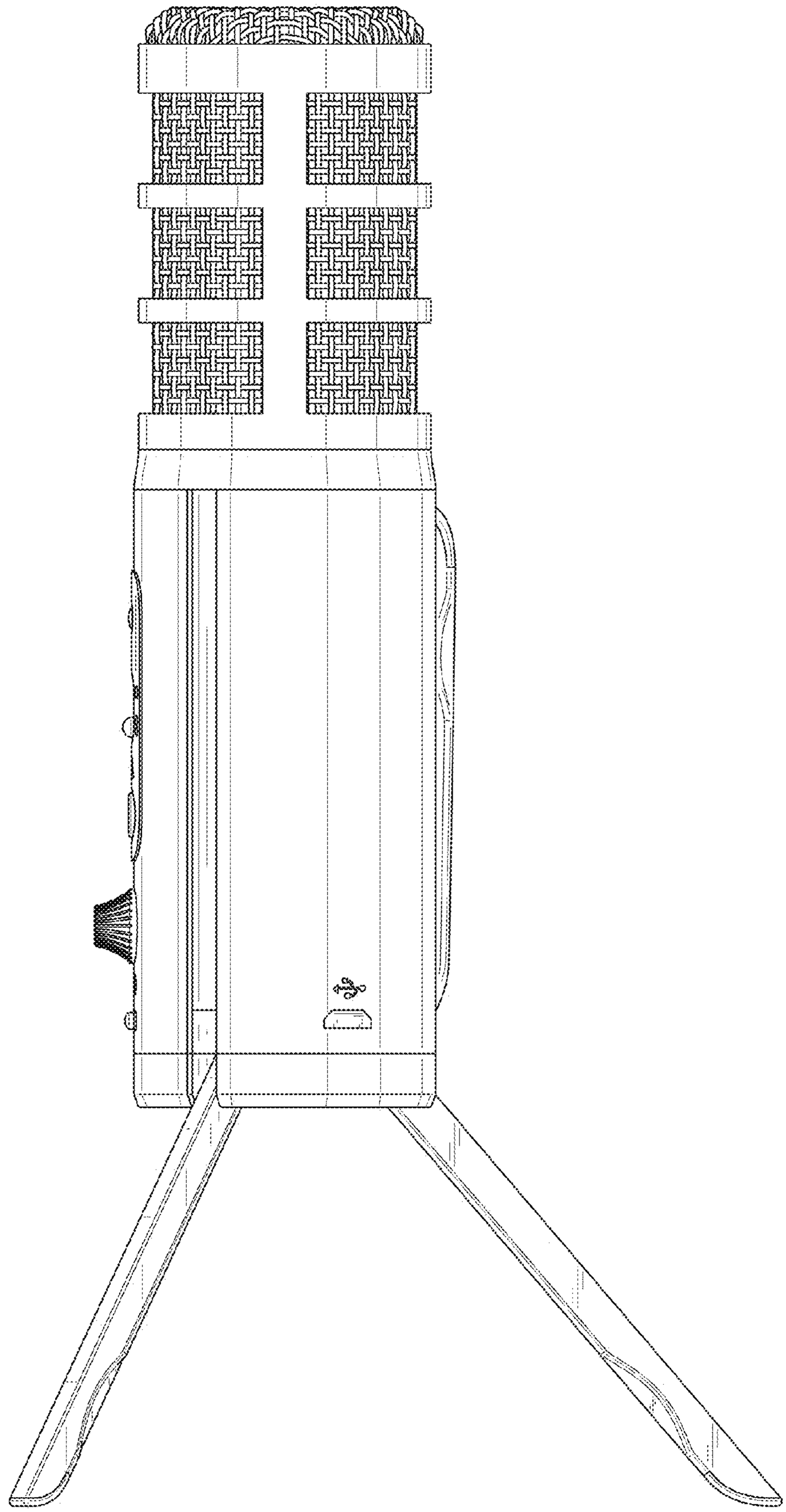

FIG. 12

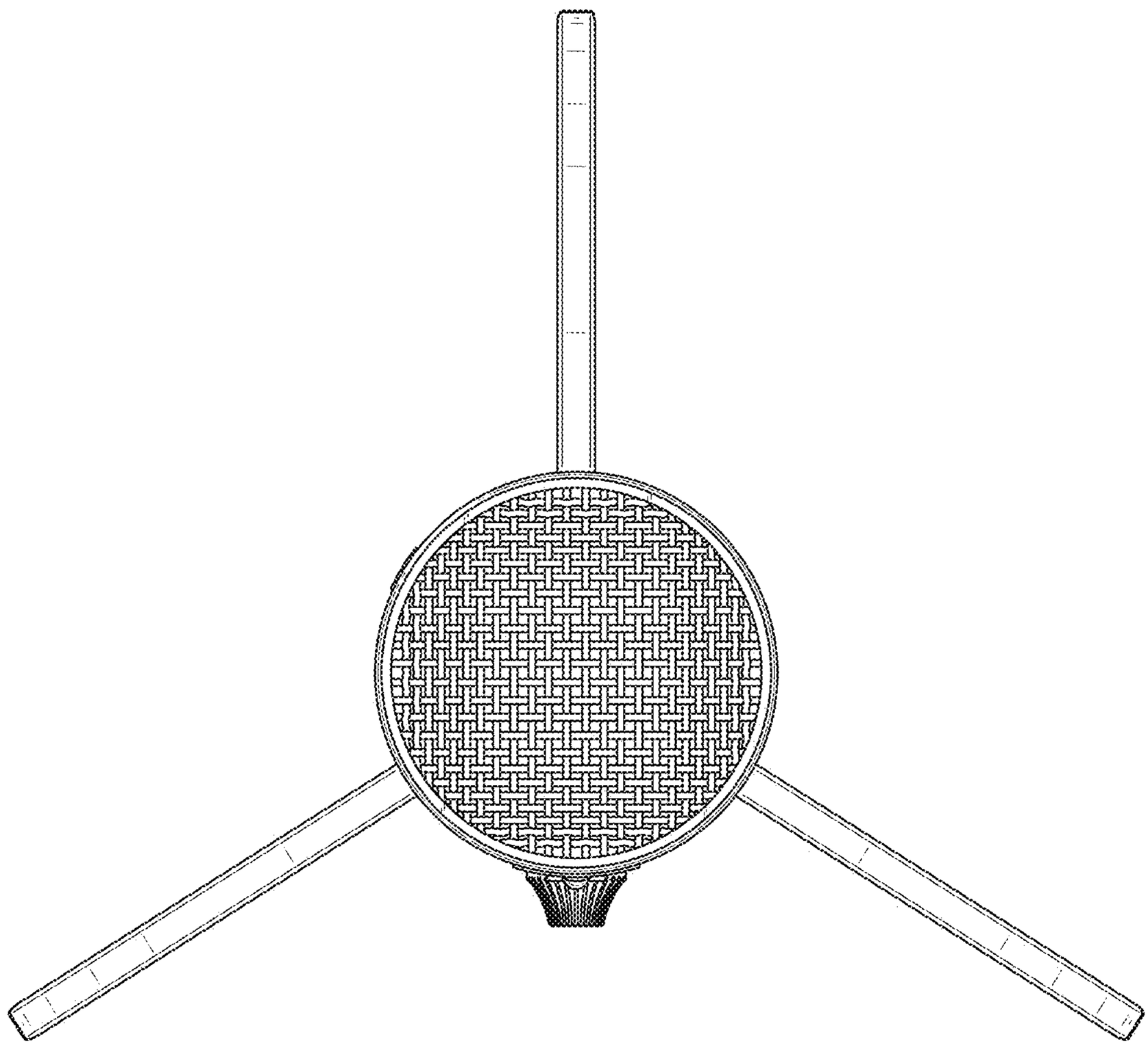

FIG. 13

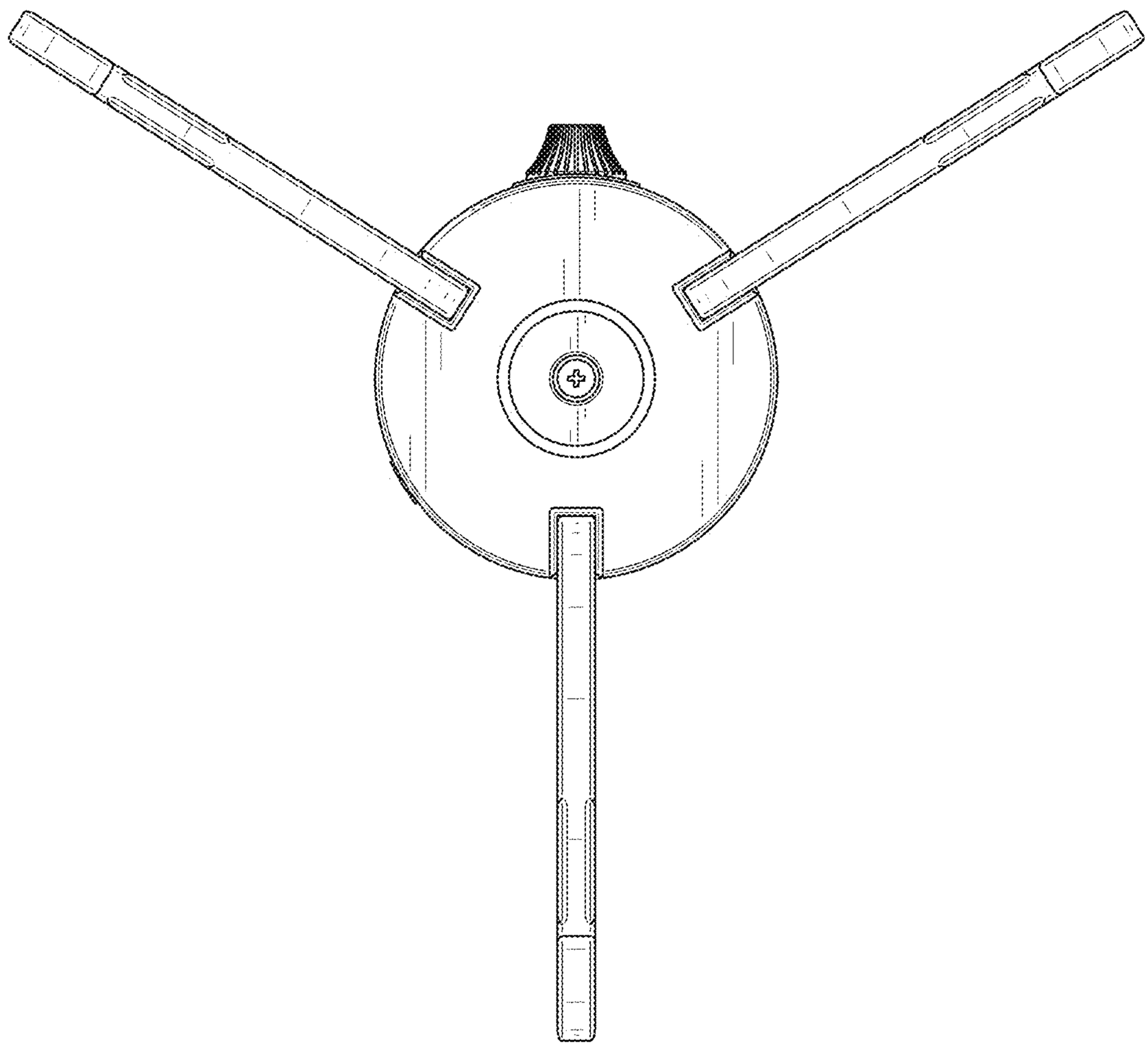

FIG. 14