US00D931789S

(12) United States Design Patent

Sakata

(10) Patent No.: US D931,789 S
(45) Date of Patent: ** Sep. 28, 2021

(54) **TIRE**

(71) Applicant: **Toyo Tire Corporation**, Itami (JP)

(72) Inventor: **Hirokazu Sakata**, Itami (JP)

(73) Assignee: **Toyo Tire Corporation**, Itami (JP)

(**) Term: **15 Years**

(21) Appl. No.: **29/707,969**

(22) Filed: **Oct. 2, 2019**

(30) **Foreign Application Priority Data**

Apr. 22, 2019 (JP) 2019-008971

(51) **LOC (13) Cl.** **12-15**

(52) **U.S. Cl.**
USPC **D12/585**

(58) **Field of Classification Search**
USPC D12/568–604, 900
CPC Y10T 152/10027; B60C 1/0016; B60C 11/0306; B60C 11/0302; B60C 3/06; B60C 9/17
See application file for complete search history.

(56) **References Cited**

U.S. PATENT DOCUMENTS

D405,740	S	*	2/1999	Heinen	D12/585
D470,101	S	*	2/2003	Heinen	D12/584
D606,930	S	*	12/2009	Taylor	D12/585
D624,487	S	*	9/2010	Drake	D12/585
D764,392	S	*	8/2016	Fu	D12/585
D777,093	S	*	1/2017	Tsukamoto	D12/585
D833,965	S	*	11/2018	Shimomura	D12/585
D894,108	S	*	8/2020	Takahashi	D12/585
2012/0318420	A1	*	12/2012	Sawai	B60C 11/042 152/209.15

FOREIGN PATENT DOCUMENTS

JP	920568	S	2/1995
JP	1579053	S	6/2017

* cited by examiner

Primary Examiner — John A Voytek
(74) *Attorney, Agent, or Firm* — Sterne, Kessler, Goldstein & Fox P.L.L.C.

(57) **CLAIM**

The ornamental design for a tire, as shown and described.

DESCRIPTION

FIG. **1** is a front perspective view of a tire showing the claimed design;
FIG. **2** is a front view thereof;
FIG. **3** is a rear view thereof;
FIG. **4** is a top plan view thereof, the bottom plan view being the same;
FIG. **5** is a right side view thereof;
FIG. **6** is a left side view thereof;
FIG. **7** is an enlarged view taken along line **7-7** in FIG. **1**;
FIG. **8** is an enlarged view of the portion **8-8** in FIG. **2**; and,
FIG. **9** is a cross-sectional view taken along line **9-9** in FIG. **8**.
In the drawings, the broken lines show portions of the tire that form no part of the claimed design.

1 Claim, 9 Drawing Sheets

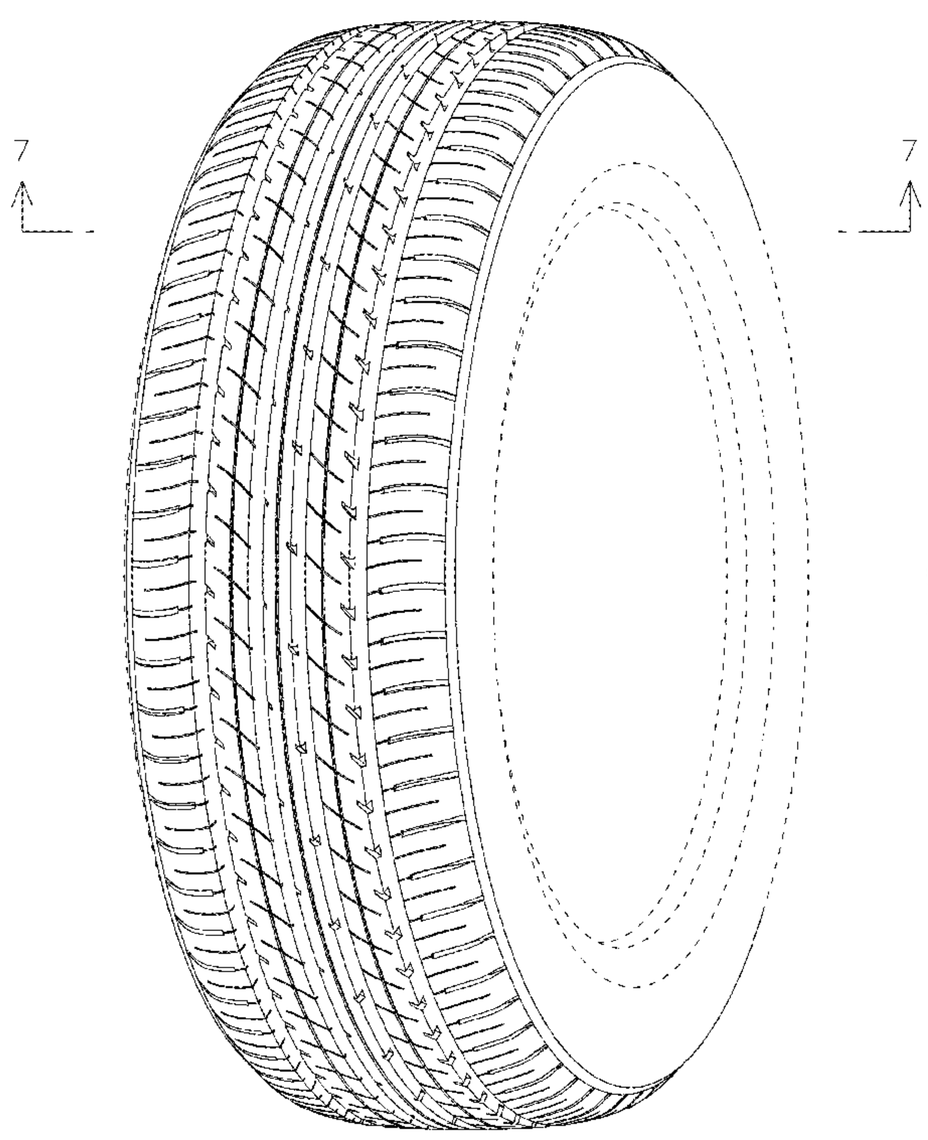

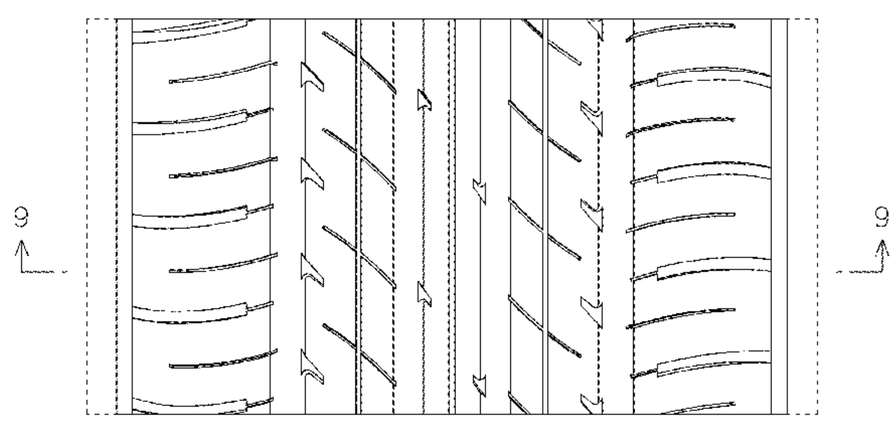

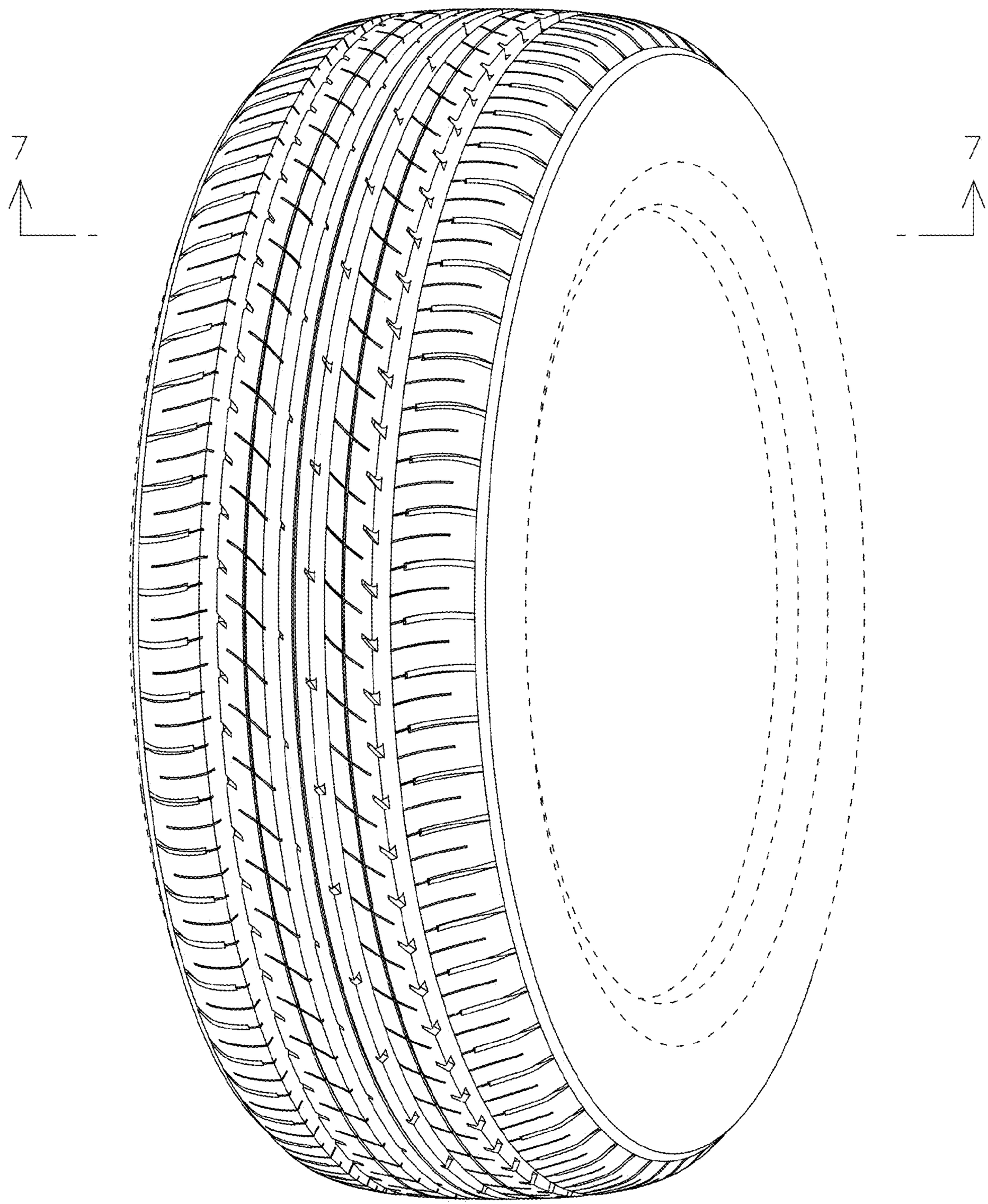

FIG. 1

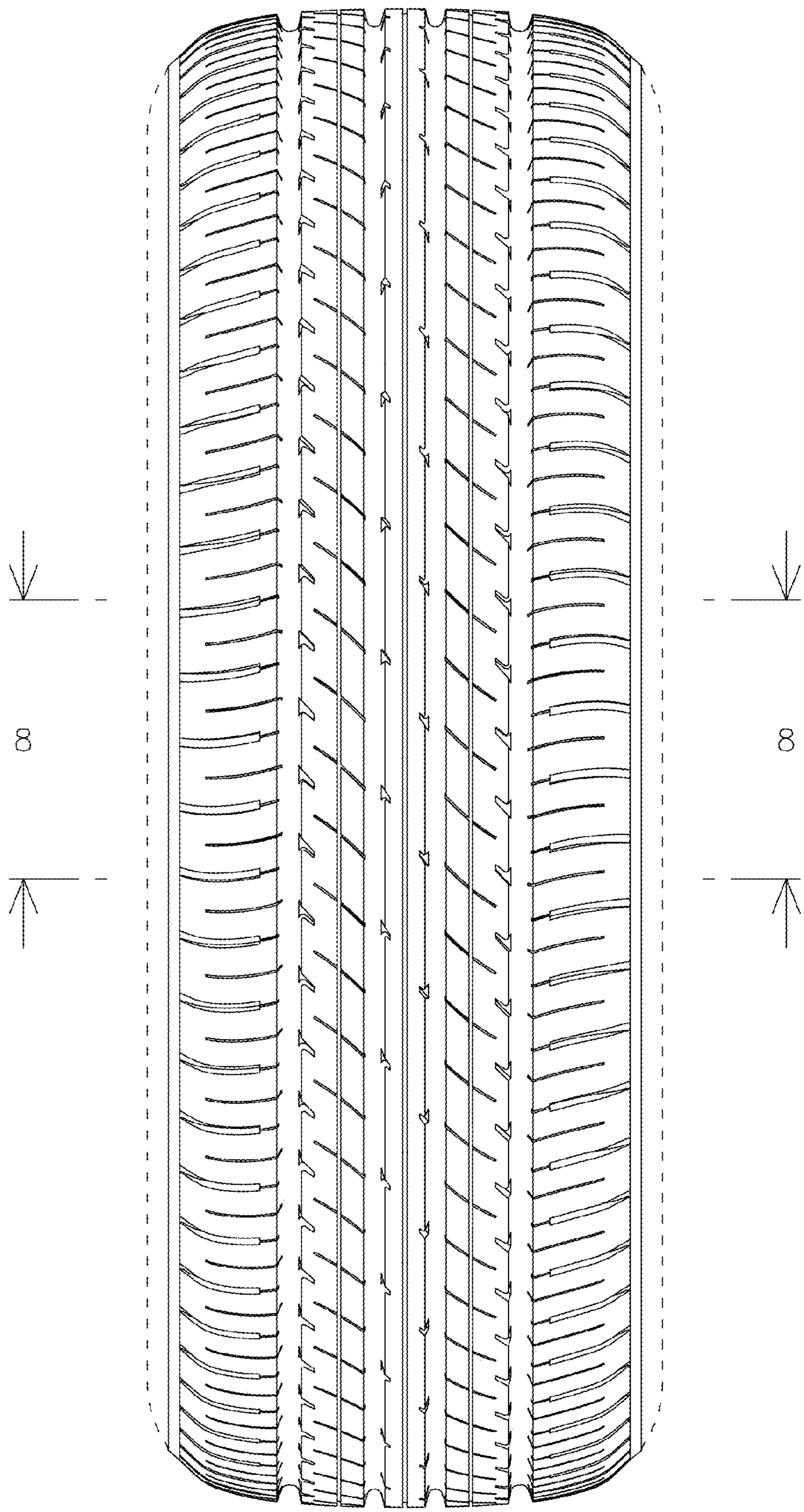

FIG. 2

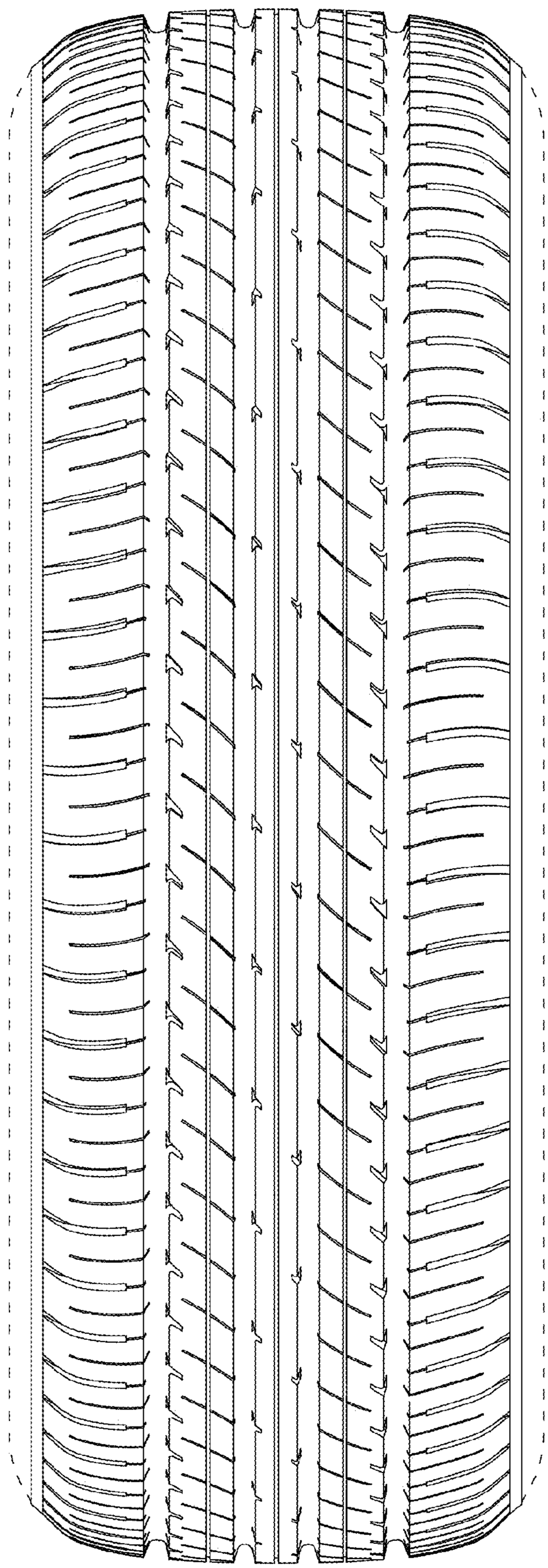

FIG. 3

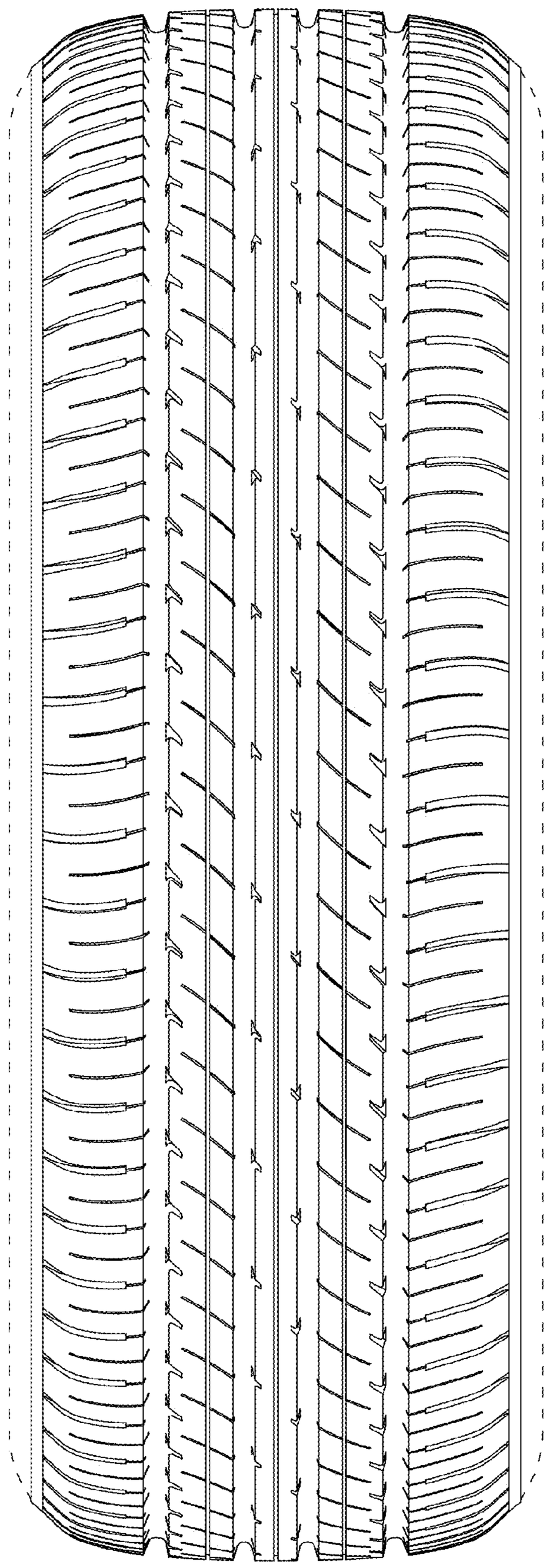

FIG. 4

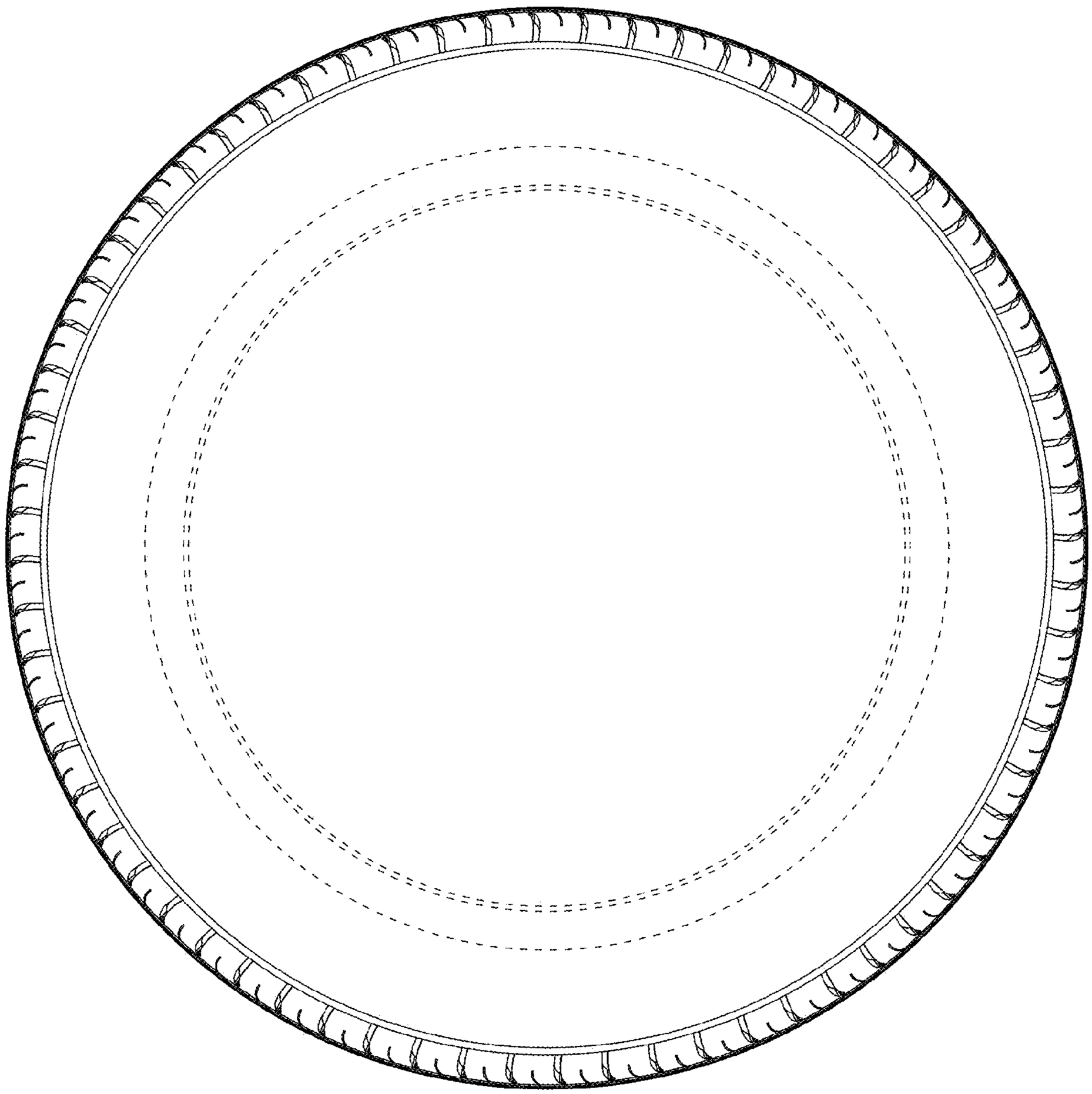

FIG. 5

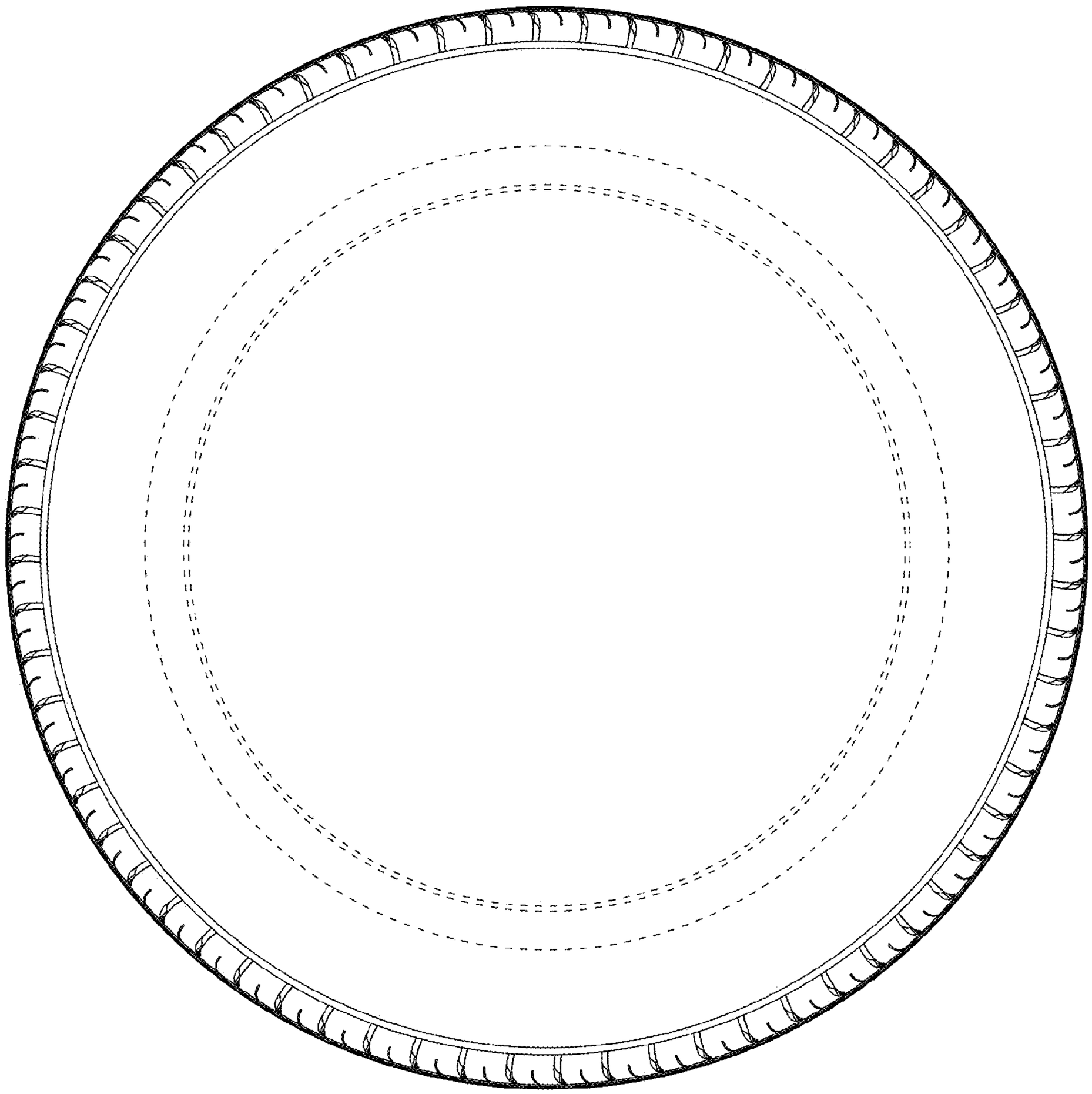

FIG. 6

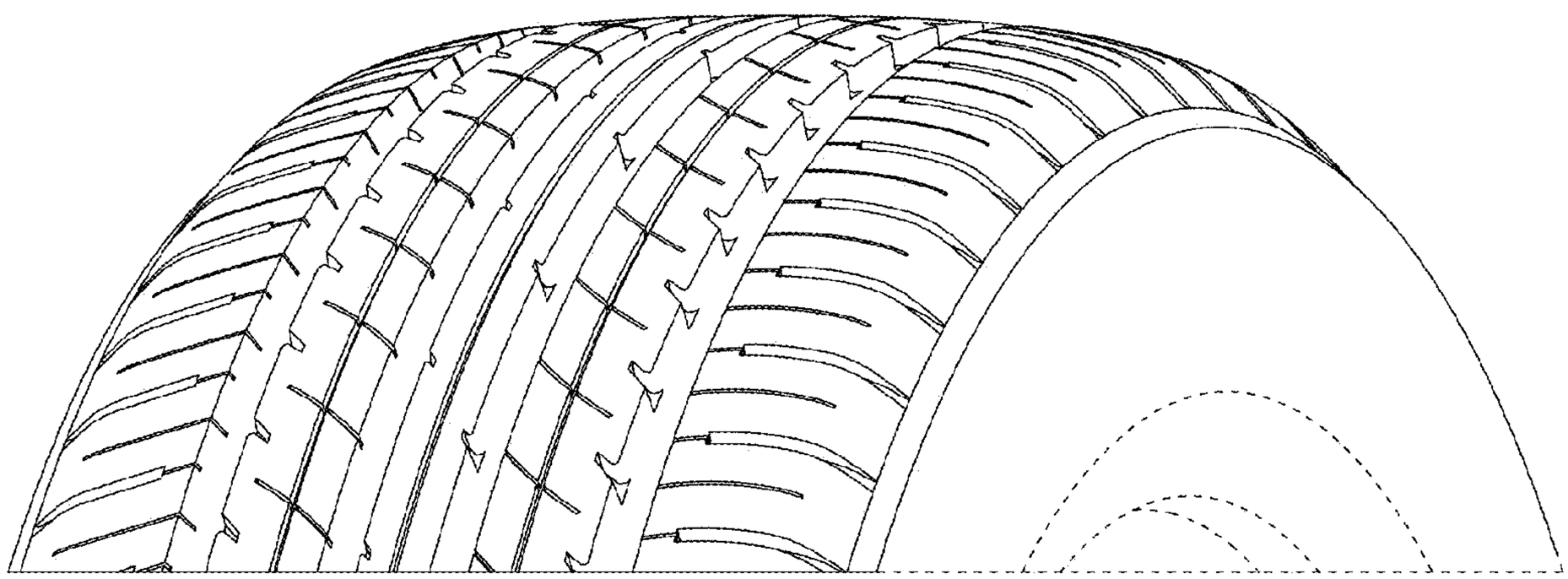

FIG. 7

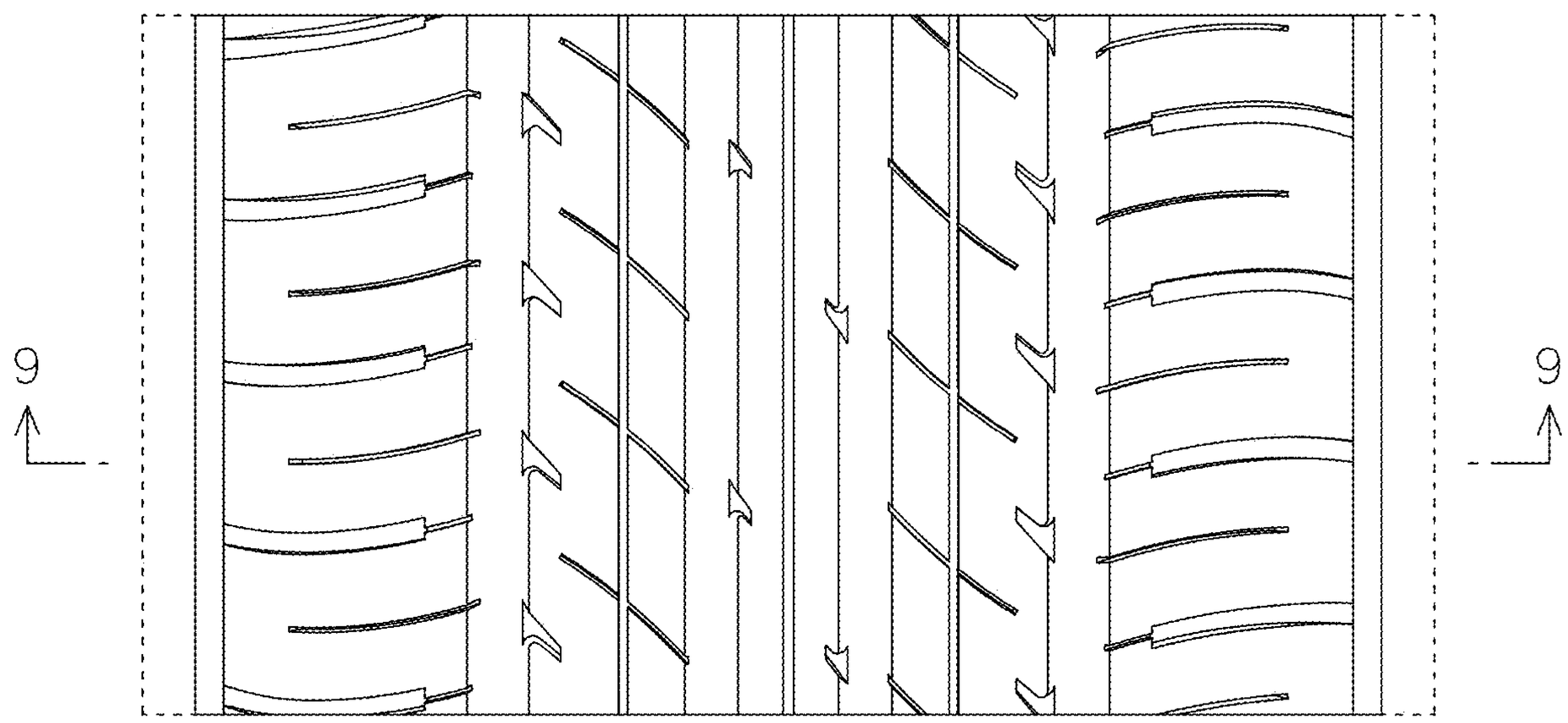

FIG. 8

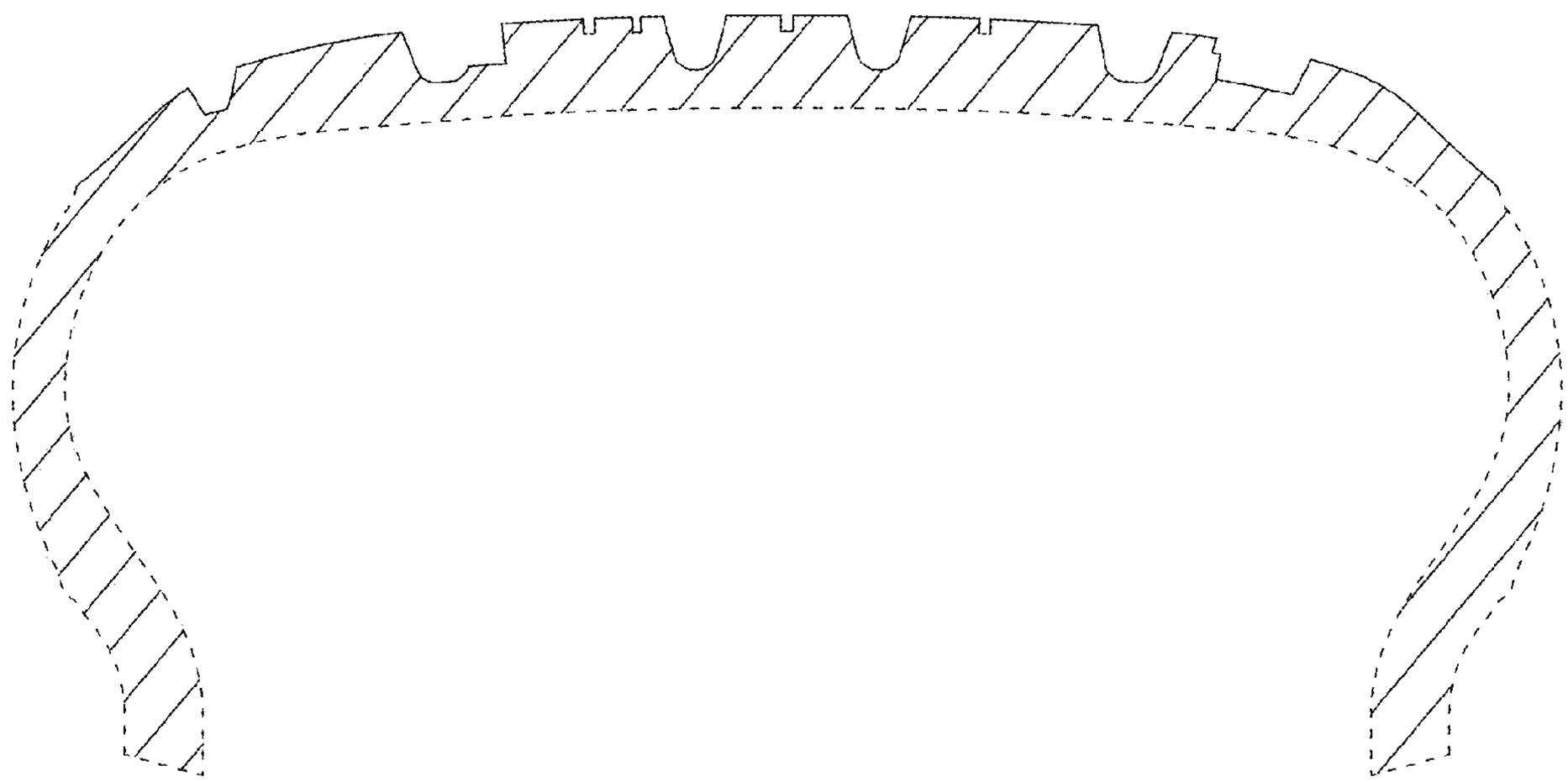

FIG. 9