US00D931745S

(12) United States Design Patent

Wang

(10) Patent No.: US D931,745 S
(45) Date of Patent: ** Sep. 28, 2021

(54) **TARGET BOARD USED WITH A LASER INSTRUMENT**

(71) Applicant: **AUTEL INTELLIGENT TECHNOLOGY CORP., LTD.**, Guangdong (CN)

(72) Inventor: **Yongshuai Wang**, Guangdong (CN)

(73) Assignee: **AUTEL INTELLIGENT TECHNOLOGY CORP., LTD.**, Shenzhen (CN)

(**) Term: **15 Years**

(21) Appl. No.: **29/710,975**

(22) Filed: **Oct. 28, 2019**

(30) **Foreign Application Priority Data**

Apr. 26, 2019 (CN) 201930198592.6

(51) **LOC (13) Cl.** **10-04**

(52) **U.S. Cl.**
USPC **D10/70**; D10/65

(58) **Field of Classification Search**
USPC D10/46, 70, 61, 62, 65, 66; D19/34.1
CPC G01B 11/2504; G01B 22/30; G01B 5/025; G01B 5/0002; G01B 5/0007; G01C 5/00; G01C 25/00; G01C 25/005; G01C 7/04; Y10S 33/21
See application file for complete search history.

(56) **References Cited**

U.S. PATENT DOCUMENTS

D330,503 S * 10/1992 Rana D19/34.1
D336,107 S * 6/1993 Goodman D19/34.1
D362,680 S * 9/1995 Tortolini D19/34.1
D377,192 S * 1/1997 He D19/34.1
5,708,748 A * 1/1998 Ohtomo G02B 5/0278 385/120
6,098,297 A * 8/2000 Belfiore G01B 11/27 33/286
6,334,539 B1 * 1/2002 Jajko A47B 65/00 211/42
6,471,081 B1 * 10/2002 Weiler A47B 57/583 211/184
D468,352 S * 1/2003 Chen D19/34.1
6,568,543 B1 * 5/2003 Schneider A47B 65/20 211/43
8,209,874 B1 * 7/2012 Tribble G01C 15/004 33/286
D678,948 S * 3/2013 Stravitz D19/90
(Continued)

OTHER PUBLICATIONS

Firecore Laser Target Card Plate for Red Lase Level | amazon.com Nov. 2016 [online]. © 1996-2021, Amazon.com, Inc [retrieved Apr. 27, 2021] from Internet: <https://www.amazon.com/Firecore-Target-Plate-Laser-Level/dp/B01N403T5I> (Year: 2016).*
(Continued)

Primary Examiner — Katherine Glennon

(57) **CLAIM**

I claim the ornamental design for a target board used with a laser instrument, as shown and described.

DESCRIPTION

FIG. **1** is a front elevational view of a target board used with a laser instrument showing my new design;
FIG. **2** is a back elevational view thereof;
FIG. **3** is a left side elevational view thereof;
FIG. **4** is a right side elevational view thereof;
FIG. **5** is a top plan view thereof;
FIG. **6** is a bottom plan view thereof; and,
FIG. **7** is a perspective view thereof.
The broken line portions in FIG. **6** form no part of the claimed design.

1 Claim, 6 Drawing Sheets

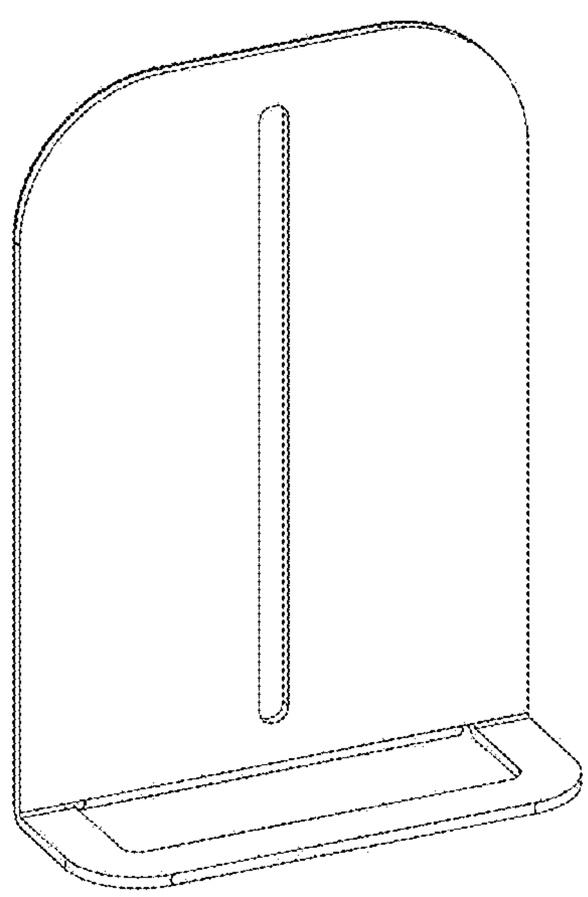

(56) **References Cited**

U.S. PATENT DOCUMENTS

D825,363	S *	8/2018	Ave	D10/96
D883,110	S *	5/2020	Cai	D10/70
D883,112	S *	5/2020	Cai	D10/70
10,921,426	B2 *	2/2021	Tang	G01S 7/4052
2002/0125201	A1 *	9/2002	Lamming	A47B 65/20 211/43
2010/0170099	A1 *	7/2010	Krasko	G01B 5/0004 33/286
2018/0202805	A1 *	7/2018	Unger	G01C 3/08
2020/0271268	A1 *	8/2020	Govekar	F16M 11/046
2020/0300623	A1 *	9/2020	Earley	G01C 9/24
2021/0102808	A1 *	4/2021	Howard	G01C 15/02

OTHER PUBLICATIONS

Autel ADAS Laser Accessory | garageautoequipment.com; no posting date [online]. © 2021 GarageAutomotiveEquipment.co [retrieved Apr. 27, 2021] from Internet: <https://www.garageautoequipment.com/Laser-ADAS-Accessory-p/adasaccessory.htm> (Year: 2021).*

Trademarks Copyright Information Disclaimer of Warranties and Limitation of Liabilities for Services and Support |maxisysadas.com; Oct. 2019 [online][retrieved Apr. 27, 2021] from Internet:<https://www.maxisysadas.com/adascms/u/cms/www/201910/ADAS%20MA600%20Calibration%20Toolset%20User%20Manual.pdf> pp. 3-7 (Year: 2021).*

* cited by examiner

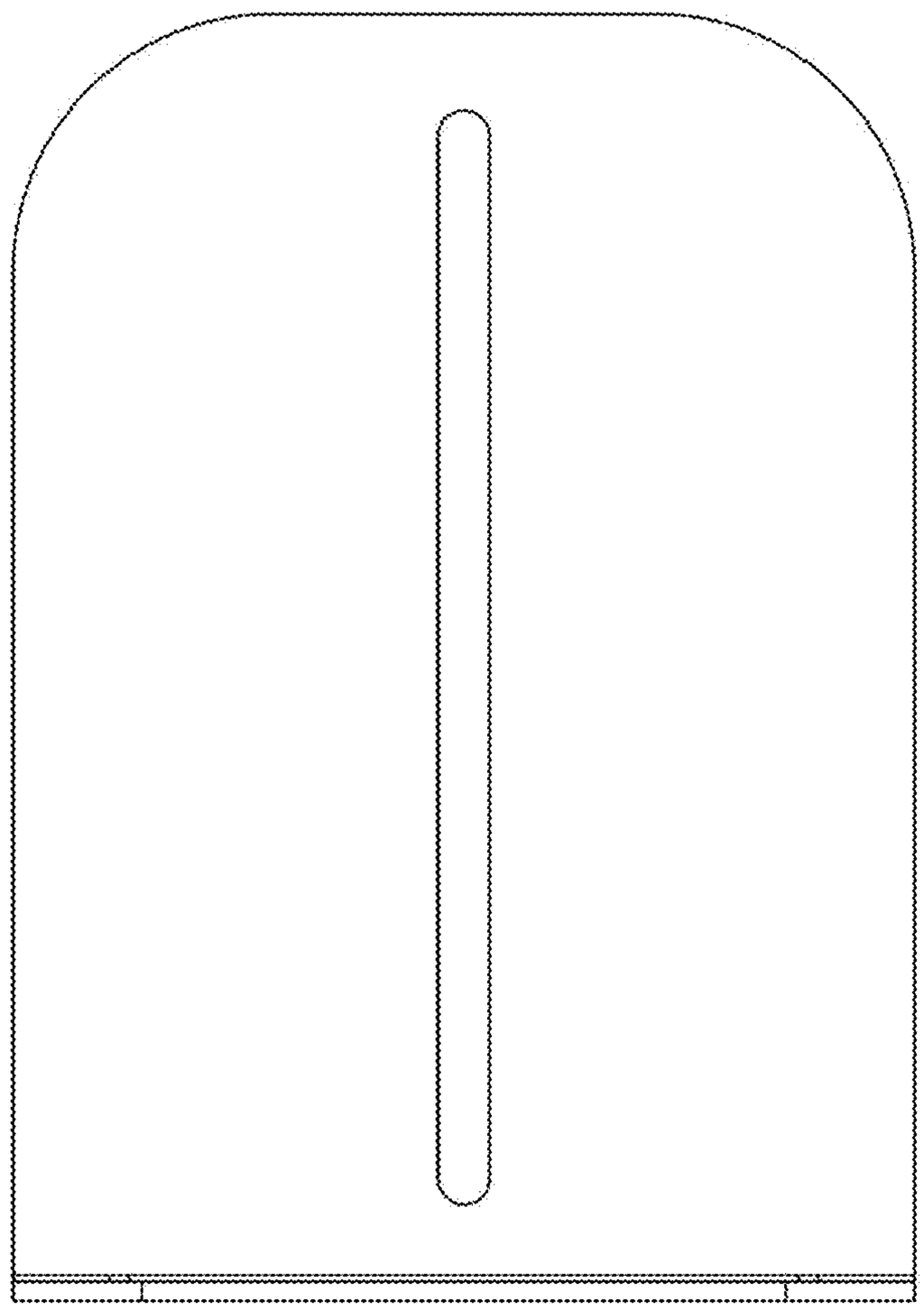

FIG. 1

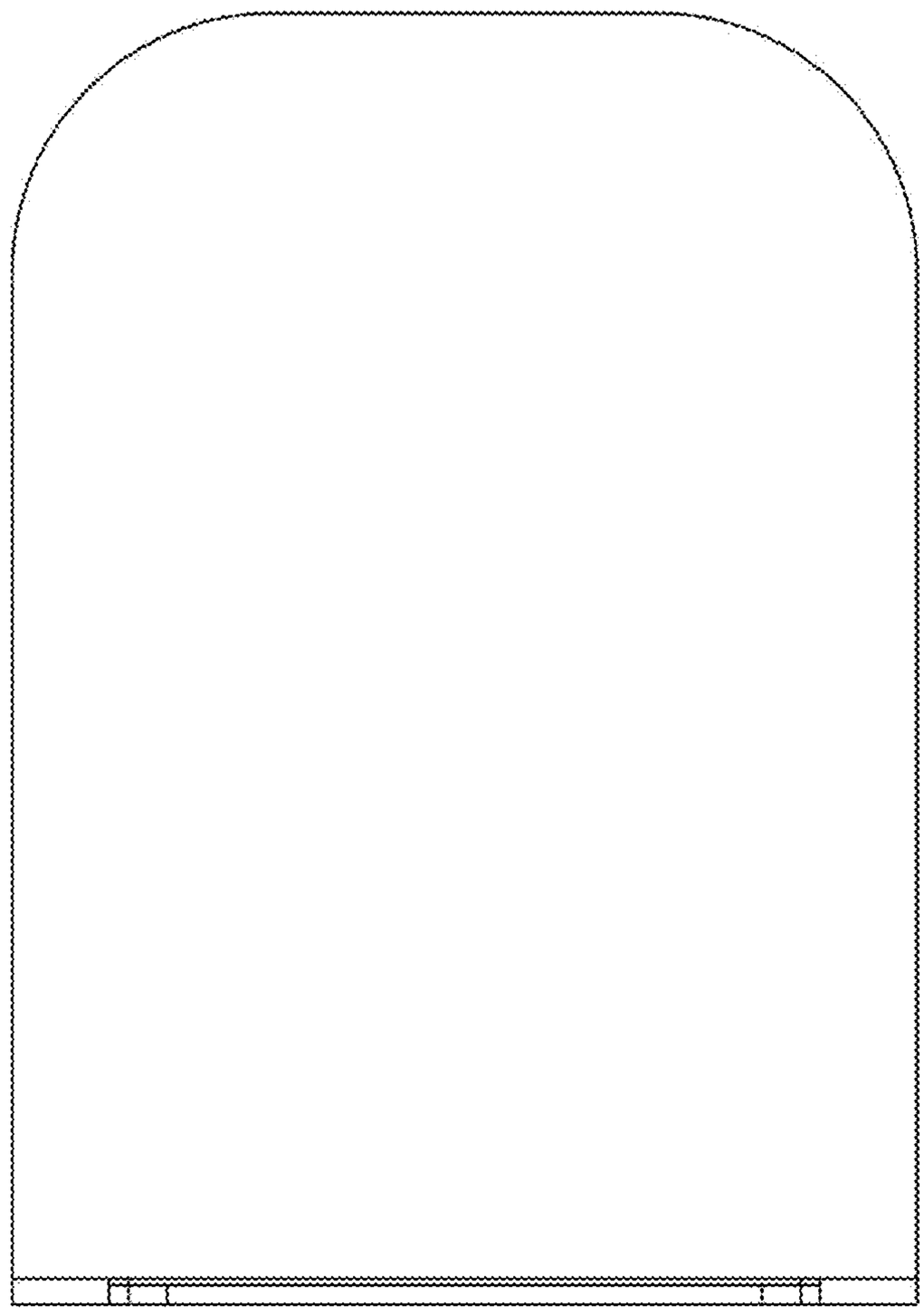

FIG. 2

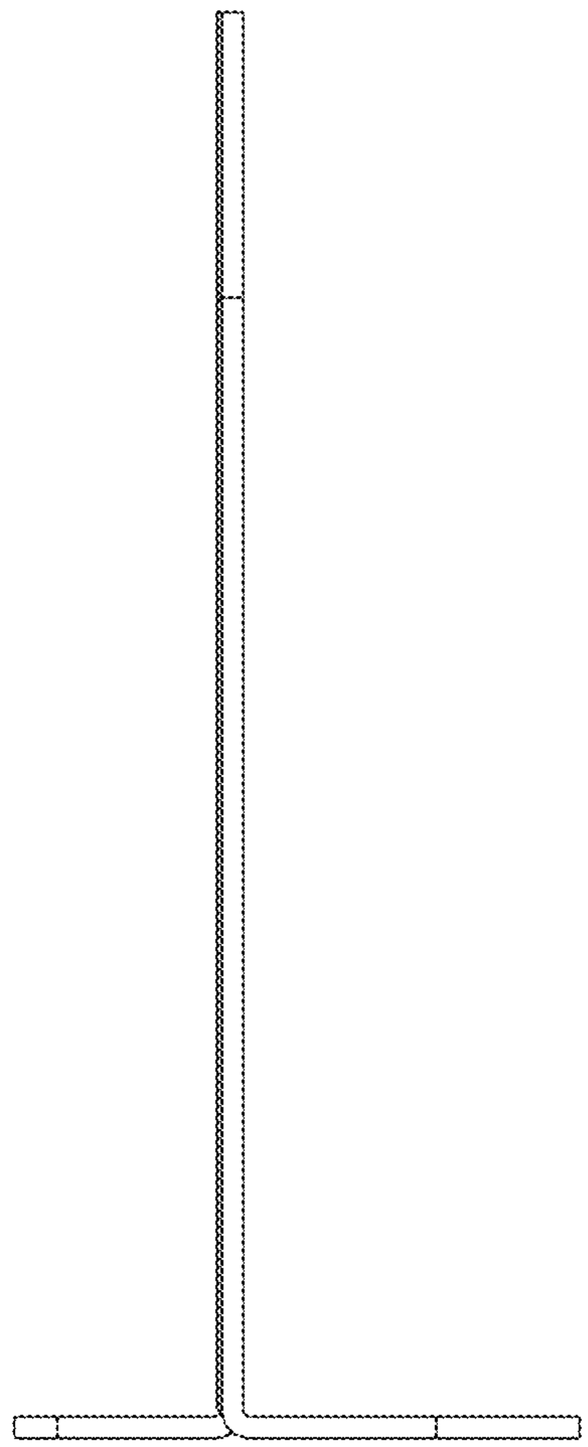

FIG. 3

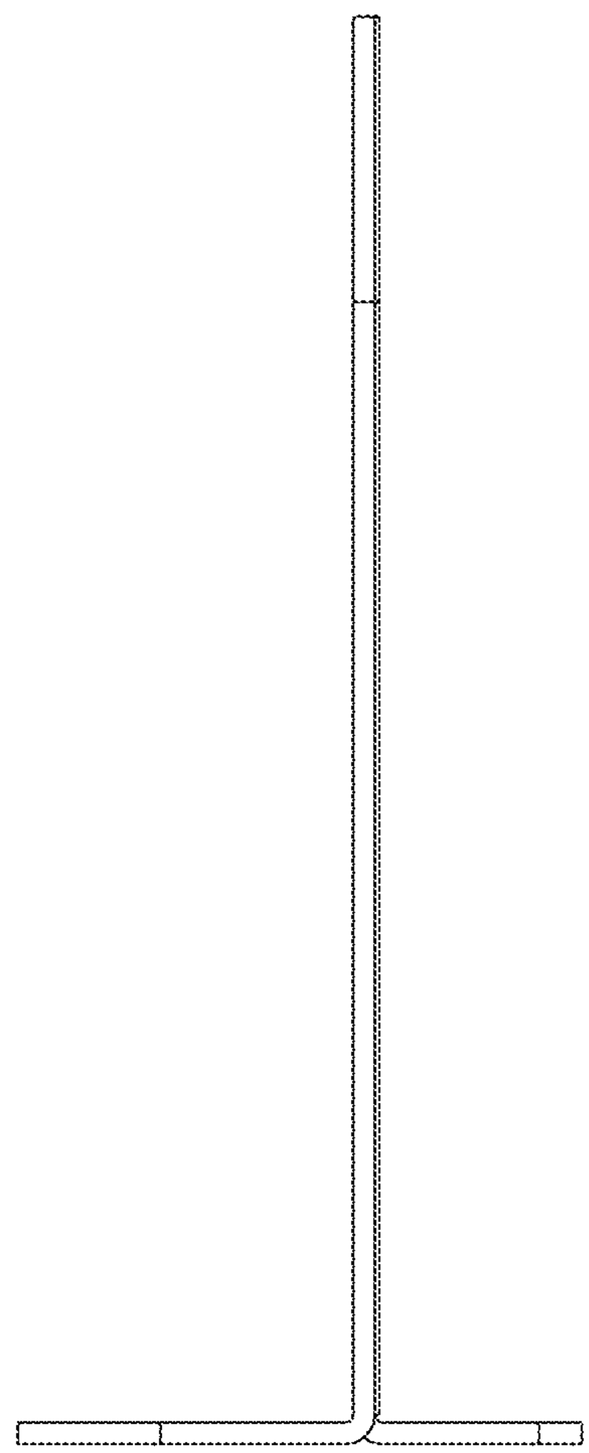

FIG. 4

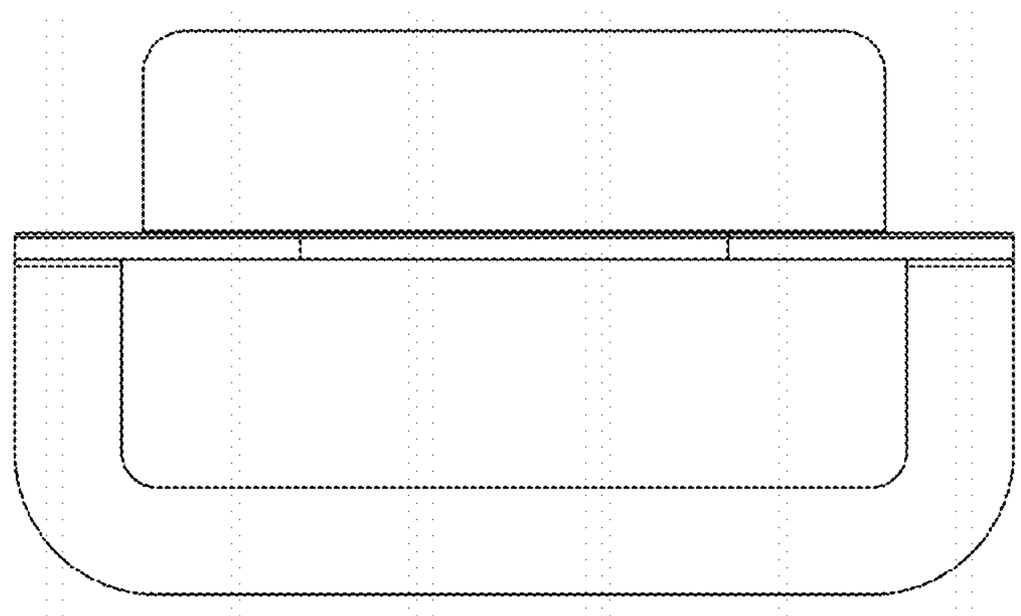

FIG. 5

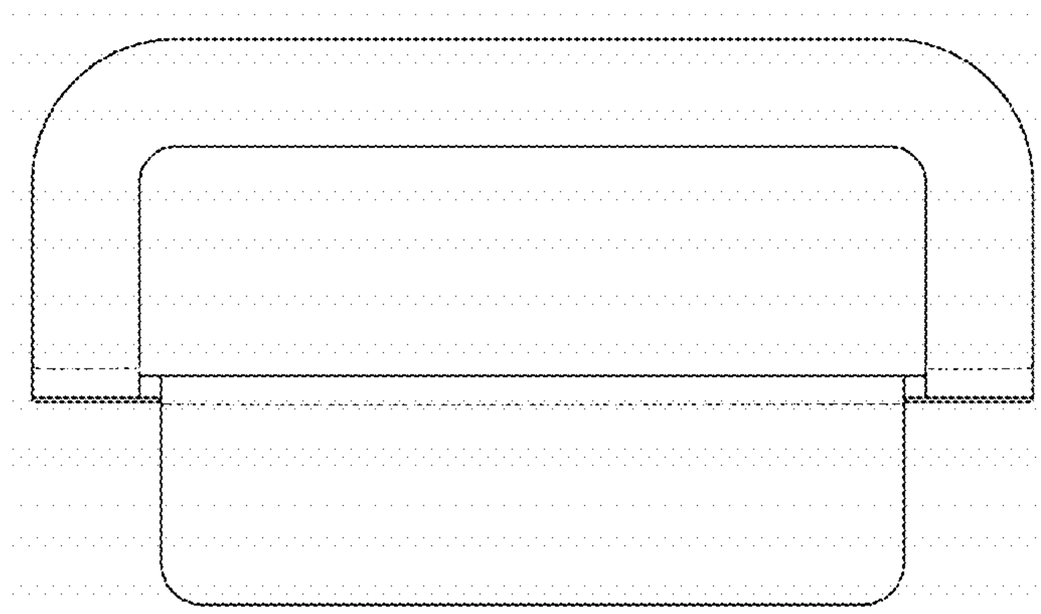

FIG. 6

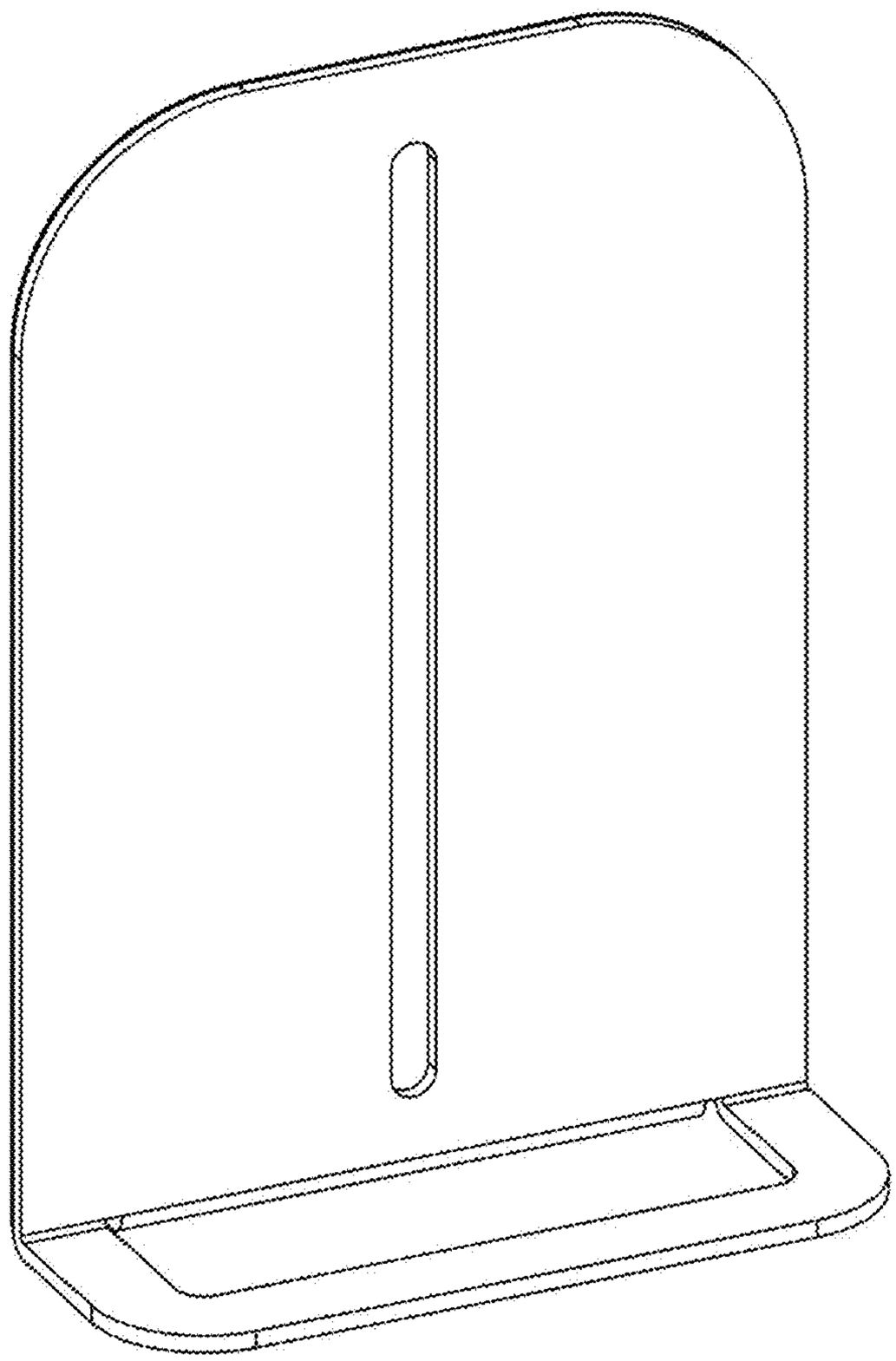

FIG. 7