US00D930551S

(12) United States Design Patent
Suckling

(10) Patent No.: US D930,551 S
(45) Date of Patent: ** Sep. 14, 2021

(54) **CANOPY FOR VEHICLE**

(71) Applicant: **Utemaster NZ Limited**, Kerepehi (NZ)

(72) Inventor: **Marshall Suckling**, Thames (NZ)

(73) Assignee: **Utemaster NZ Limited**, Kerepehi (NZ)

(**) Term: **15 Years**

(21) Appl. No.: **29/718,117**

(22) Filed: **Dec. 20, 2019**

(30) **Foreign Application Priority Data**

Jun. 25, 2019 (NZ) 426186

(51) **LOC (13) Cl.** **12-16**

(52) **U.S. Cl.**
USPC **D12/401**

(58) **Field of Classification Search**
USPC D12/106, 400, 401, 402, 403, 404, 405, D12/406, 412, 414; D21/561
CPC B60J 7/198; B60J 7/1607; B60J 11/06; B60P 7/00; B60P 7/02; B60P 7/04; B60P 7/06; B60P 7/141; B60P 3/32; B60P 3/38; B60P 3/341
See application file for complete search history.

(56) **References Cited**

U.S. PATENT DOCUMENTS

2,925,303	A	*	2/1960	Lane	B60J 7/104 296/102
D211,017	S	*	5/1968	Willison	D12/404
D232,822	S	*	9/1974	Knoss et al.	D12/404
4,063,762	A	*	12/1977	Williams	B60P 3/341 296/167
D324,015	S	*	2/1992	Quiniones	D12/404
D325,551	S	*	4/1992	Quiniones	D12/404
D326,441	S	*	5/1992	Rogers	D12/404
D328,062	S	*	7/1992	Burgess	D12/404
D329,837	S	*	9/1992	Rogers	D12/404
D332,934	S	*	2/1993	Brown	D12/181
5,314,225	A	*	5/1994	Gordon	B60J 7/106 296/10
D379,173	S	*	5/1997	Quiniones	D12/404
D383,432	S	*	9/1997	Starr	D12/404
D387,029	S	*	12/1997	Heinemann	D12/404
D388,049	S	*	12/1997	Reardon	D12/403
D403,652	S	*	1/1999	Starr	D12/404
D431,225	S	*	9/2000	Perlman	D12/404
D444,445	S	*	7/2001	Schroeder	D12/404
D610,067	S	*	2/2010	Frankham	D12/404

(Continued)

Primary Examiner — Christian P. McLean
Assistant Examiner — Adam C Mager
(74) *Attorney, Agent, or Firm* — Studebaker & Brackett PC

(57) **CLAIM**

The ornamental design for a canopy for vehicle, as shown and described.

DESCRIPTION

FIG. **1** is a top perspective closed view, showing my new design for a canopy for vehicle,
FIG. **2** is a top closed view thereof,
FIG. **3** is a bottom closed view thereof,
FIG. **4** is a front closed view thereof,
FIG. **5** is a rear closed view thereof,
FIG. **6** is a right side closed view thereof,
FIG. **7** is a left side closed view thereof,
FIG. **8** is a top perspective open view thereof,
FIG. **9** is a top open view thereof,
FIG. **10** is a bottom open view thereof,
FIG. **11** is a front open view thereof,
FIG. **12** is a rear open view thereof,
FIG. **13** is a right side open view thereof; and,
FIG. **14** is a left side open view thereof.
The broken line showing is included for the purpose of illustrating portions of the canopy for vehicle that form no part of the claimed design.

1 Claim, 14 Drawing Sheets

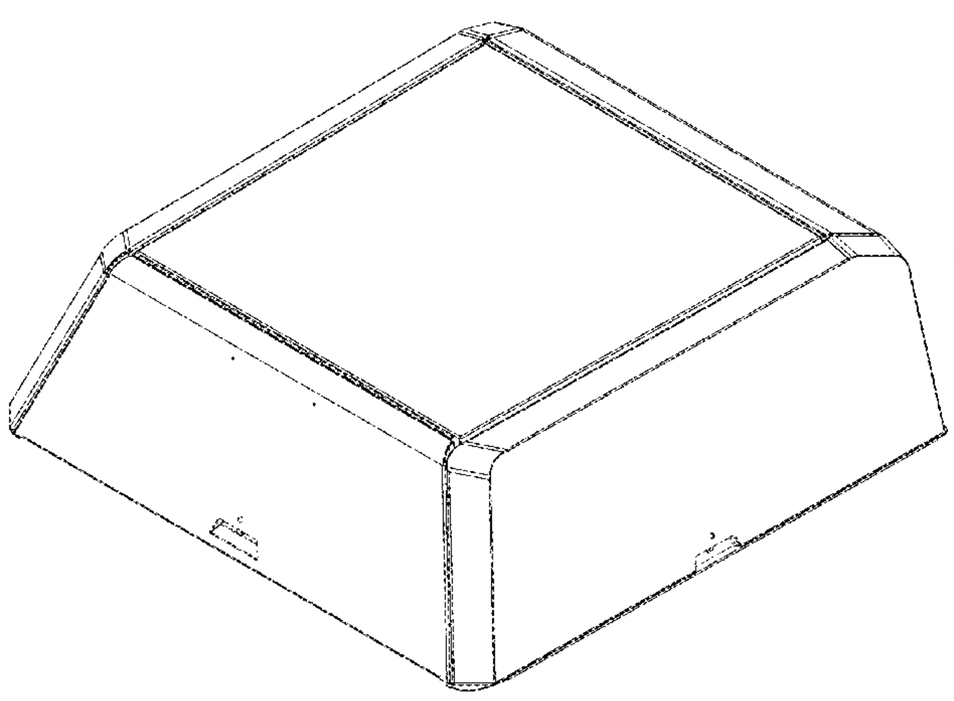

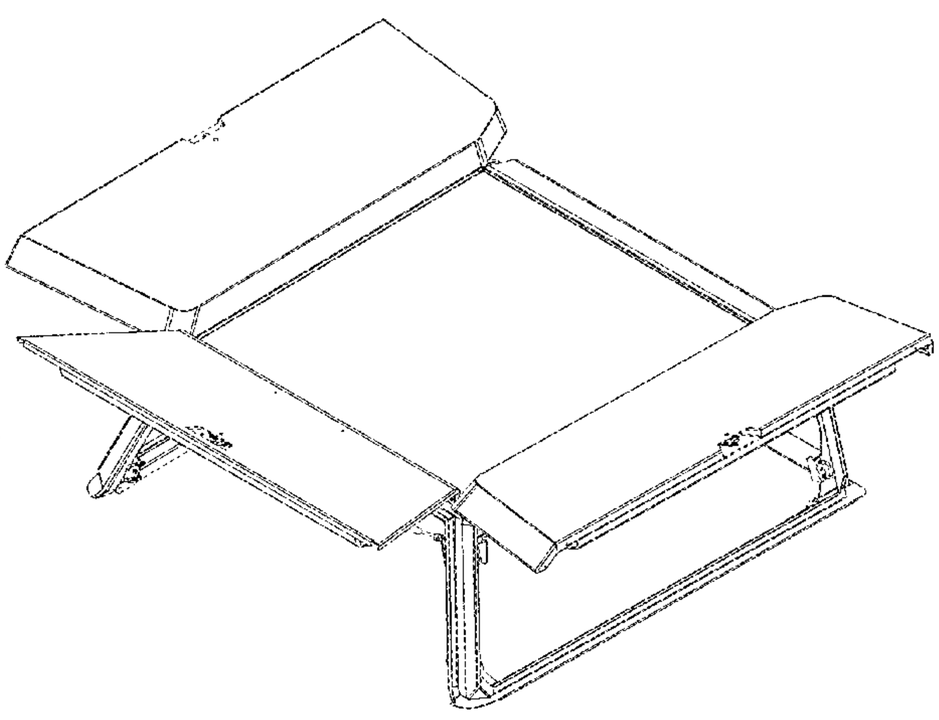

(56) **References Cited**

U.S. PATENT DOCUMENTS

D623,583	S *	9/2010	Girardi	D12/404
D857,609	S *	8/2019	Rohr	D12/401
2003/0038505	A1*	2/2003	Sisson	B60J 7/198 296/164
2003/0071483	A1*	4/2003	Sutton	B60J 1/16 296/146.16
2008/0067830	A1*	3/2008	Frankham	B60J 7/106 296/100.02
2010/0327618	A1*	12/2010	Soldatelli	B60J 7/1621 296/100.1
2020/0130485	A1*	4/2020	Ireland	E05B 79/10
2020/0398644	A1*	12/2020	Voss	B60H 1/262
2021/0114445	A1*	4/2021	Deckard	B60J 7/141

* cited by examiner

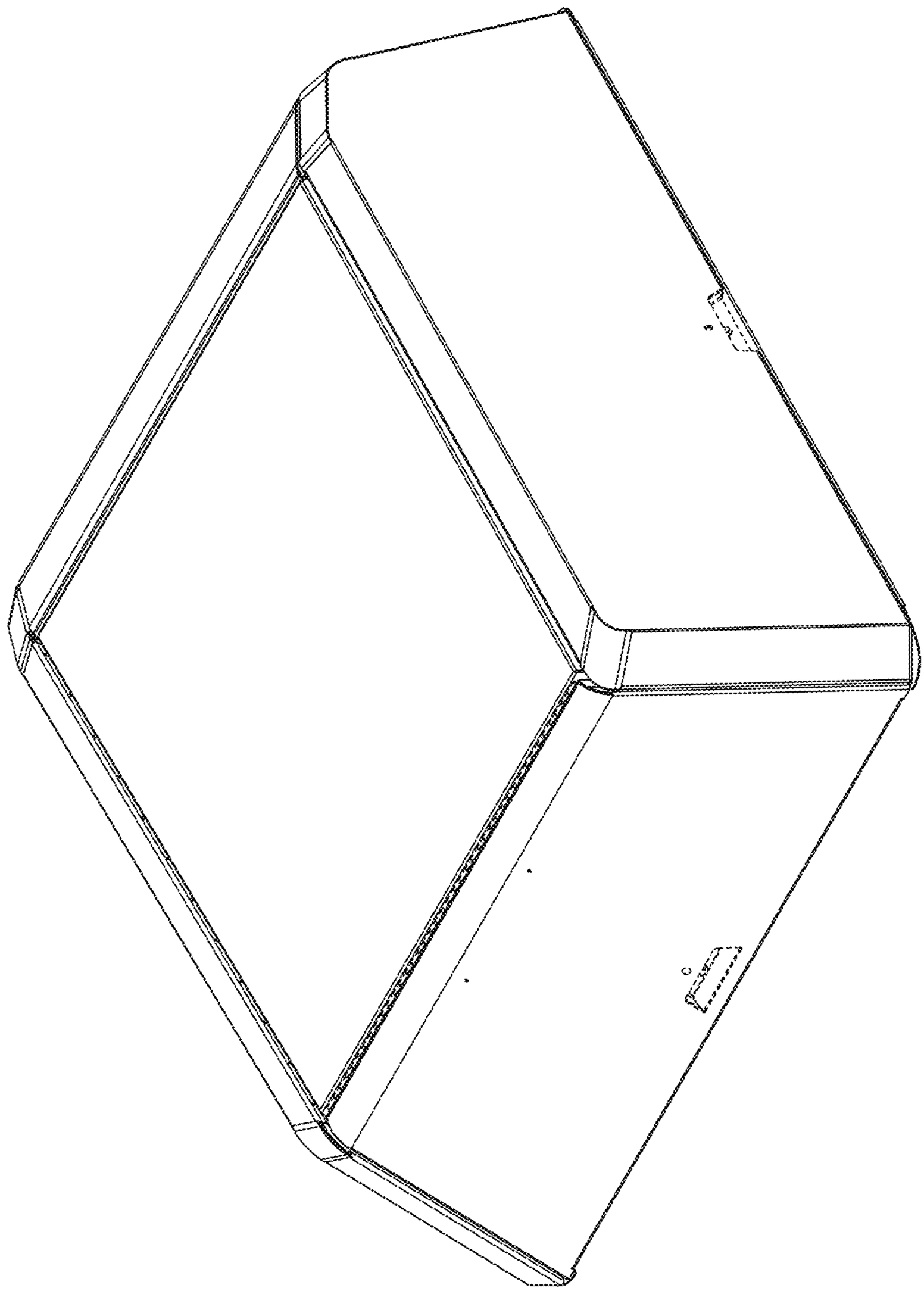

FIG. 1

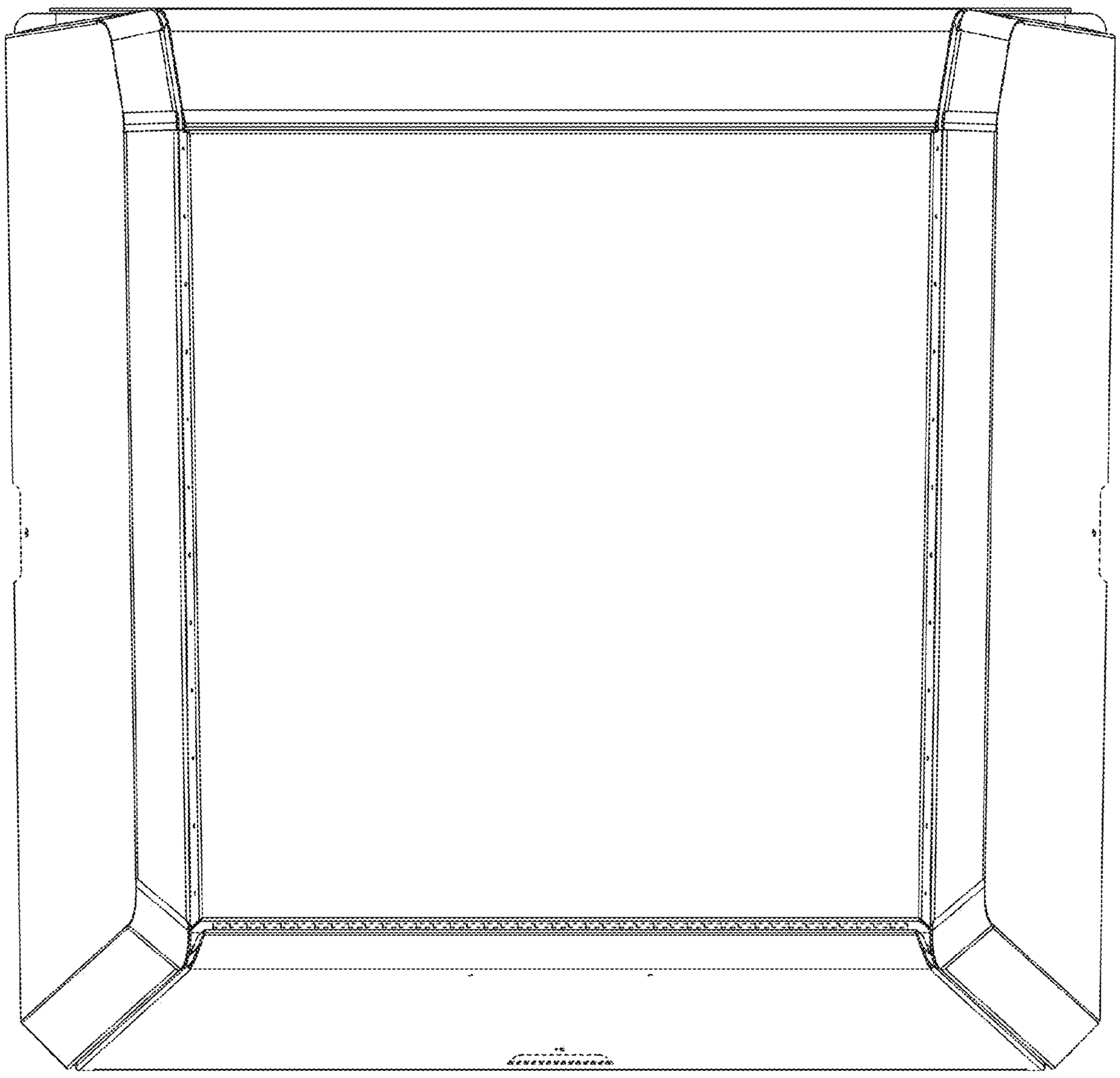

FIG. 2

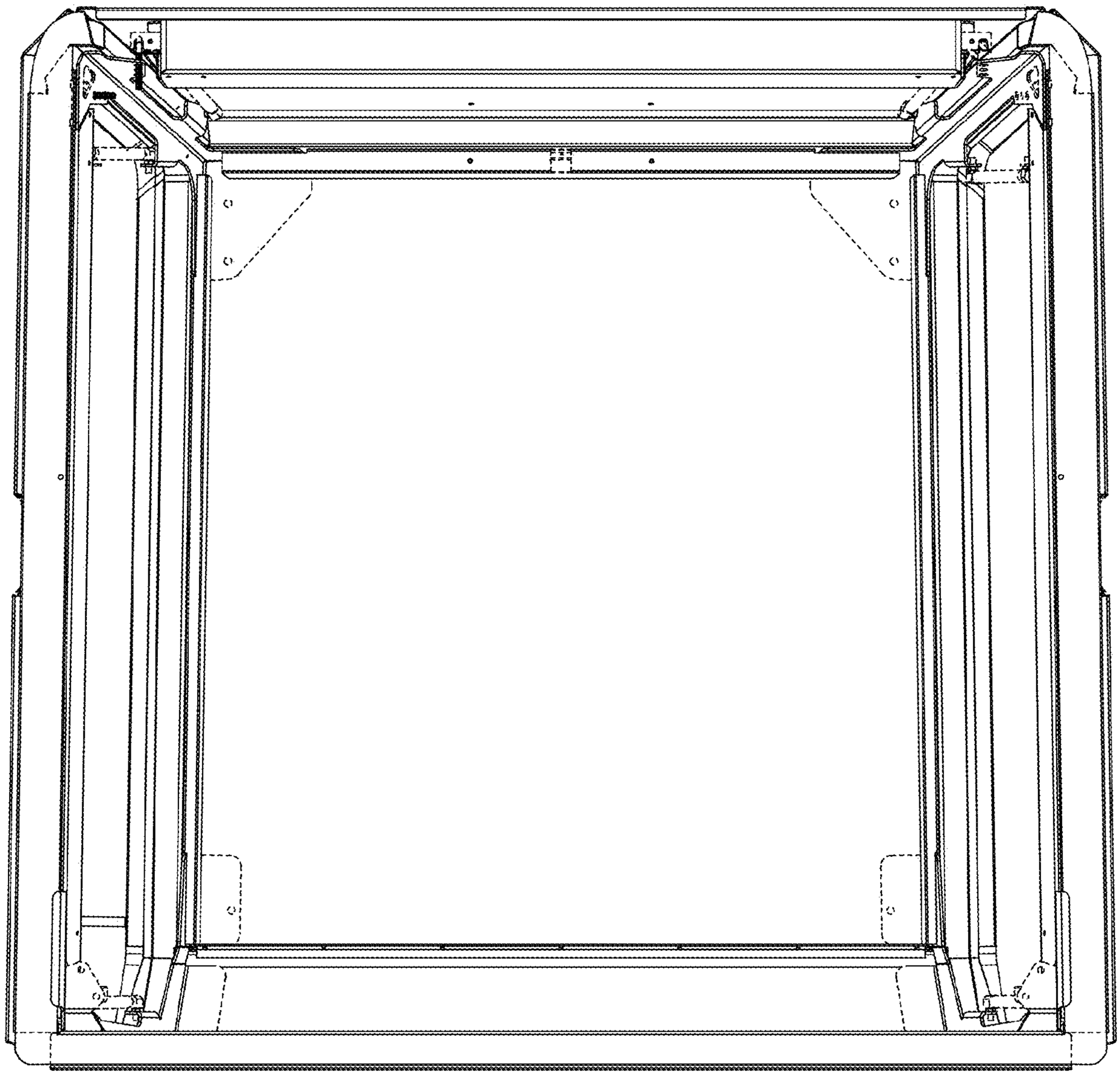

FIG. 3

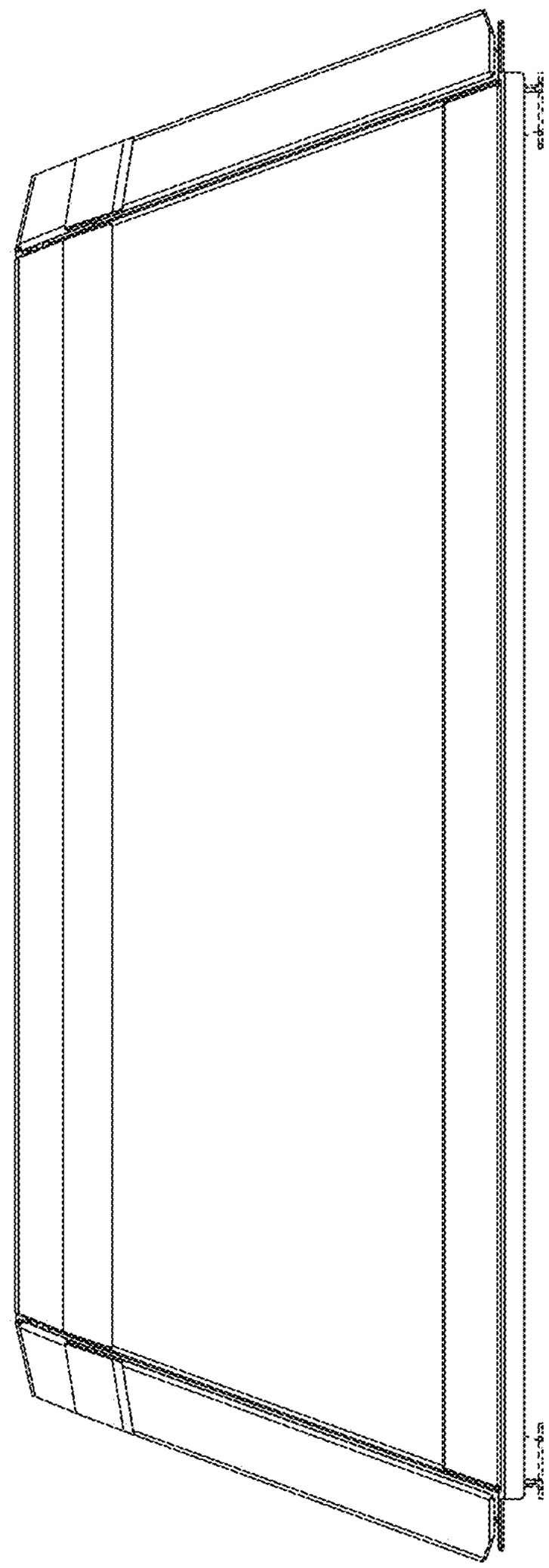

FIG. 4

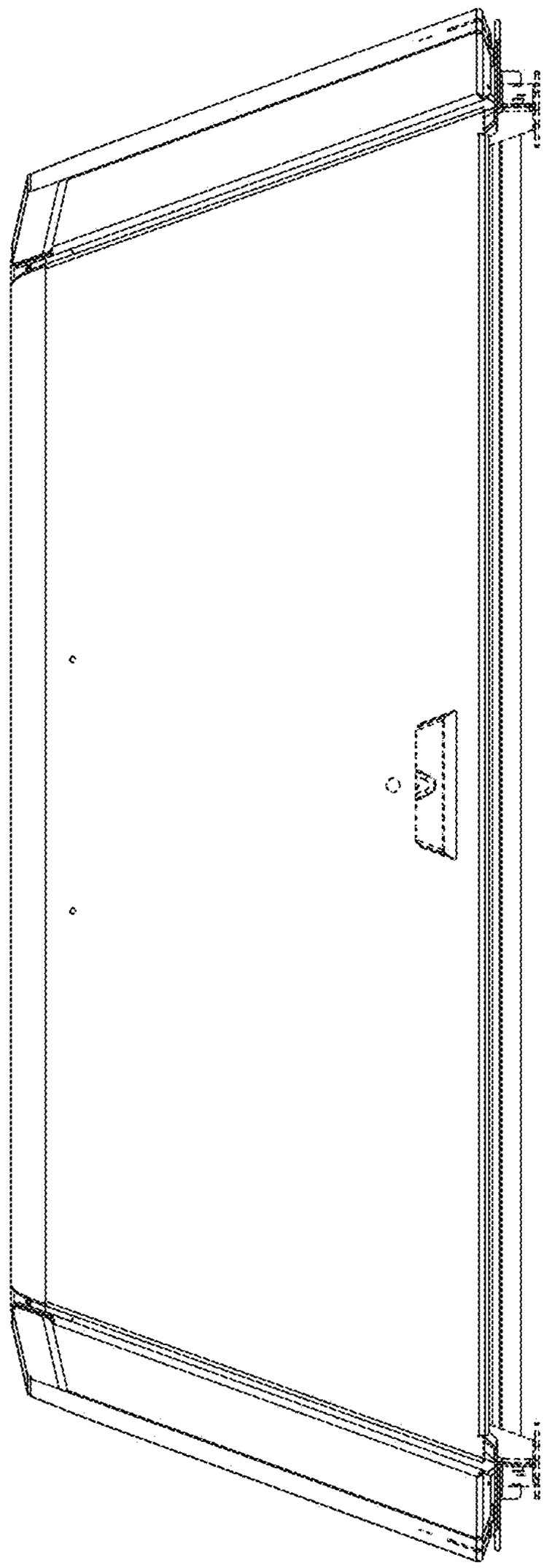

FIG. 5

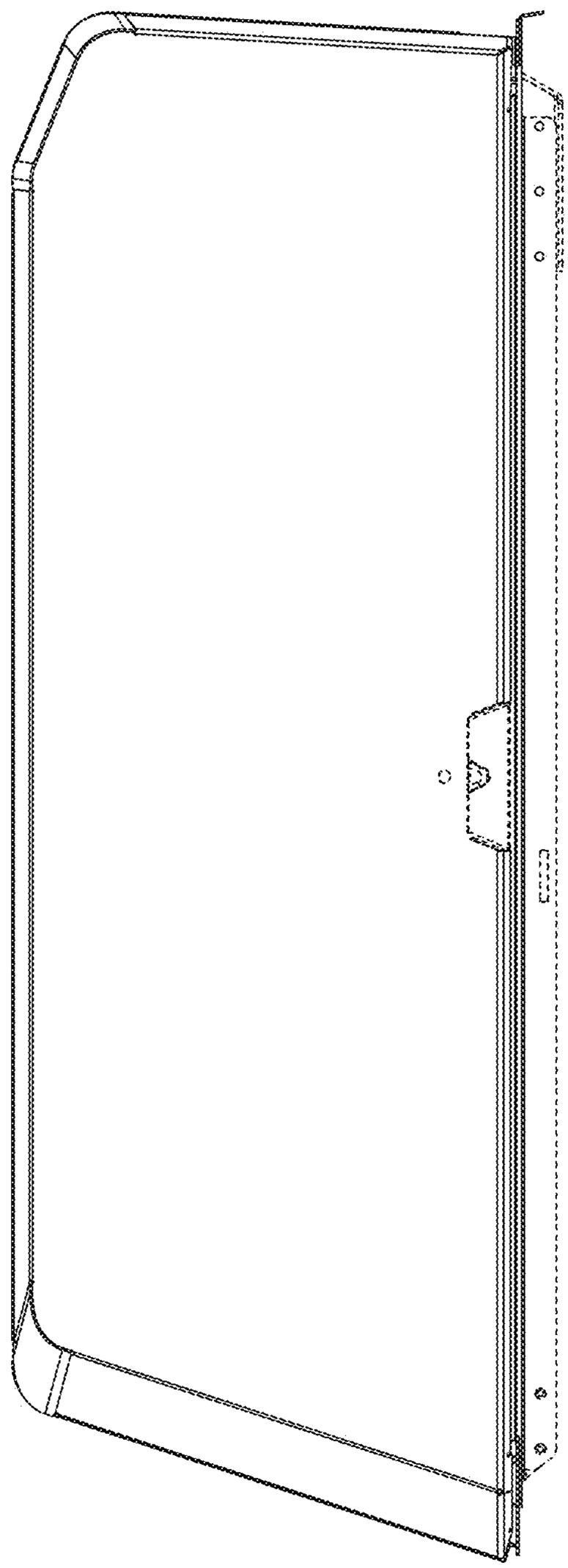

FIG. 6

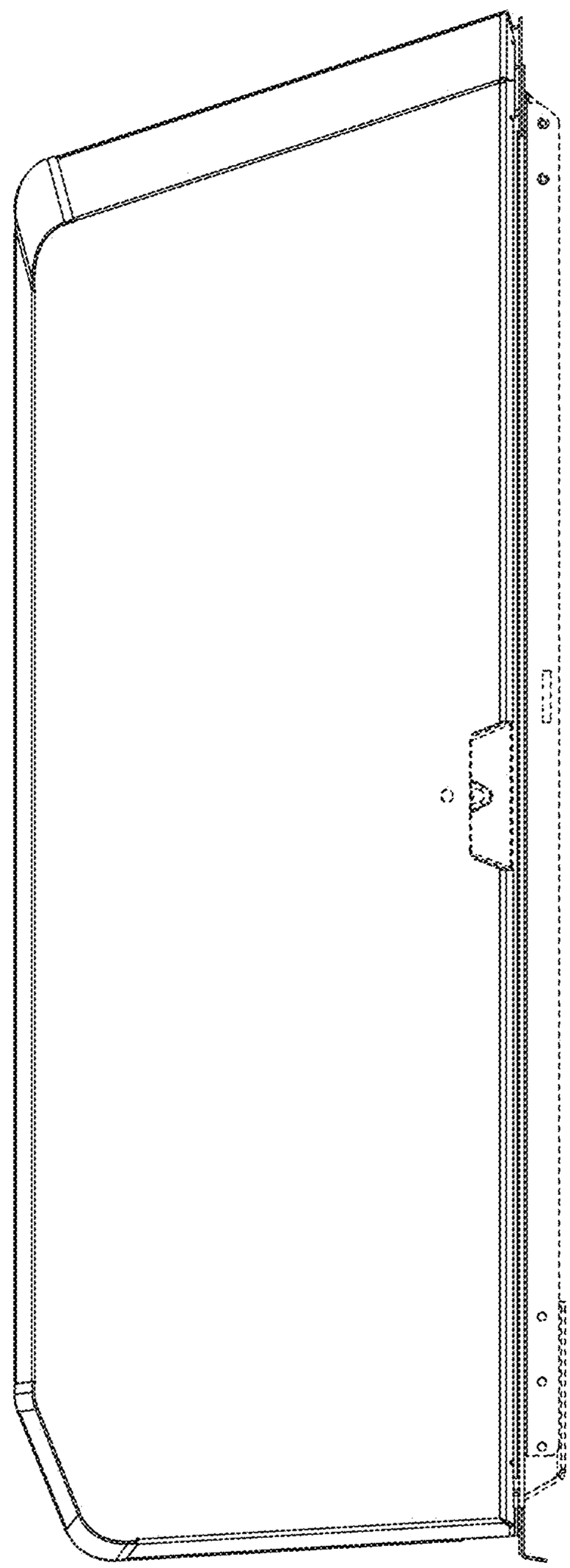

FIG. 7

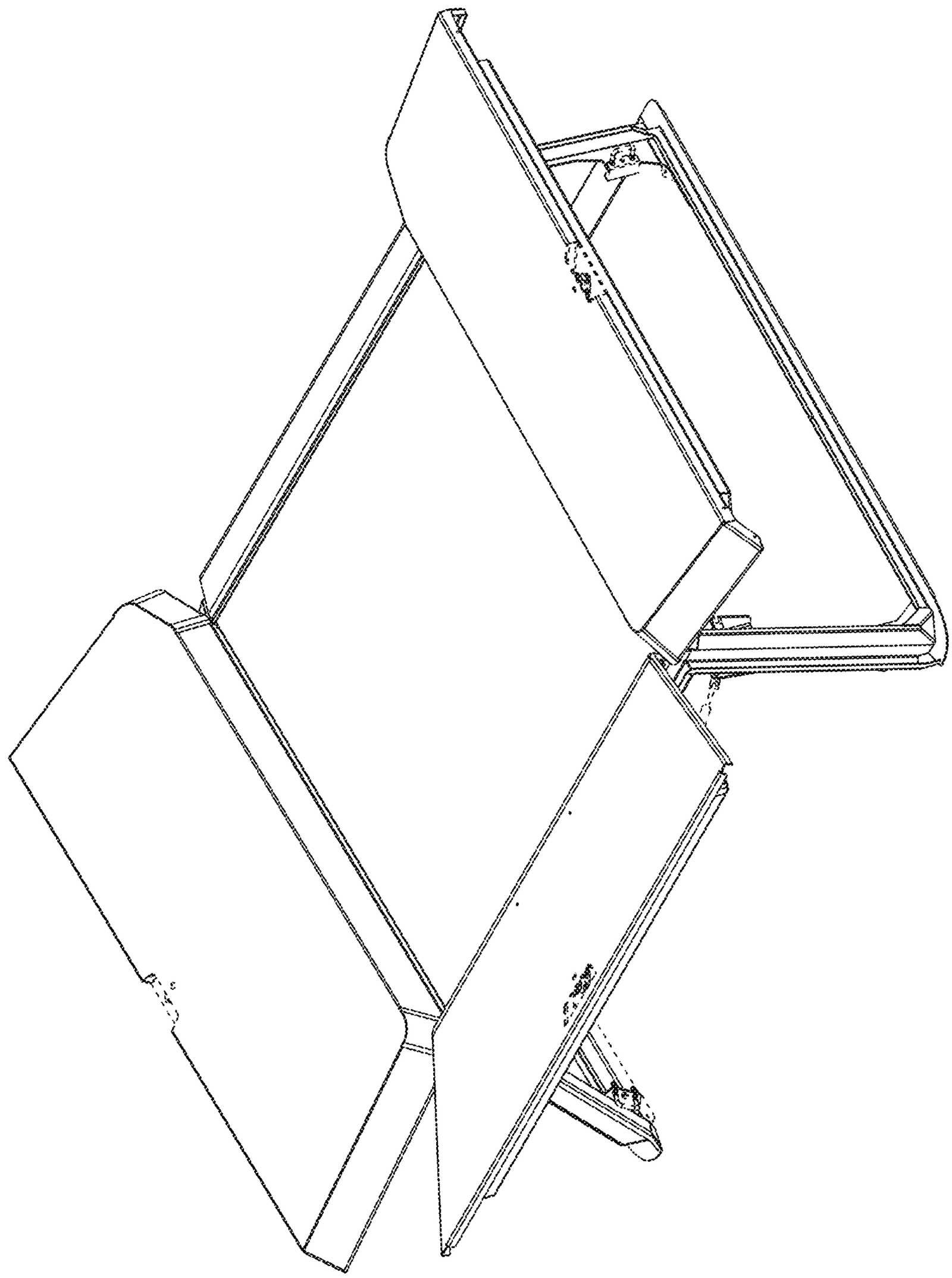

FIG. 8

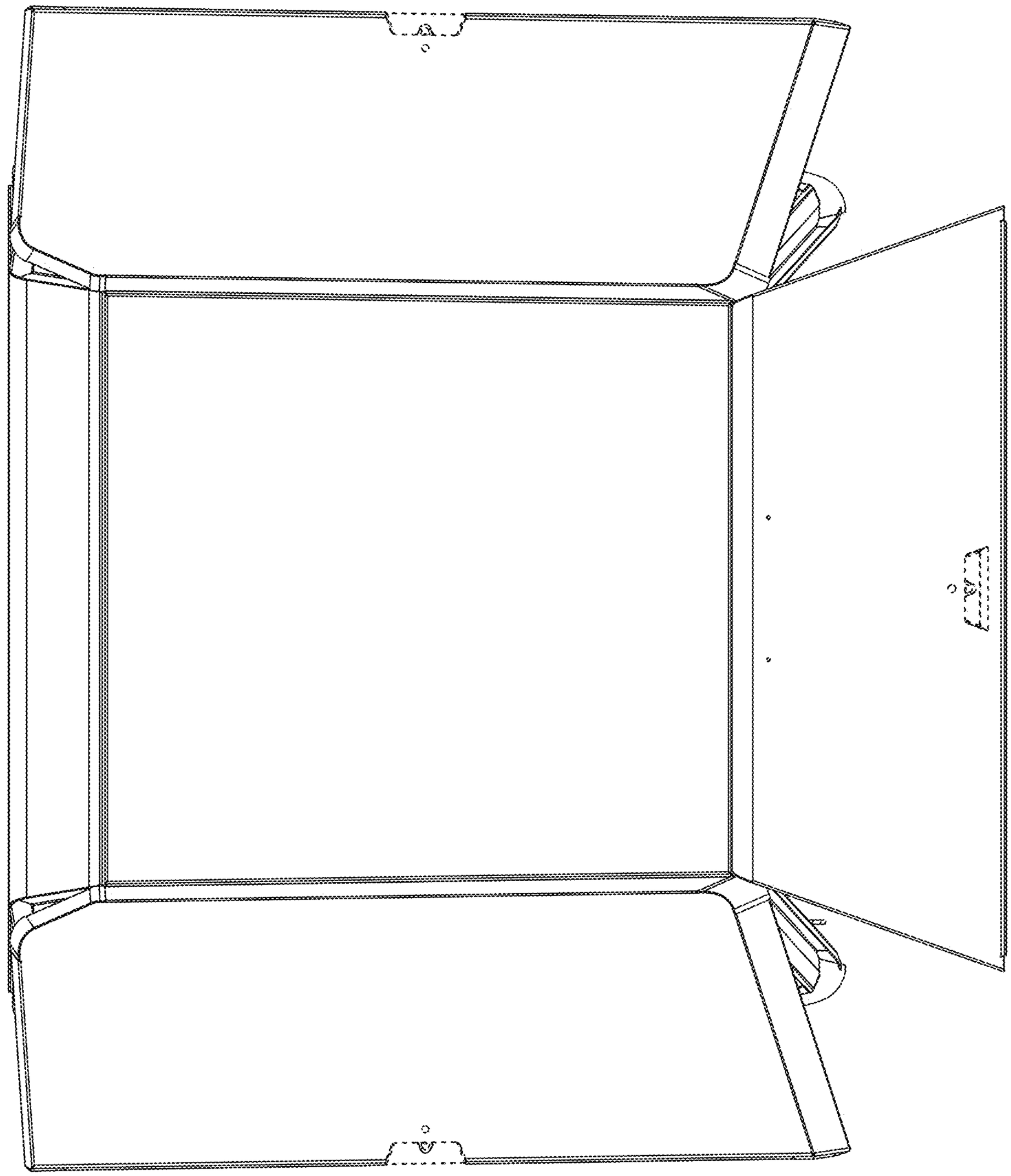

FIG. 9

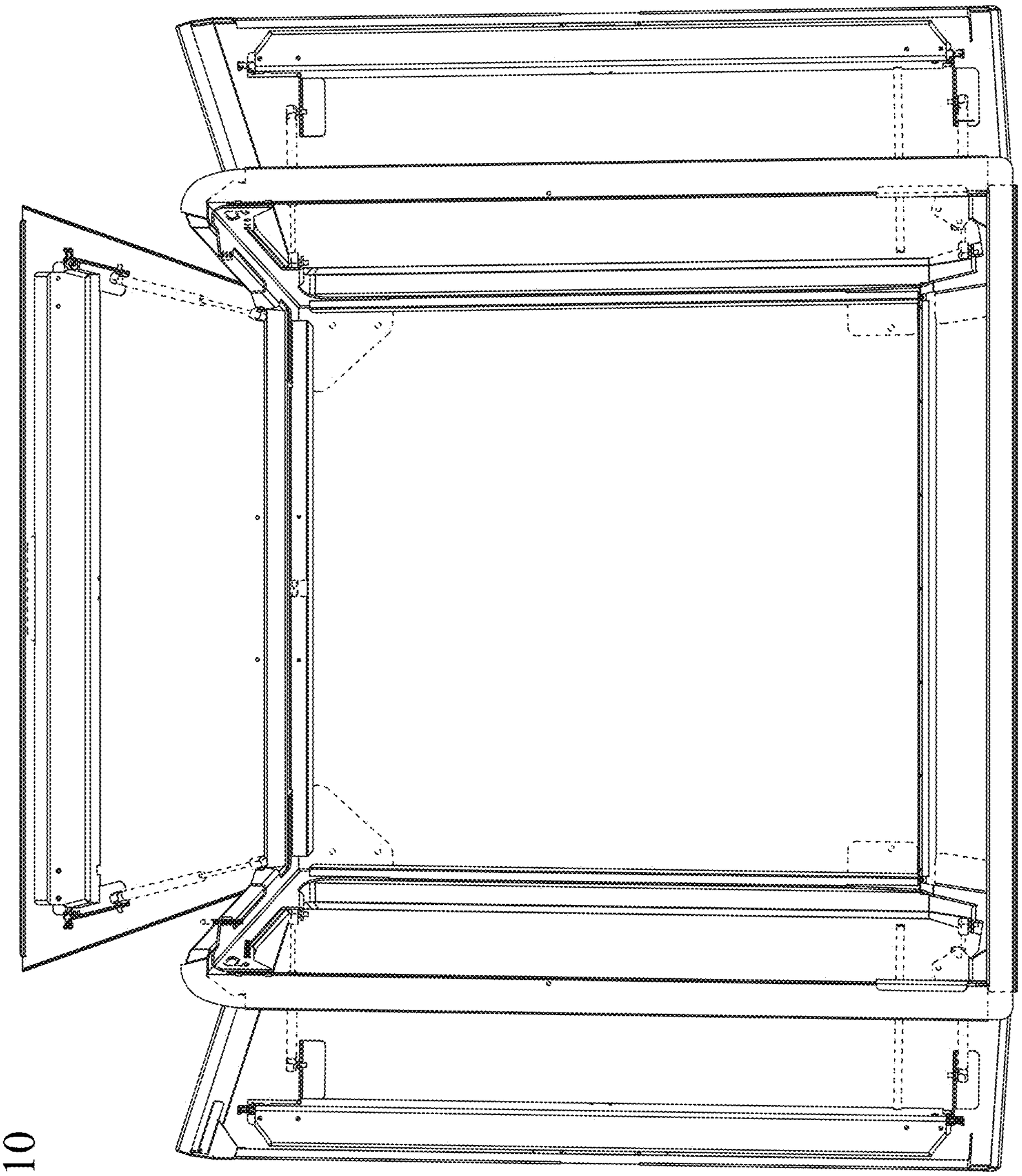

FIG. 10

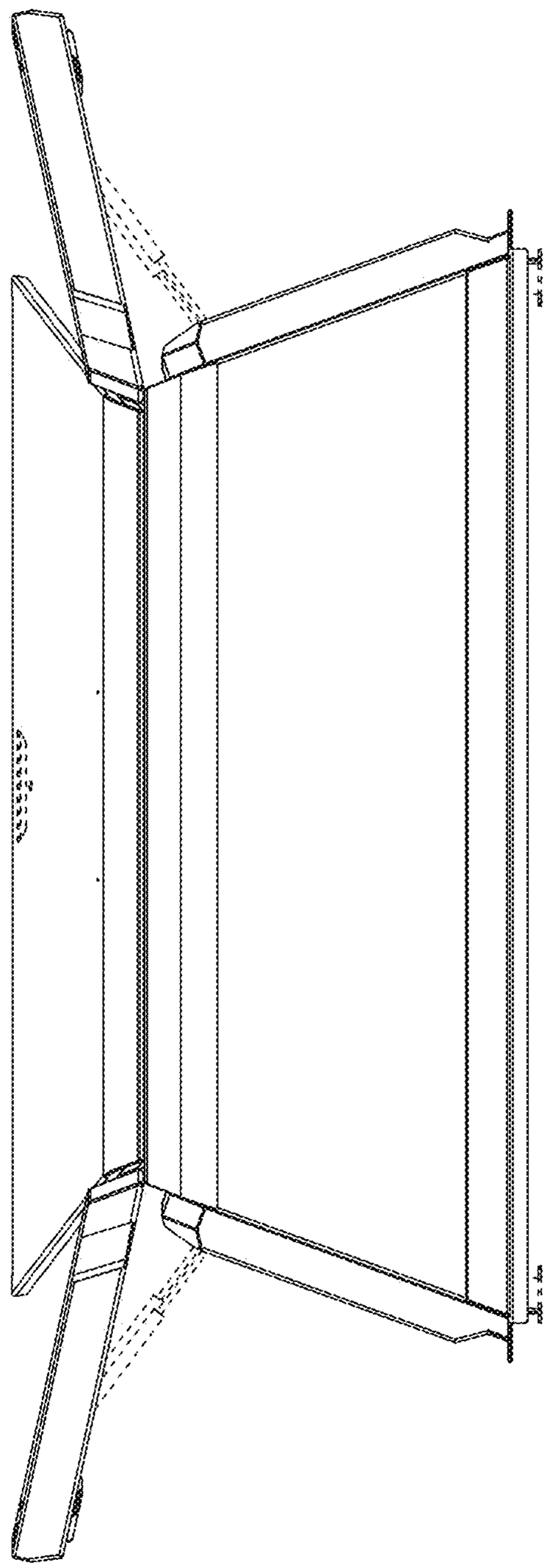

FIG. 11

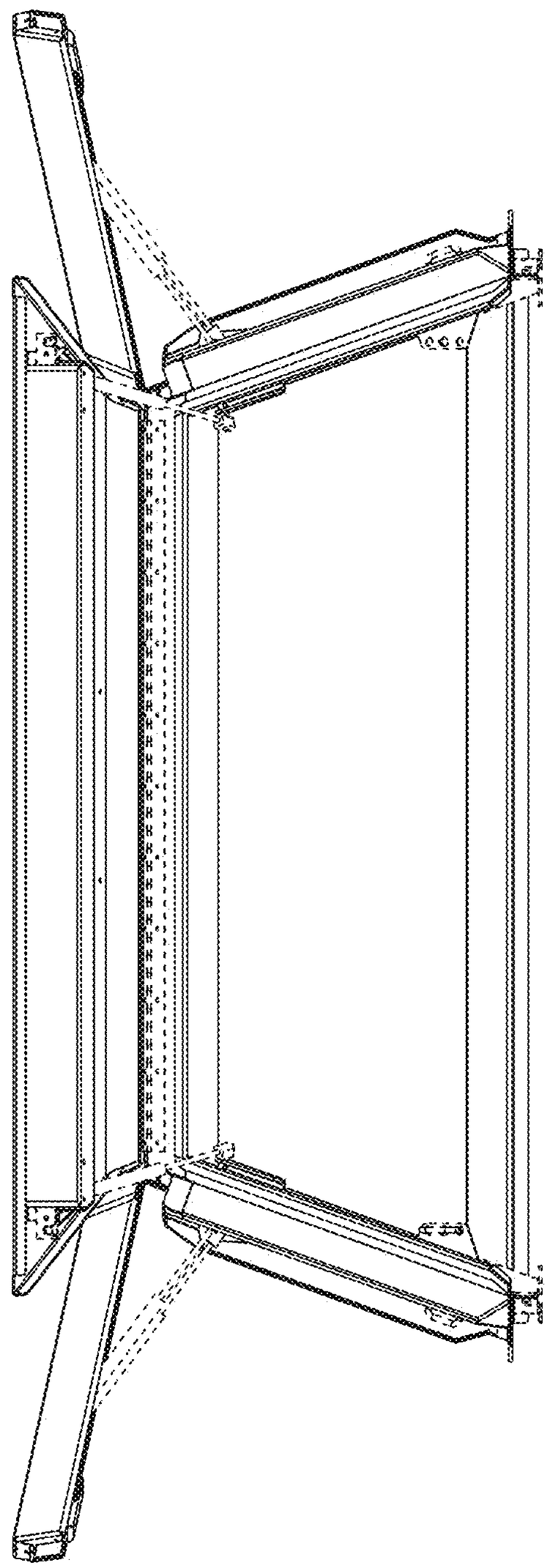

FIG. 12

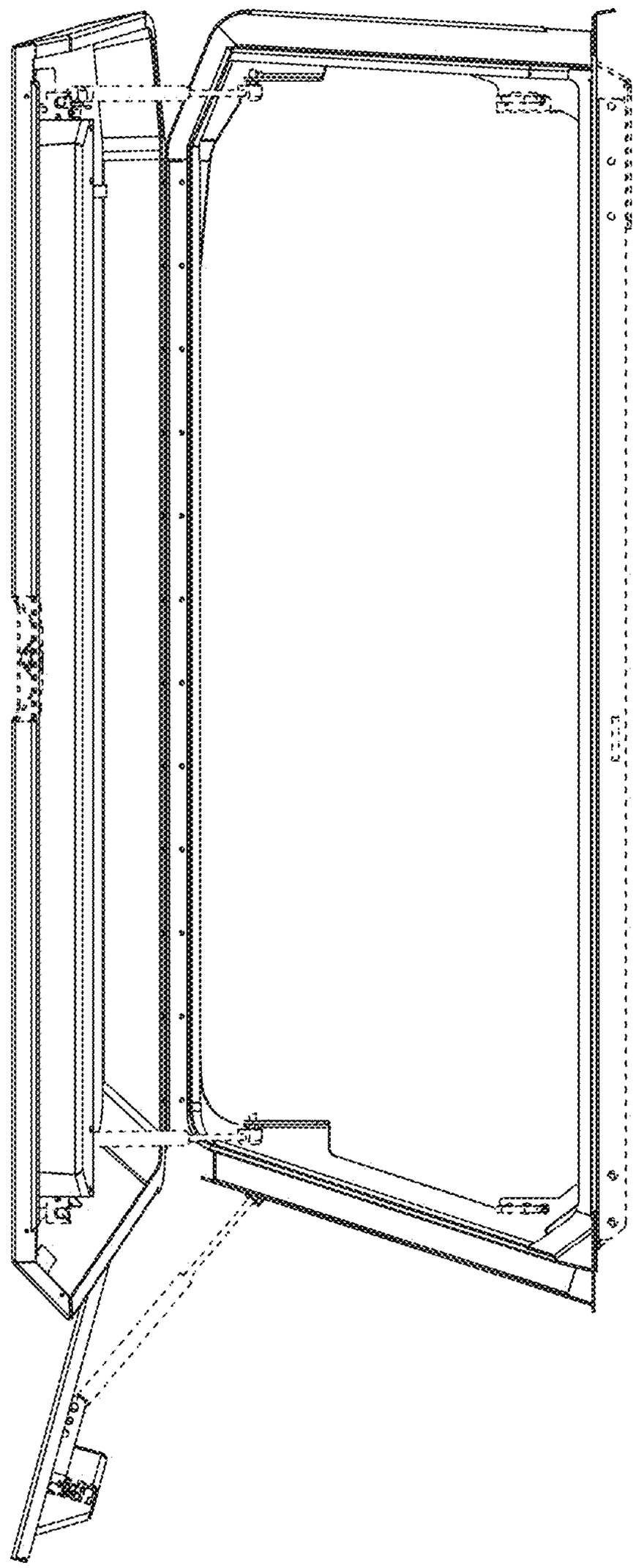

FIG. 13

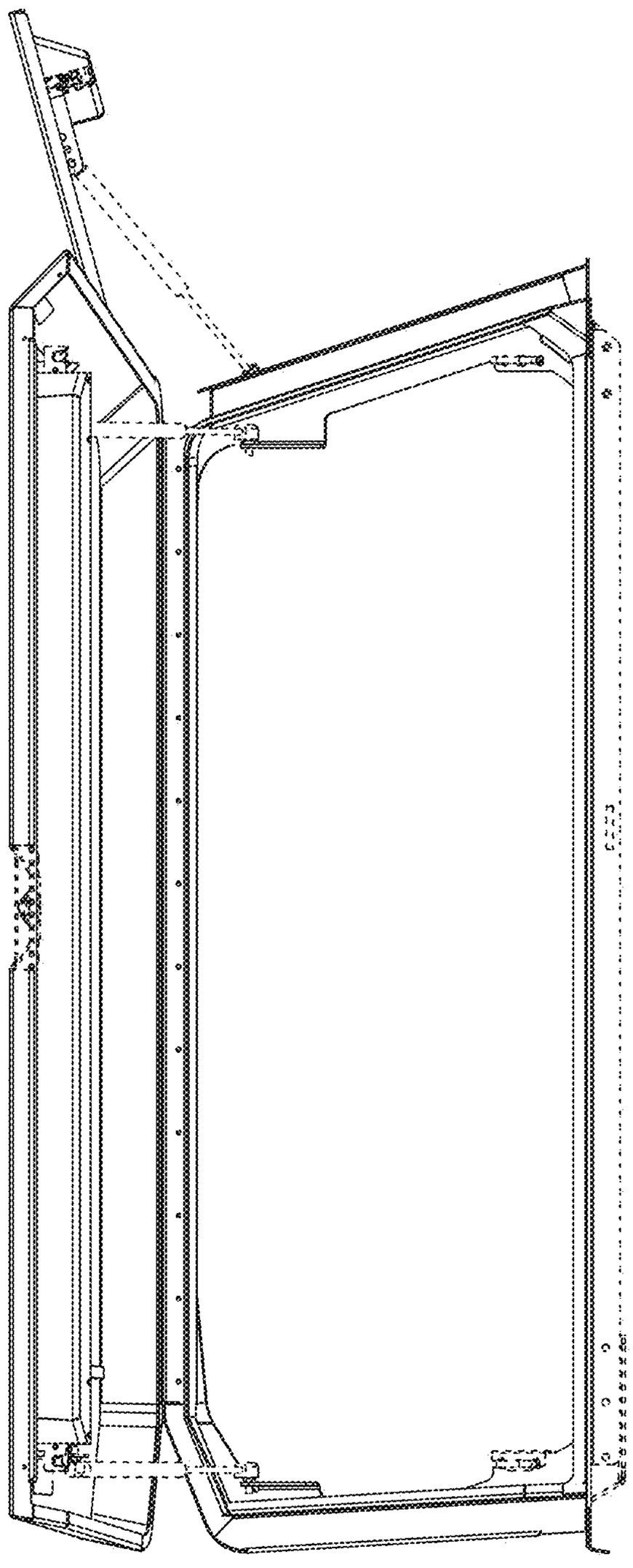

FIG. 14