US00D929648S

(12) United States Design Patent

Wang

(10) Patent No.: US D929,648 S
(45) Date of Patent: ** Aug. 31, 2021

(54) **ELECTRONIC CIGARETTE**

(71) Applicant: **SHENZHEN SMOORE TECHNOLOGY LIMITED**, Guangdong (CN)

(72) Inventor: **Jianliang Wang**, Guangdong (CN)

(73) Assignee: **SHENZHEN SMOORE TECHNOLOGY LIMITED**, Shenzhen (CN)

(**) Term: **15 Years**

(21) Appl. No.: **29/686,913**

(22) Filed: **Apr. 9, 2019**

(30) **Foreign Application Priority Data**

Nov. 21, 2018 (CN) 201830663236.2

(51) **LOC (13) Cl.** **27-02**

(52) **U.S. Cl.**
USPC **D27/162**

(58) **Field of Classification Search**
USPC ..... D27/100, 101, 139, 141, 148, 157, D27/161–171, 183, 185–194; D13/108, (Continued)

(56) **References Cited**

U.S. PATENT DOCUMENTS

D779,719 S * 2/2017 Qiu D27/101
D799,110 S * 10/2017 Qiu D27/101
(Continued)

FOREIGN PATENT DOCUMENTS

CN 304935886 * 12/2018

Primary Examiner — Dana K Weiland
Assistant Examiner — Mary Claire Ramirez

(74) *Attorney, Agent, or Firm* — Ladas & Parry LLP

(57) **CLAIM**

The ornamental design for an electronic cigarette, as shown and described.

DESCRIPTION

FIG. **1** is a front elevational view of a top component for an electronic cigarette showing the new design, the top component shown separately to show features otherwise not visible when combined;
FIG. **2** is a rear elevational view thereof;
FIG. **3** is a left side elevational view thereof;
FIG. **4** is a right side elevational view thereof;
FIG. **5** is a top plan view thereof;
FIG. **6** is a bottom plan view thereof;
FIG. **7** is a front, right, and top perspective view thereof;
FIG. **8** is a rear, left, and bottom perspective view thereof;
FIG. **9** is a front elevational view of a bottom component for the electronic cigarette, shown separately to show features otherwise not visible when combined;
FIG. **10** is a rear elevational view thereof;
FIG. **11** is a left side elevational view thereof;
FIG. **12** is a right side elevational view thereof;
FIG. **13** is a top plan view thereof;
FIG. **14** is a bottom plan view thereof;
FIG. **15** is a front, right, and top perspective view thereof;
FIG. **16** is a rear, left, and bottom perspective view thereof;
FIG. **17** is a front elevational view of the electronic cigarette;
FIG. **18** is a rear elevational view thereof;
FIG. **19** is a left side elevational view thereof;
FIG. **20** is a right side elevational view thereof;
FIG. **21** is a top plan view thereof;
FIG. **22** is a bottom plan view thereof;
FIG. **23** is a front, right, and top perspective view thereof; and,
FIG. **24** is a rear, left and bottom perspective view thereof.
The broken lines in the figures are included for the purpose of illustrating portions of the electronic cigarette that form no part of the claimed design.

1 Claim, 24 Drawing Sheets

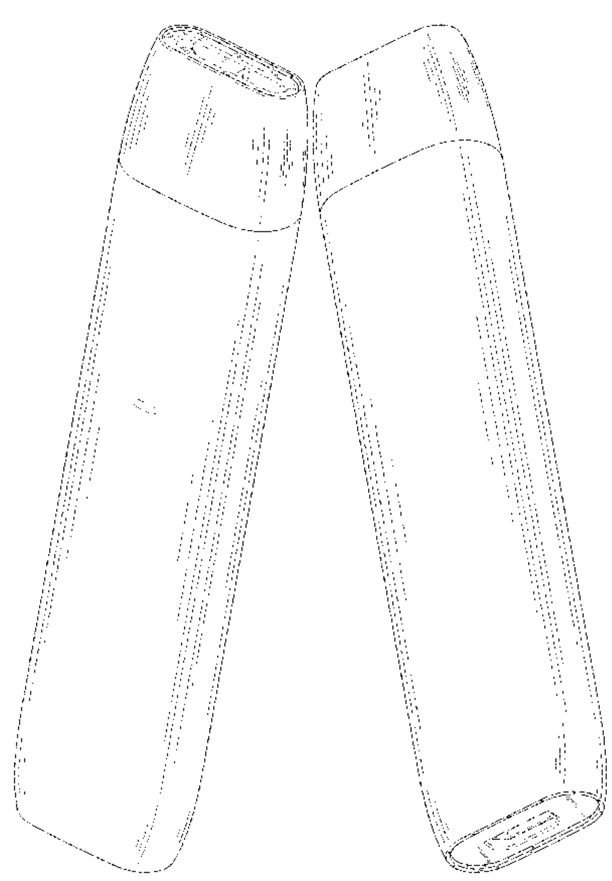

(58) **Field of Classification Search**
USPC D13/144, 103, 119, 146, 168, 218; D23/360, 364–366; D24/110, 110.5, 129, D24/113, 112; D19/925–929, 161–166, D19/173, 66, 115, 123, 177, 923, D19/194–196; D28/85, 4, 7, 88, 73–76; D3/201, 11, 13, 17, 273, 300, 202; D14/411, 434, 480.5, 480.1, 480.3, 483, D14/484.1, 137, 250, 251, 480.7, 203.1, D14/203.3, 203.7, 218, 254, 433–435, D14/435.1; D9/686, 529; D8/107; D10/119.1, 119.3, 119.2, 57; D17/13
CPC A24F 40/00; A24F 40/40; A24F 40/42; A24F 40/05; A24F 40/46; A24F 47/002; A24F 47/008; A24D 1/14; A24D 1/042; A24D 1/02; G06F 3/03545; A61M 15/06
See application file for complete search history.

(56) **References Cited**

U.S. PATENT DOCUMENTS

D818,636 S * 5/2018 Qiu D27/101
D819,807 S * 6/2018 Genstler D24/129
D829,980 S * 10/2018 Qiu D27/162
D832,500 S * 10/2018 Qiu D27/162
D849,996 S * 5/2019 Duque D27/194
D870,372 S * 12/2019 Zhu D27/167
D870,959 S * 12/2019 Leon Duque D27/162
D870,961 S * 12/2019 Levinson D27/162
D877,976 S * 3/2020 Ding D27/162
D887,632 S * 6/2020 Duque D27/167
D893,094 S * 8/2020 Wang D27/162
D900,385 S * 10/2020 Wang D27/162
D900,386 S * 10/2020 Wang D27/162
D902,473 S * 11/2020 Li D27/101
10,842,189 B1 * 11/2020 Hermiz A24F 40/42
D919,881 S * 5/2021 Carlberg D27/162
2018/0037381 A1 * 2/2018 White B65D 81/02
2018/0279682 A1 * 10/2018 Guo A24F 40/46
2019/0029319 A1 * 1/2019 Moorman A24F 7/04
2019/0174826 A1 * 6/2019 Zhu A24F 40/485
2019/0208825 A1 * 7/2019 Qiu A24F 40/50
2019/0373679 A1 * 12/2019 Fu A24F 7/00
2019/0380388 A1 * 12/2019 Amorde A24F 40/53
2020/0022413 A1 * 1/2020 Zhang A24F 40/485
2020/0146361 A1 * 5/2020 Silver G16H 40/67
2020/0178616 A1 * 6/2020 Yu A61M 15/0083

* cited by examiner

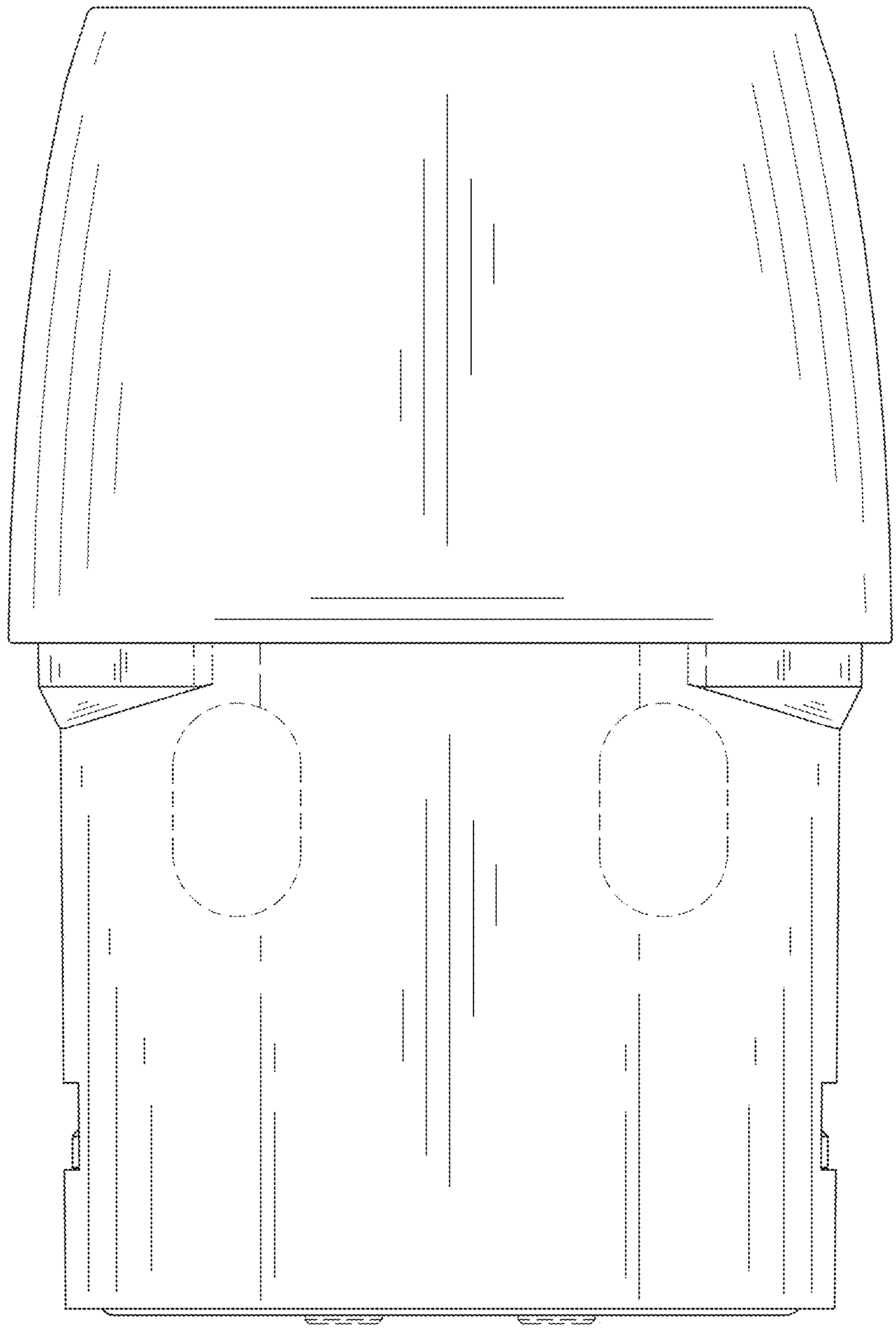

FIG. 1

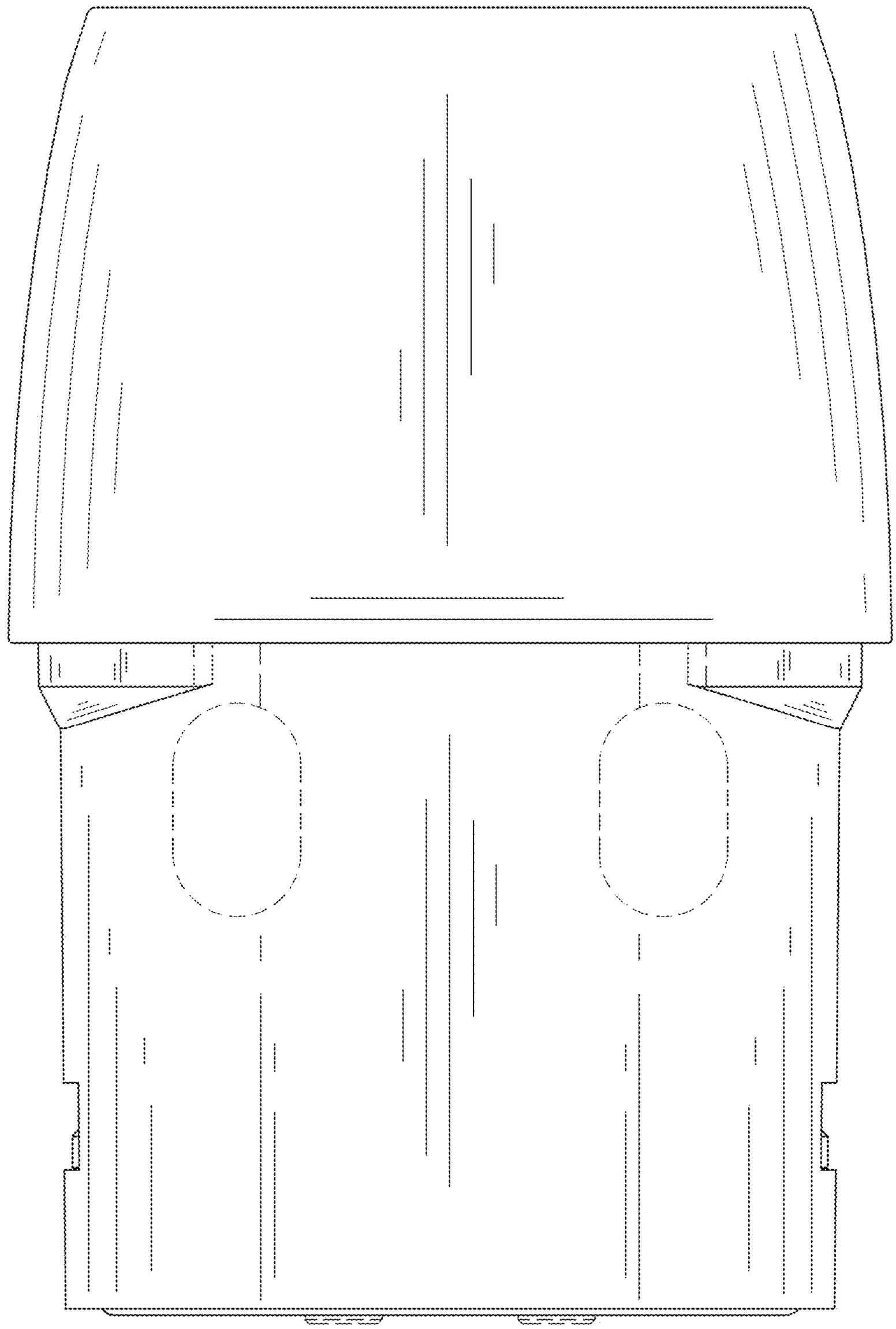

FIG. 2

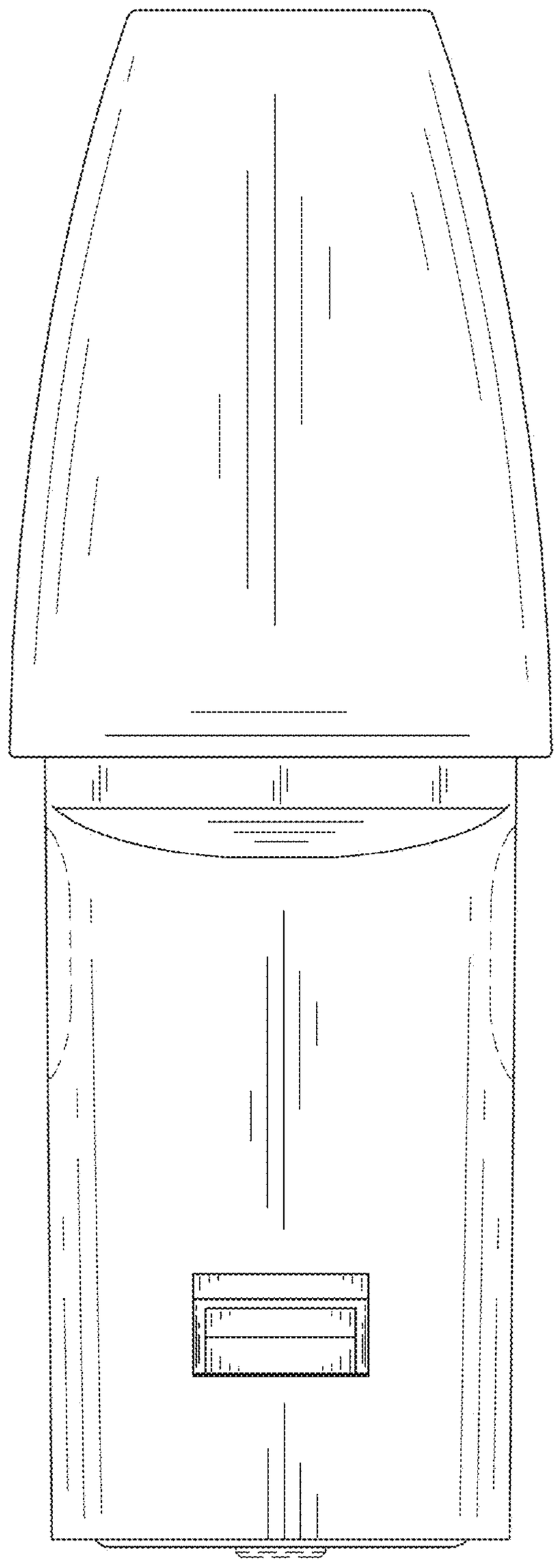

FIG. 3

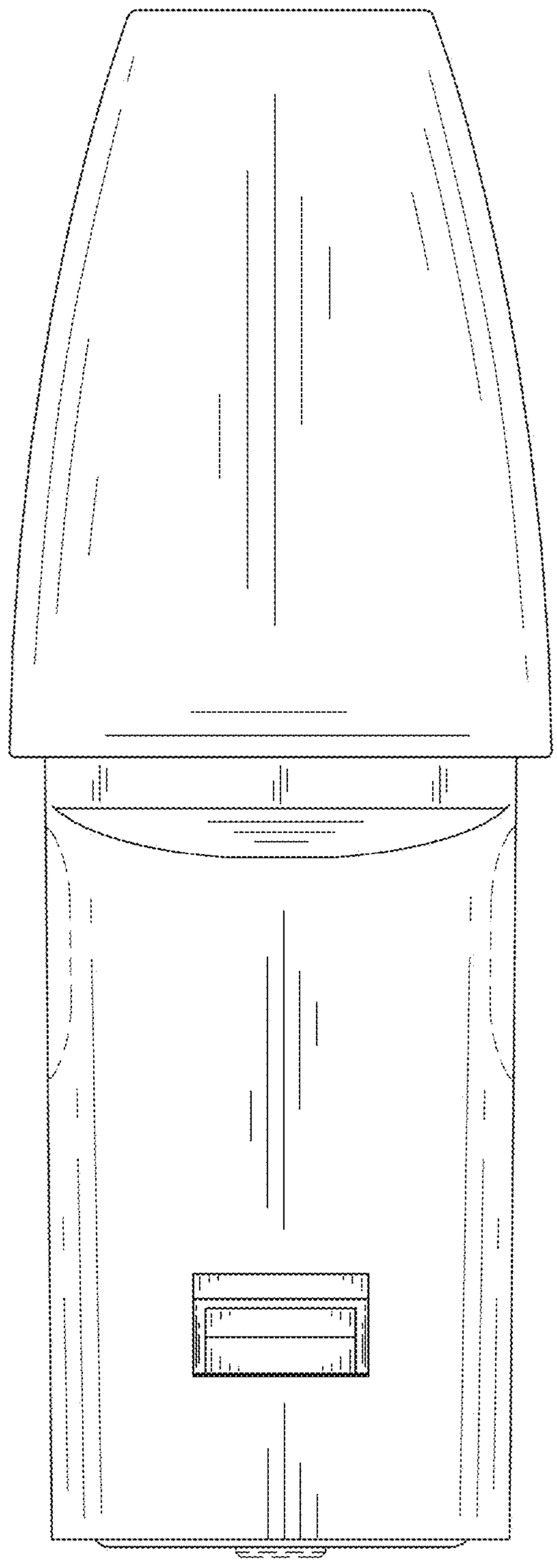

FIG. 4

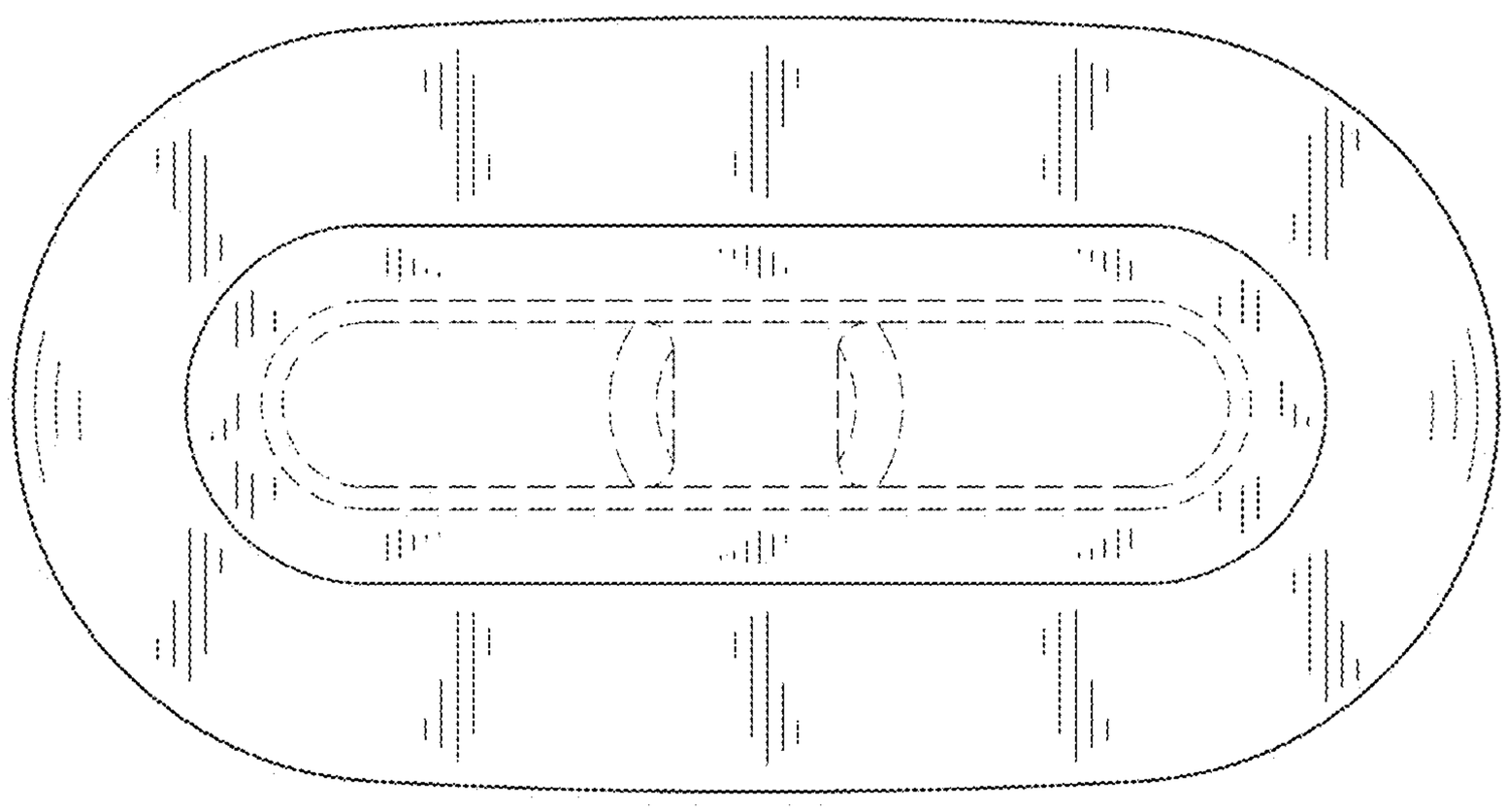

FIG. 5

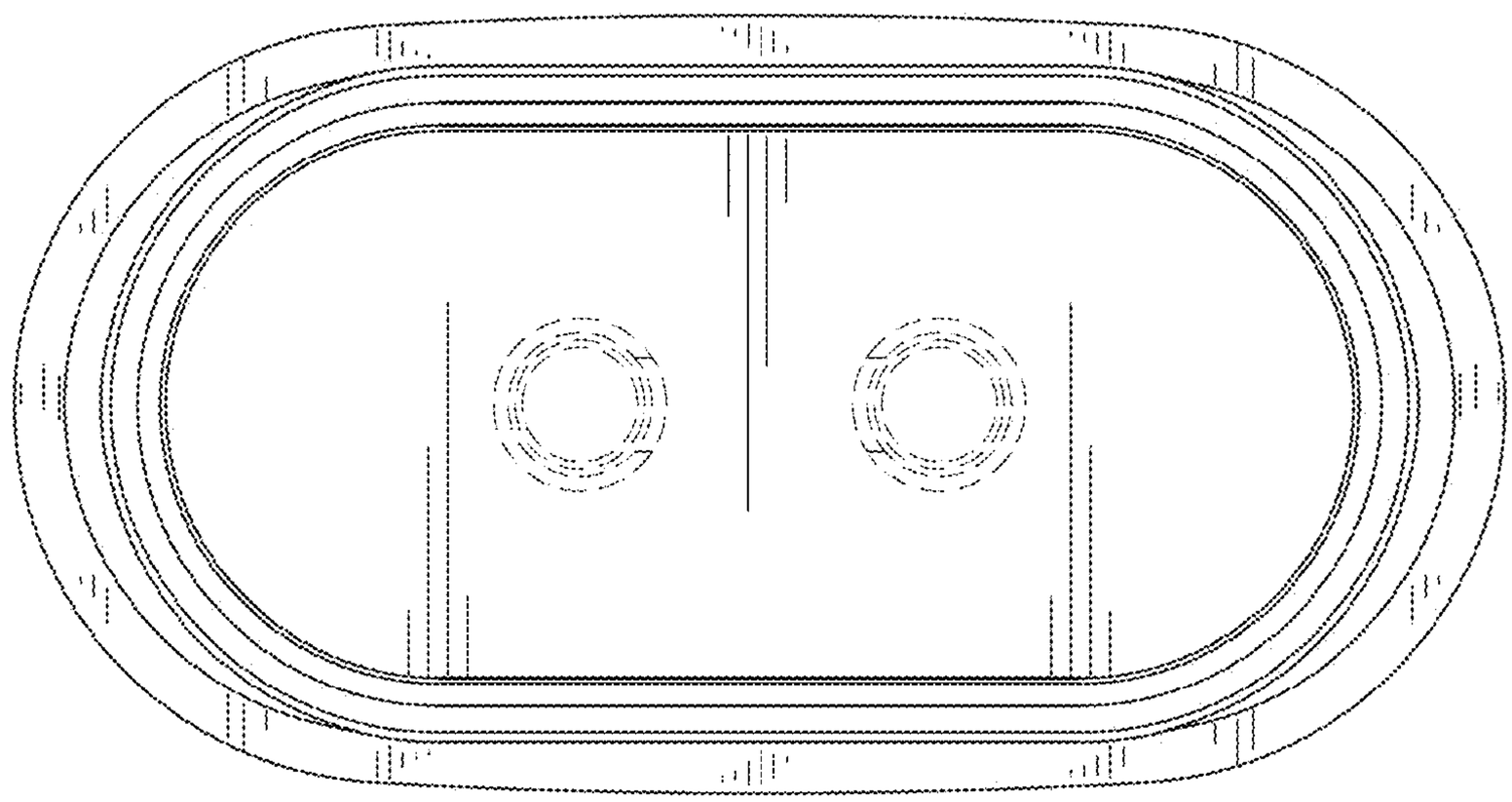

FIG. 6

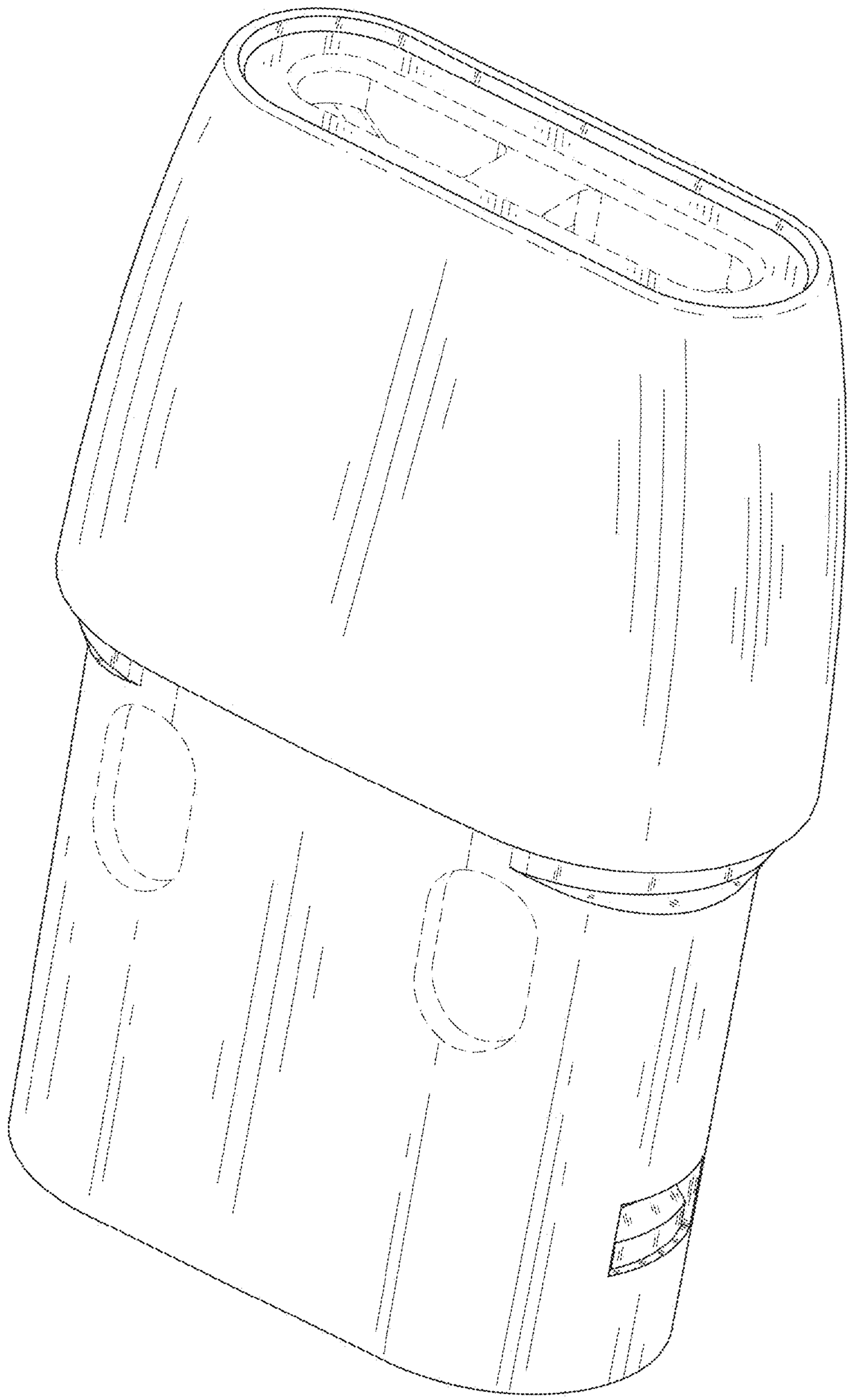

FIG. 7

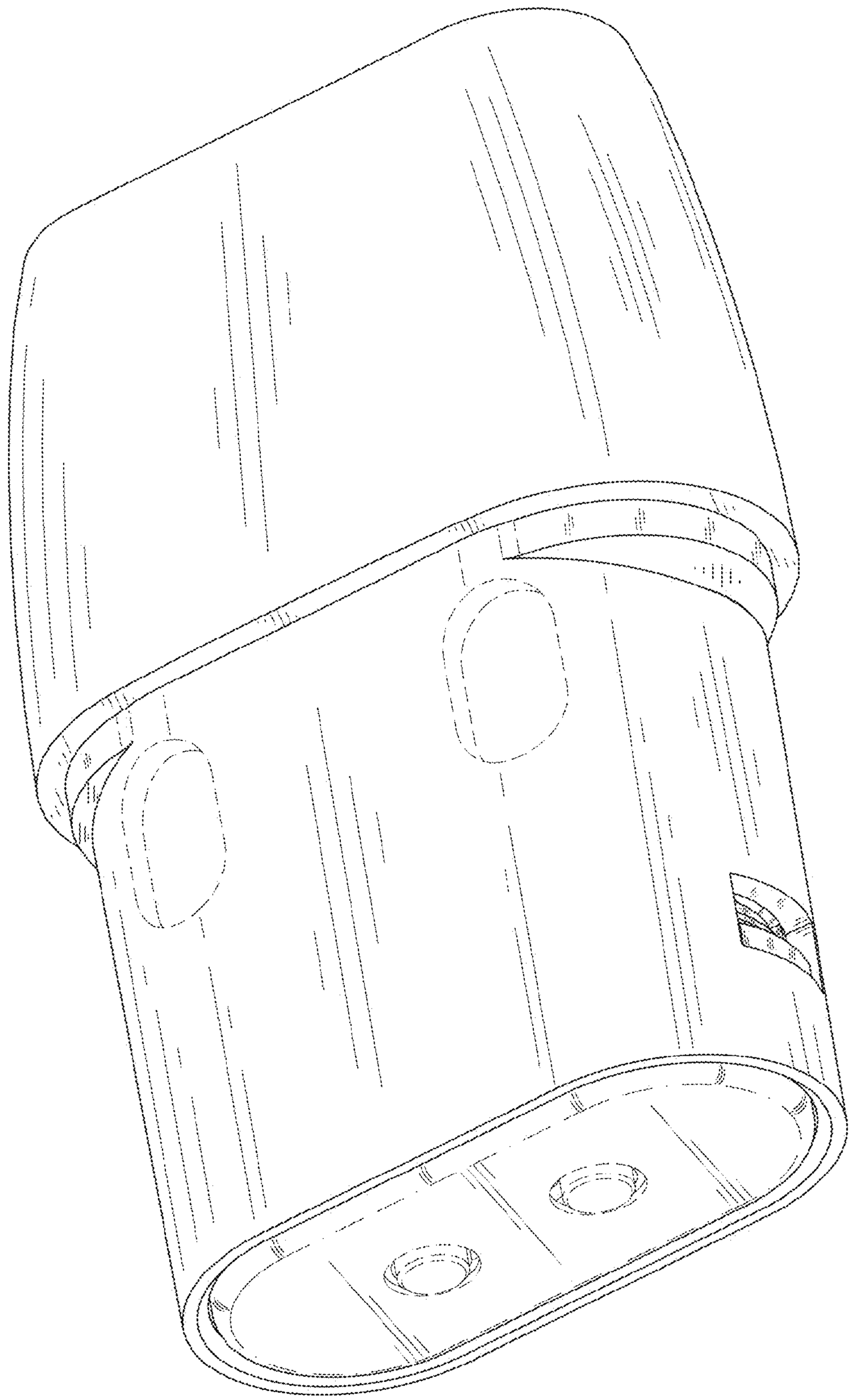

FIG. 8

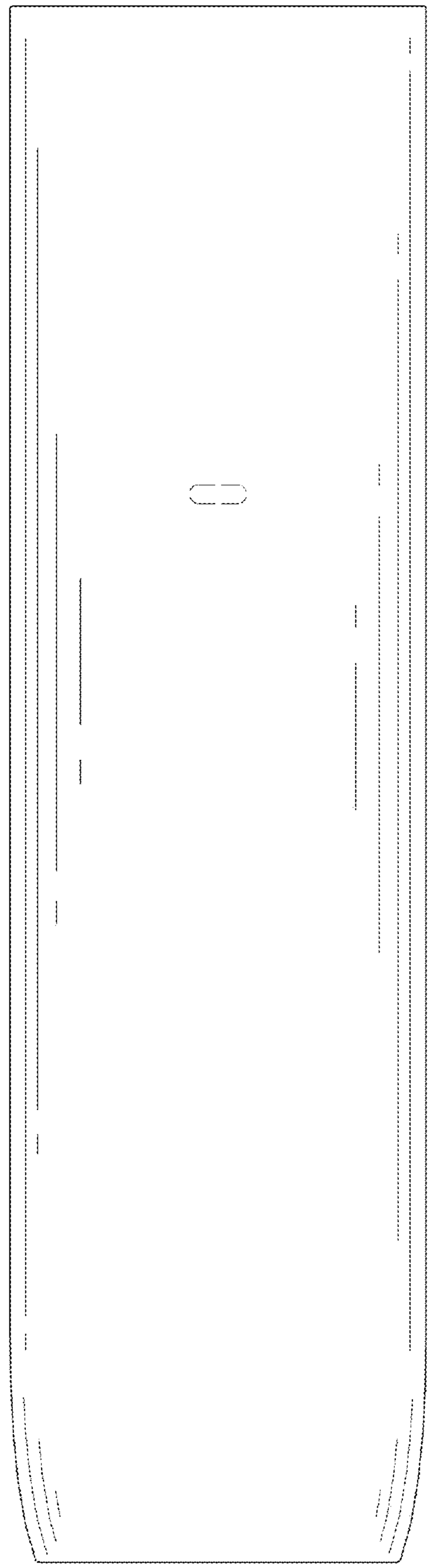

FIG. 9

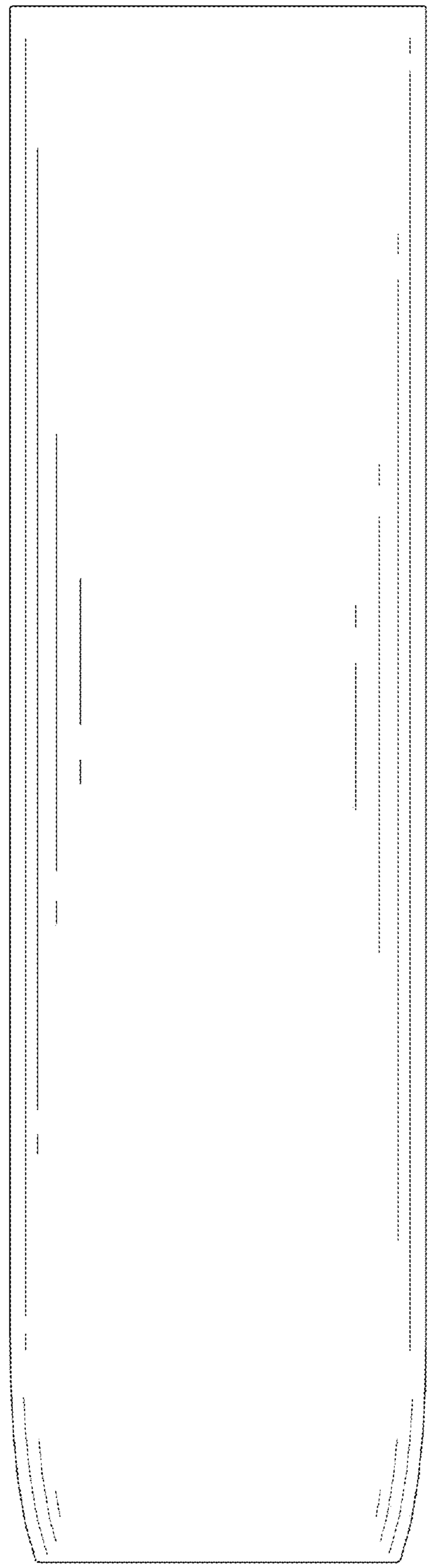

FIG. 10

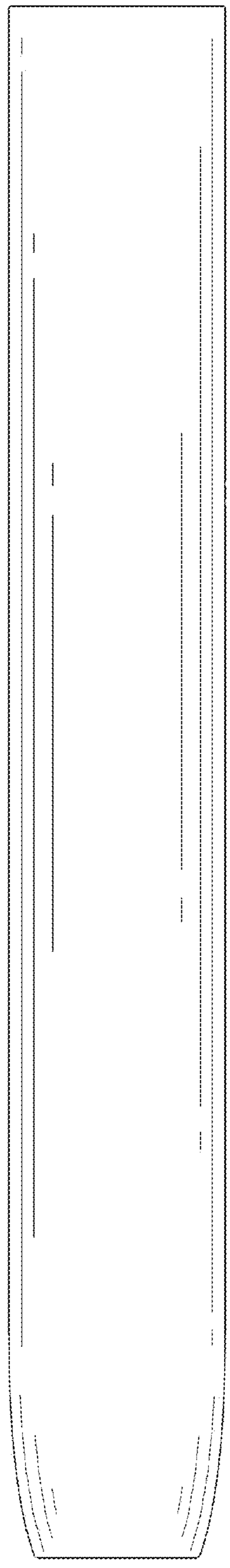

FIG. 11

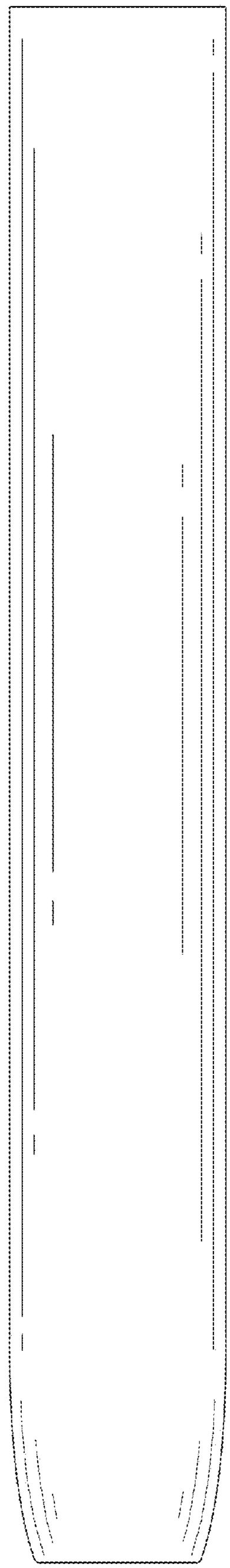

FIG. 12

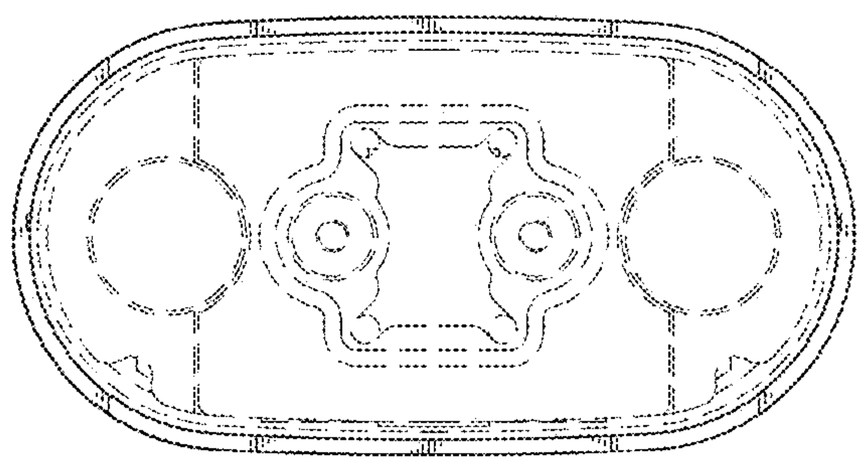

FIG. 13

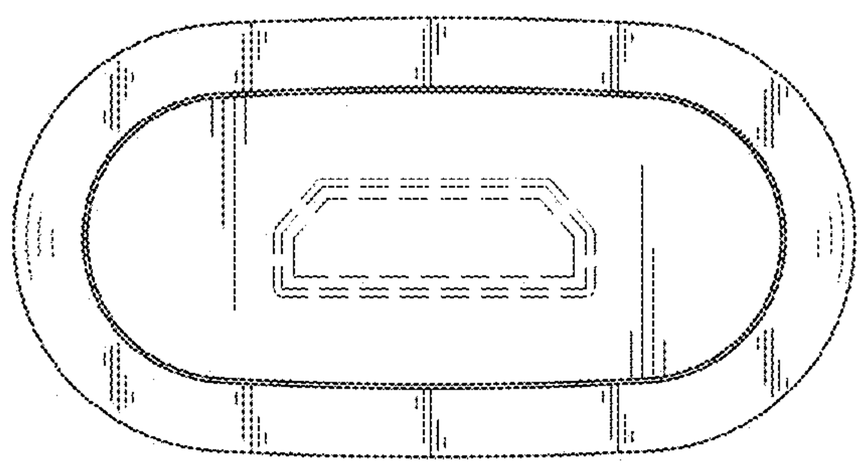

FIG. 14

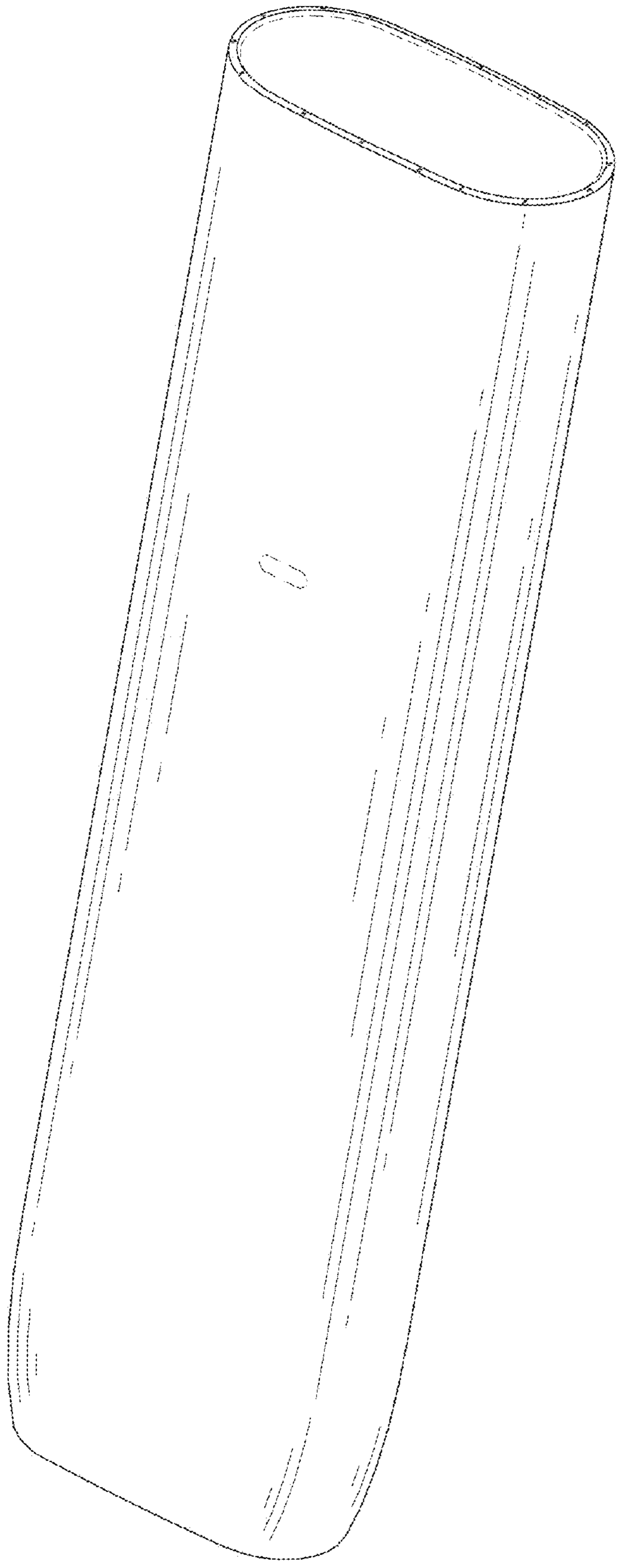

FIG. 15

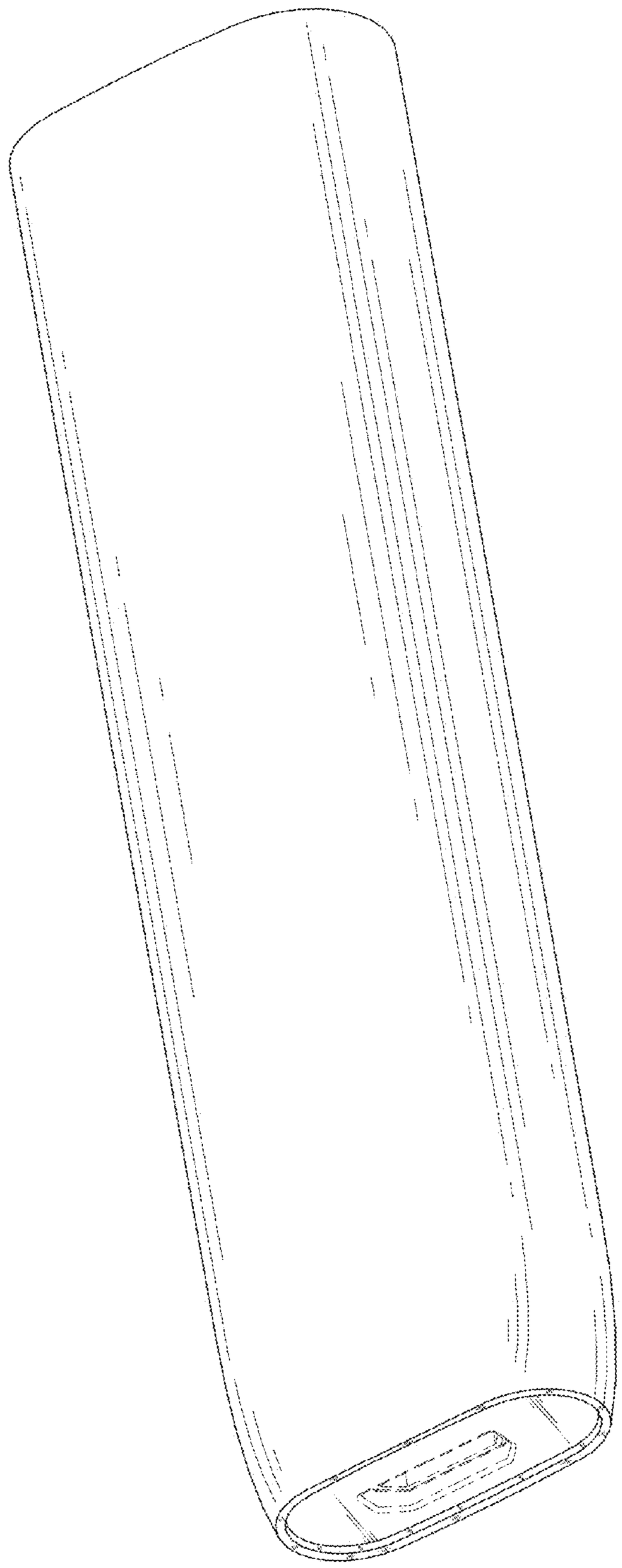

FIG. 16

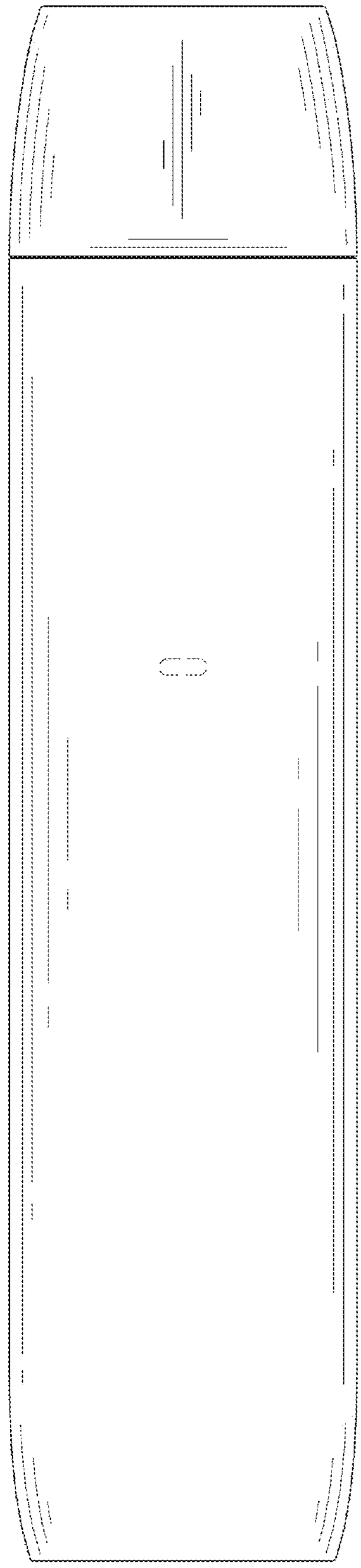

FIG. 17

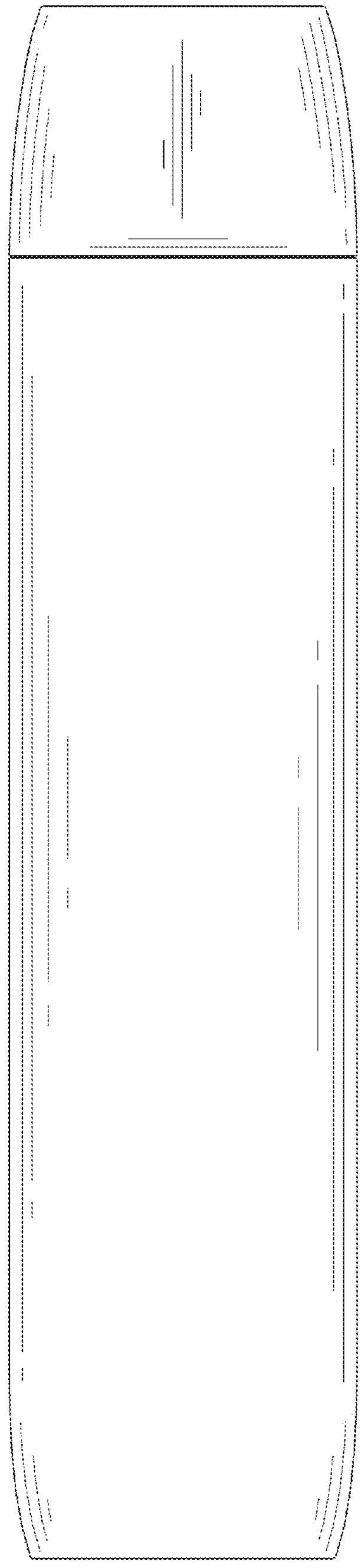

FIG. 18

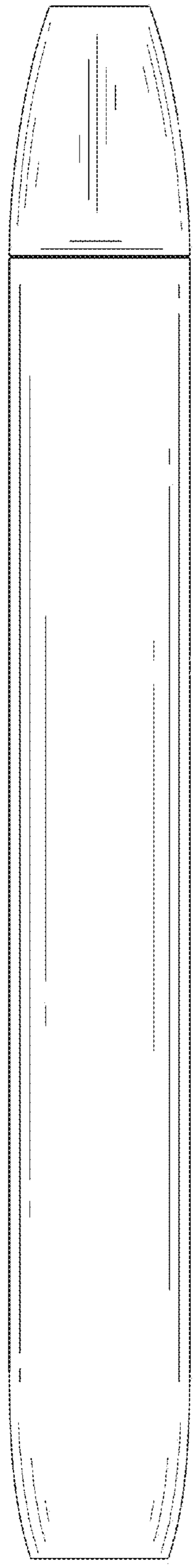

FIG. 19

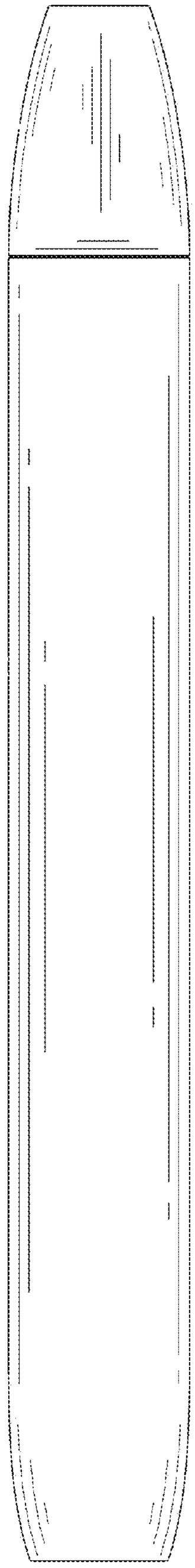

FIG. 20

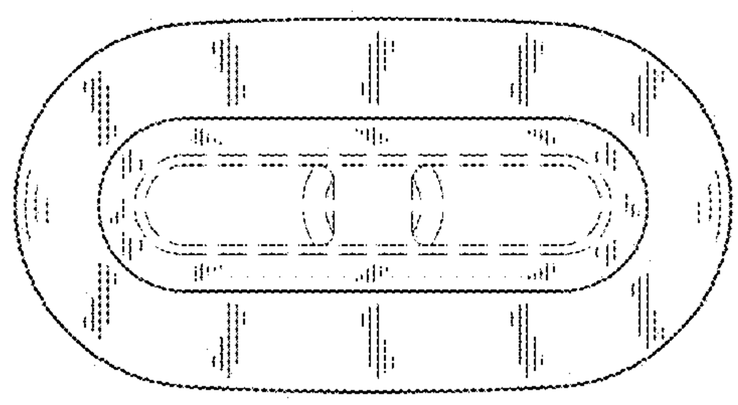

FIG. 21

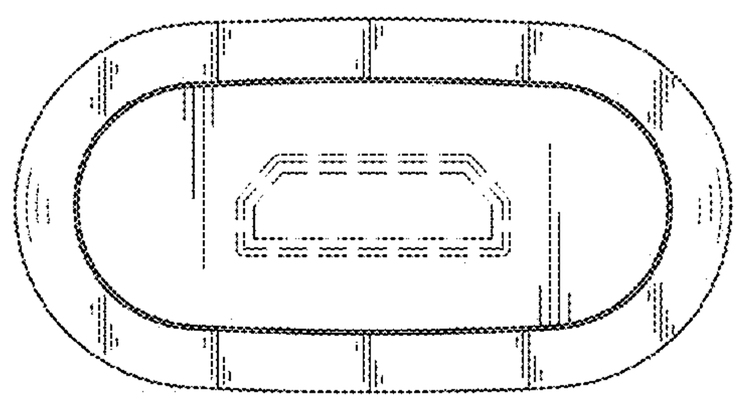

FIG. 22

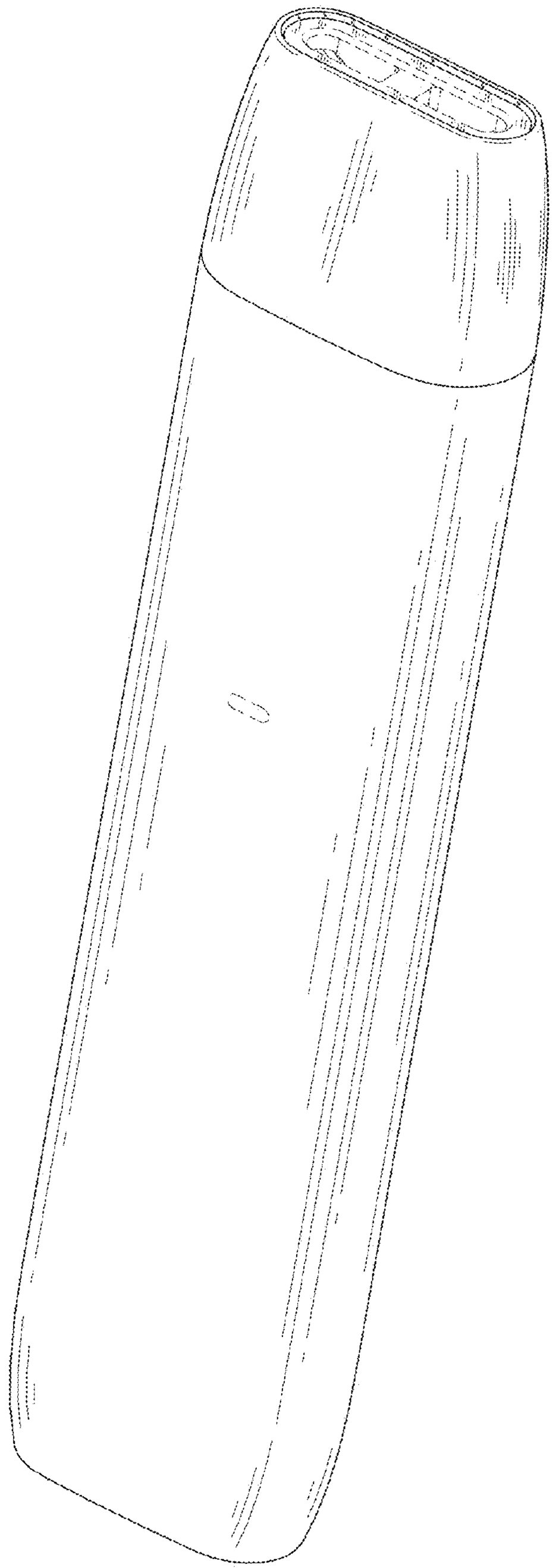

FIG. 23

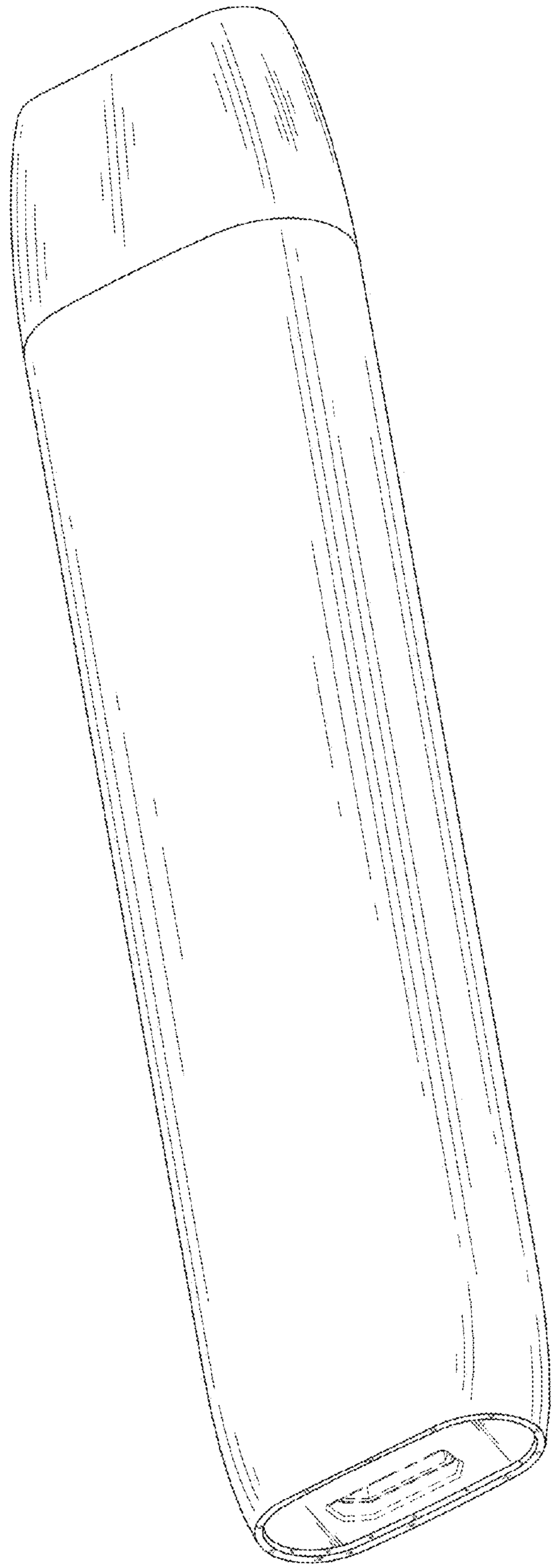

FIG. 24