US00D928086S

(12) United States Design Patent

Mu et al.

(10) **Patent No.: US D928,086 S**

(45) **Date of Patent: ** Aug. 17, 2021**

(54) **INVERTER**

(71) Applicant: **Siemens Aktiengesellschaft**, Munich (DE)

(72) Inventors: **Rong Liang Mu**, Nanjing (CN); **Hai Jun Wang**, Nanjing (CN); **Guan Yong Yu**, Nanjing (CN)

(73) Assignee: **Siemens Aktiengesellschaft**, Munich (DE)

(**) Term: **15 Years**

(21) Appl. No.: **29/696,932**

(22) Filed: **Jul. 2, 2019**

(30) **Foreign Application Priority Data**

Jan. 3, 2019 (CN) 201930002255.5

(51) **LOC (13) Cl.** **13-02**

(52) **U.S. Cl.**
USPC **D13/110**

(58) **Field of Classification Search**
USPC D13/110, 107, 112, 118, 146, 152, 153, D13/154, 173, 175, 178, 199, 184, D13/123–132, 54
CPC H01R 13/641; H01M 2/1022; H01M 2/1027; H01M 2/1072; H01M 2/105; H01M 2/1077; H02B 1/20
See application file for complete search history.

(56) **References Cited**

U.S. PATENT DOCUMENTS

D396,210	S	*	7/1998	Shiga	D13/110
D482,008	S	*	11/2003	Petronio	D13/184
D555,091	S	*	11/2007	Kawase	D13/133
D570,778	S	*	6/2008	Yu	D13/123
D592,138	S	*	5/2009	Mahaffey	D13/110
D631,436	S	*	1/2011	Huang	D13/110
8,879,918	B1	*	11/2014	Wang	G02B 6/36 398/135
D729,731	S	*	5/2015	Dasbach	D13/110
D739,352	S	*	9/2015	Benn	D13/123
D754,603	S	*	4/2016	Takano	D13/123
D793,955	S	*	8/2017	Yang	D13/107
D872,023	S	*	1/2020	Huang	D13/124

FOREIGN PATENT DOCUMENTS

CN	305774274	*	5/2020	
WO	WO-2017111947 A1	*	6/2017	G02B 6/4292
WO	WO-2017152395 A1	*	9/2017	G02B 6/445

OTHER PUBLICATIONS

Amazon. Link: https://www.amazon.com/dp/B08GHVYVQ6/ref=cm_sw_em_r_mt_dp_A7qsFb33ZRJAG. Visited Aug. 28, 2020. GUOYULIN Power Inverter. (Year: 2020).*

* cited by examiner

Primary Examiner — Lauren D McVey

(74) *Attorney, Agent, or Firm* — Henry M. Feiereisen LLC

(57) **CLAIM**

The ornamental design for an inverter, as shown and described.

DESCRIPTION

FIG. **1** is a front, bottom and right side perspective view of an inverter, showing our new design;
FIG. **2** is a rear, bottom and right side perspective view thereof;
FIG. **3** is a front view thereof;
FIG. **4** is a rear view thereof;
FIG. **5** is a left side view thereof;
FIG. **6** is a right side view thereof;
FIG. **7** is a top view thereof; and,
FIG. **8** is a bottom view thereof.
The broken line portion of the figure drawings represents structures forming no part of the claimed design.
The wire frame lines shown throughout the views indicate surface contour.

1 Claim, 8 Drawing Sheets

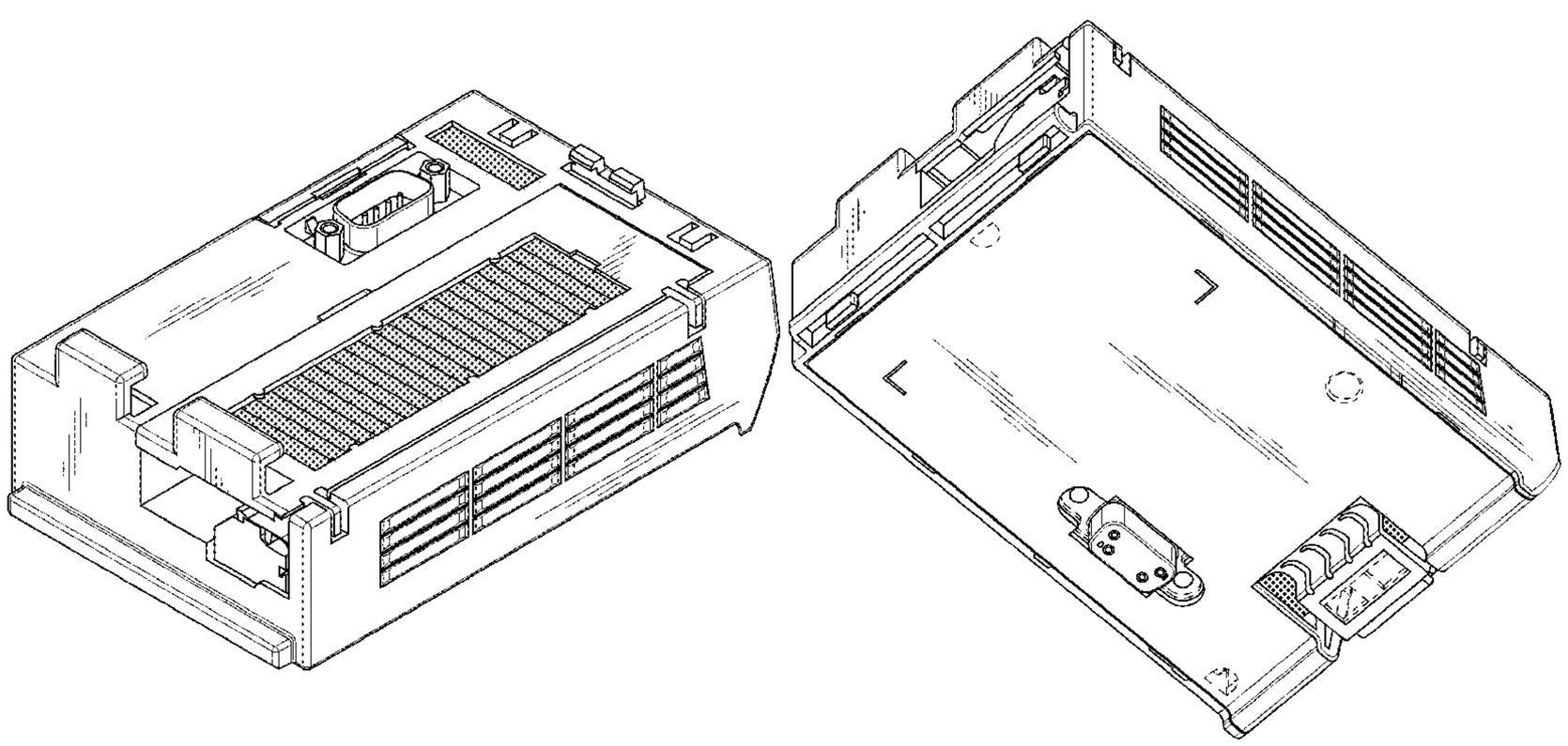

FIG. 1

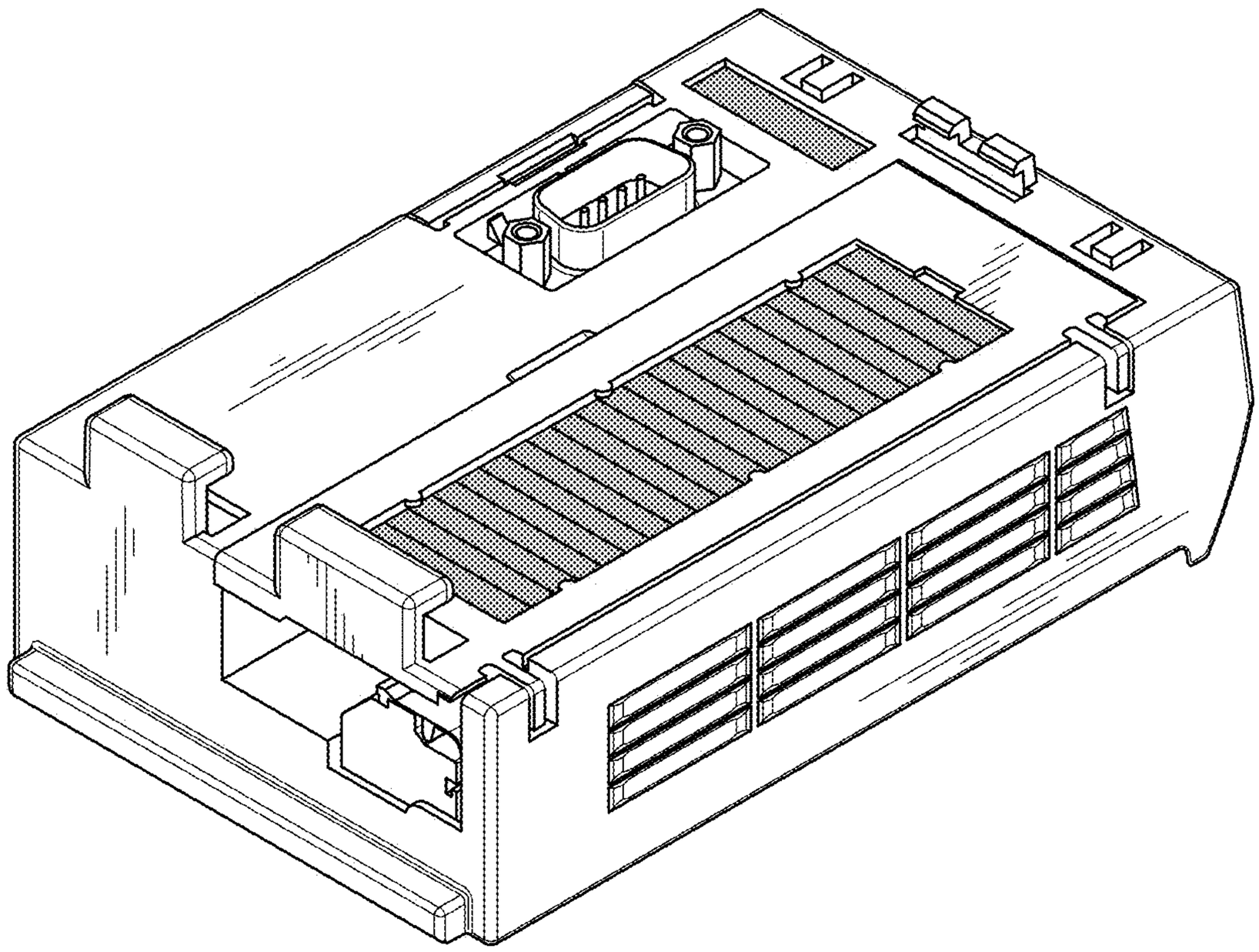

FIG. 2

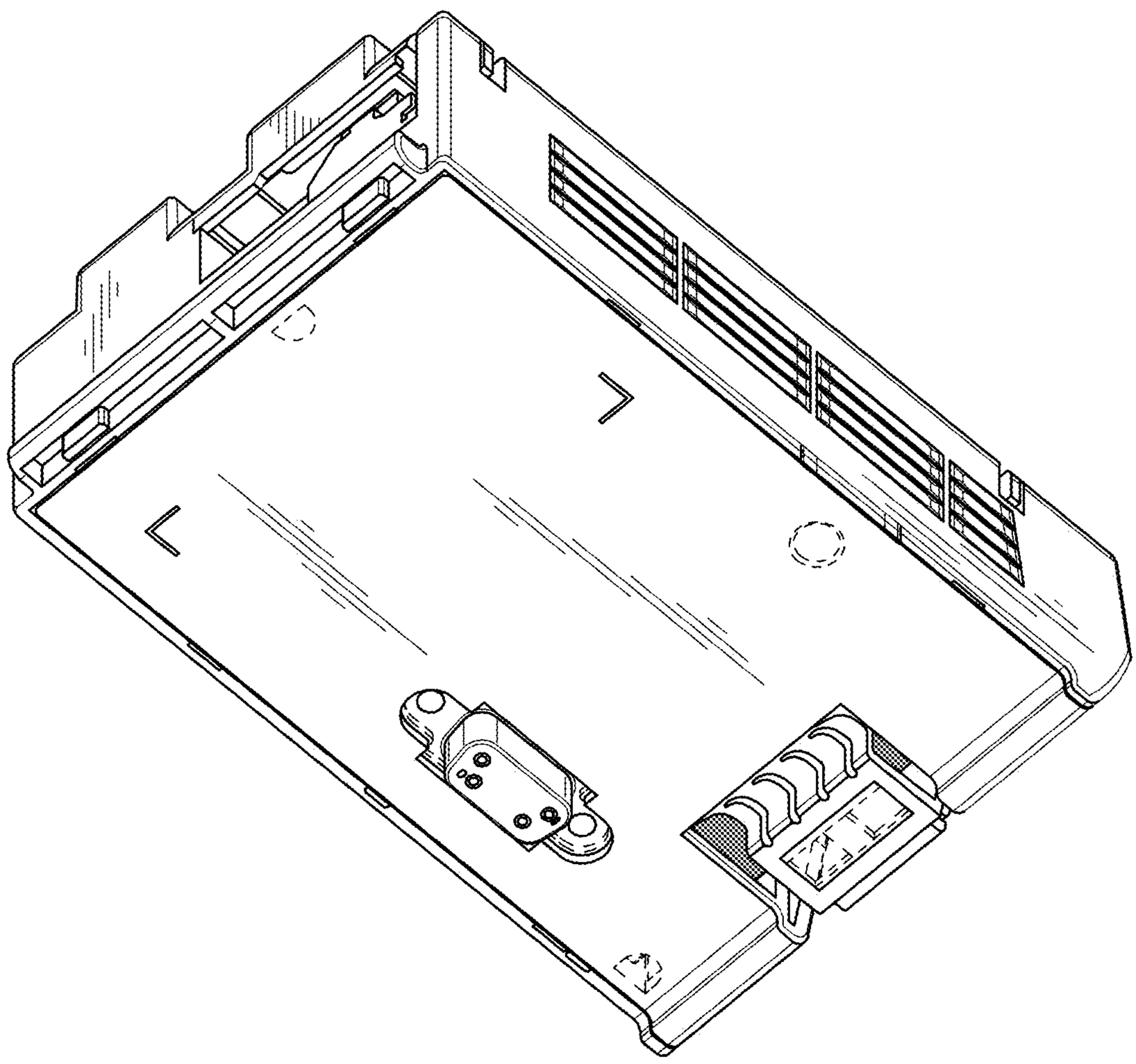

FIG. 3

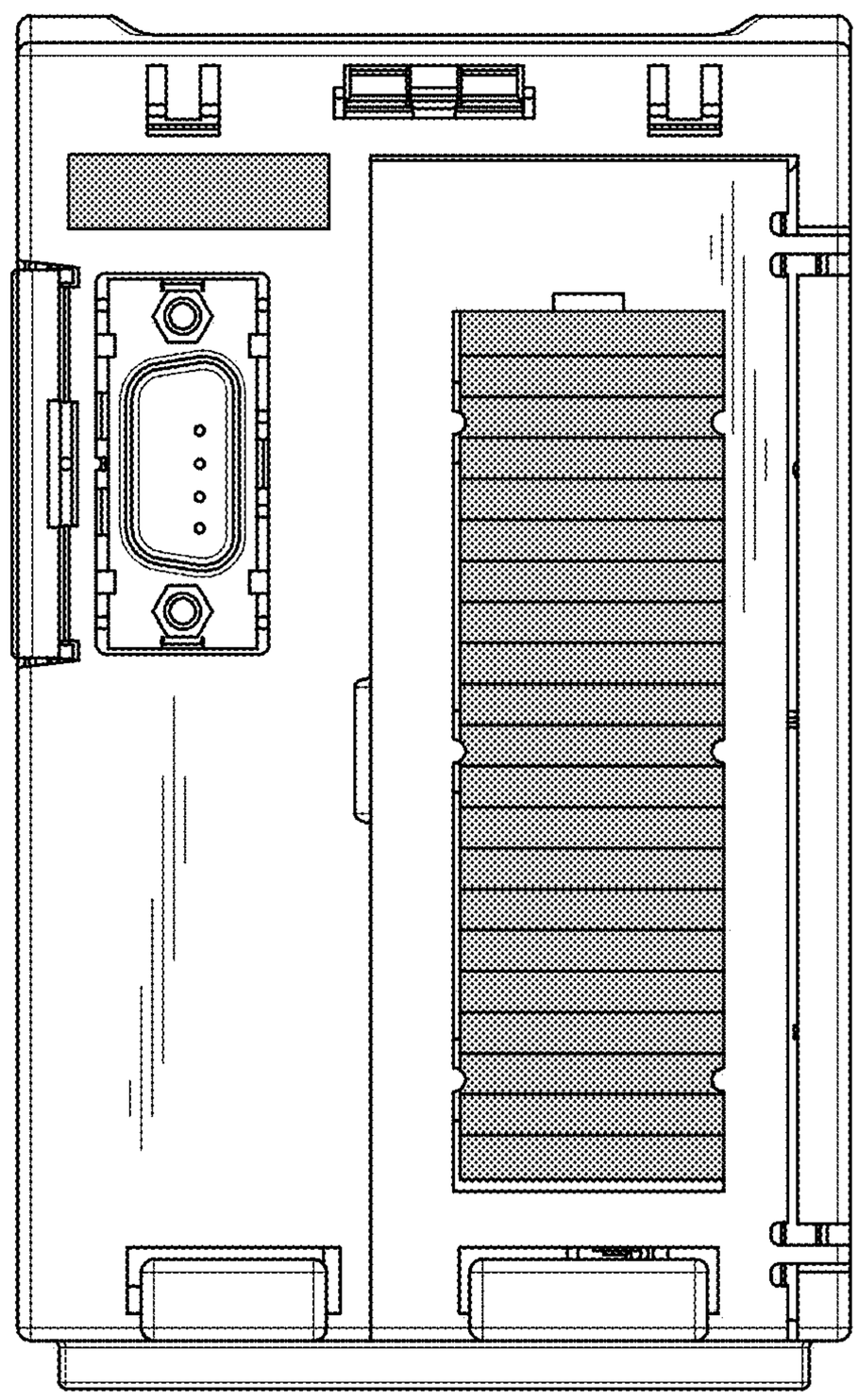

FIG. 4

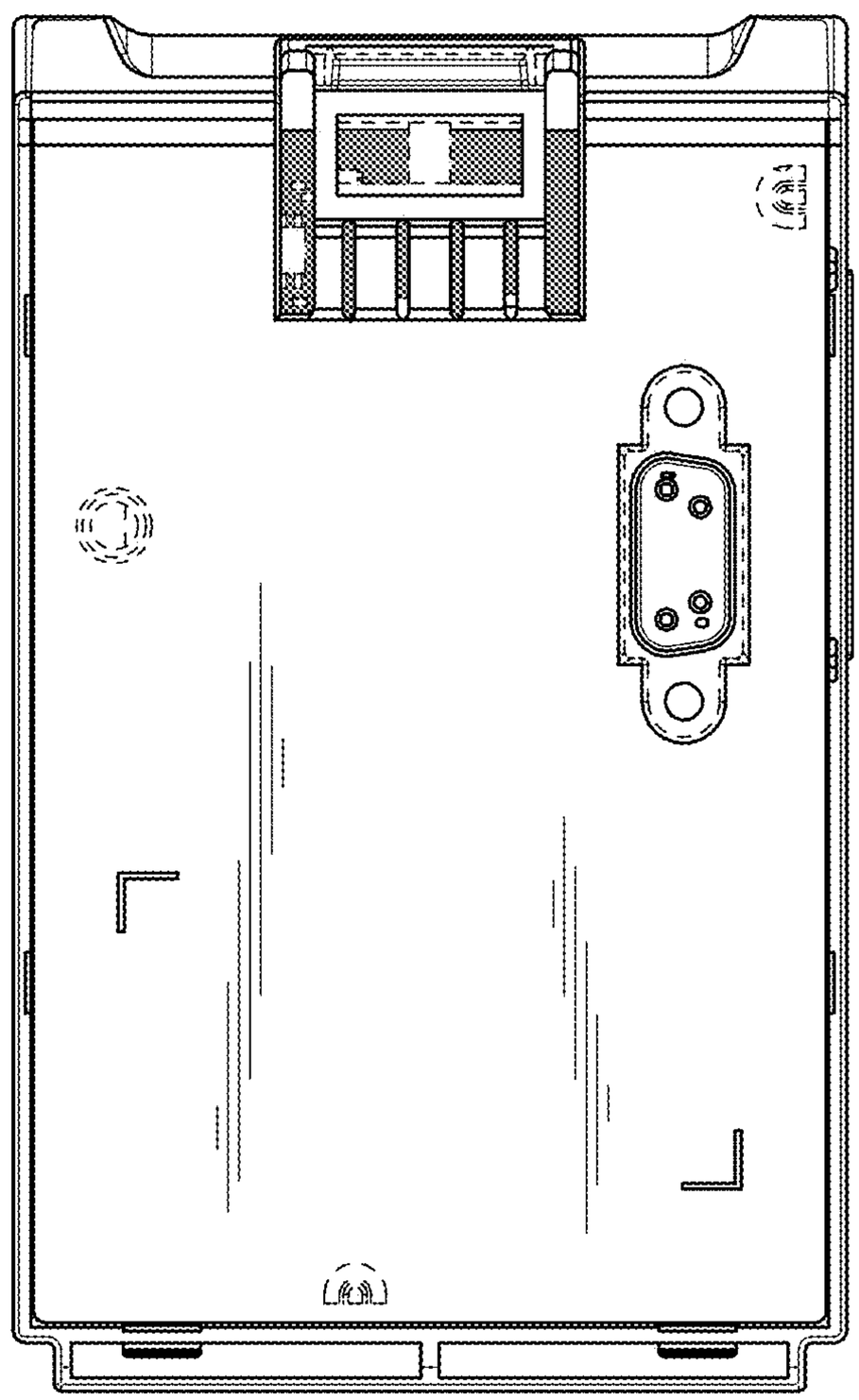

FIG. 5

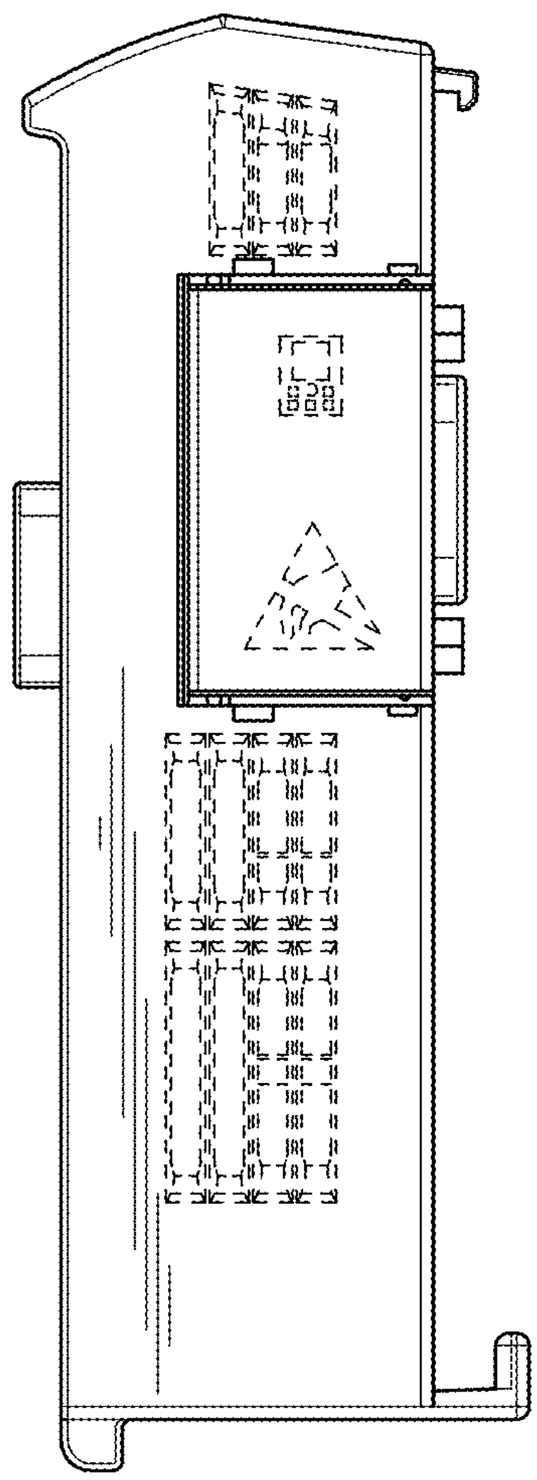

FIG. 6

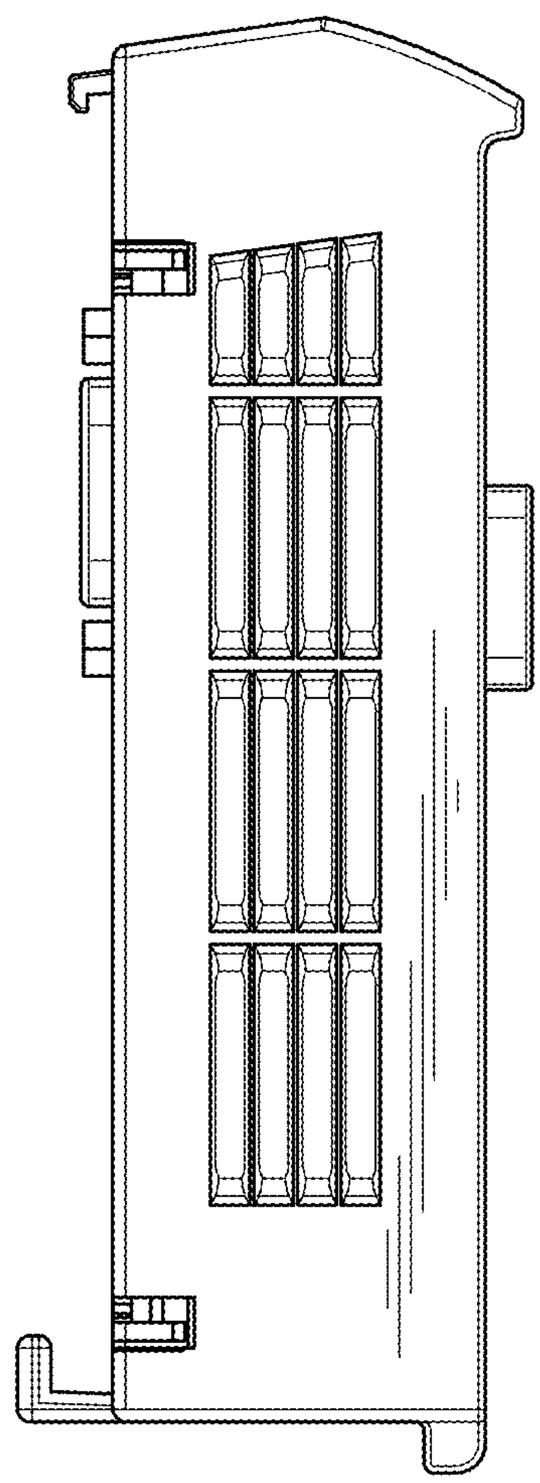

FIG. 7

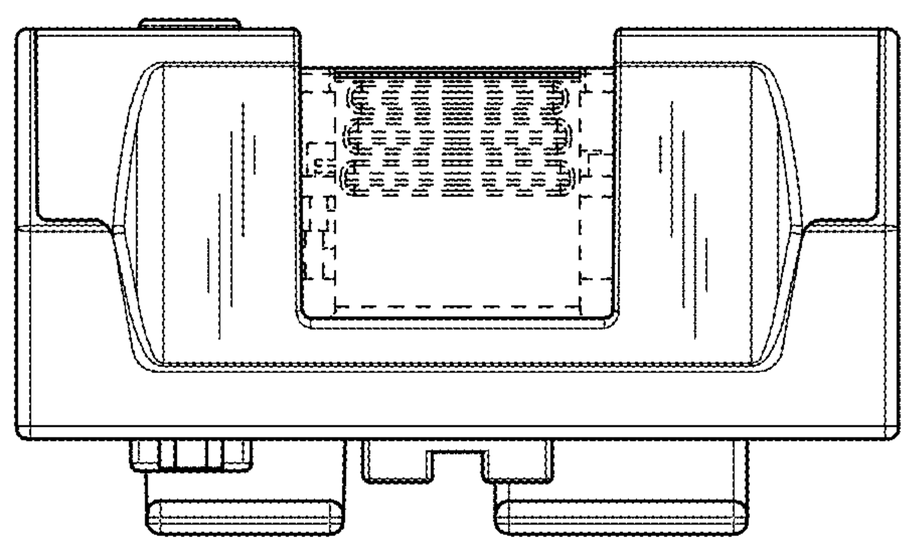
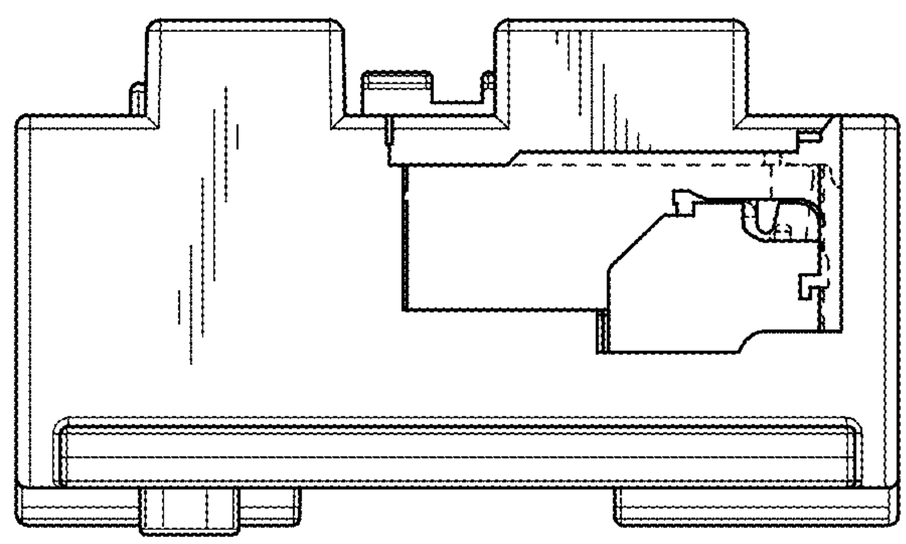
FIG. 8