US00D927428S

(12) United States Design Patent

Wermter

(10) Patent No.: US D927,428 S
(45) Date of Patent: ** Aug. 10, 2021

(54) **CONNECTOR MODULE**

(71) Applicant: **PHOENIX CONTACT GmbH & Co. KG**, Blomberg (DE)

(72) Inventor: **Peter Wermter**, Blomberg (DE)

(73) Assignee: **PHOENIX CONTACT GMBH & CO. KG**, Blomberg (DE)

(**) Term: **15 Years**

(21) Appl. No.: **29/729,853**

(22) Filed: **Mar. 31, 2020**

(30) **Foreign Application Priority Data**

Oct. 2, 2019 (DE) 40 2019 101 089.0

(51) **LOC (13) Cl.** **13-03**

(52) **U.S. Cl.**
USPC **D13/133**

(58) **Field of Classification Search**
USPC D13/110, 112, 118, 123, 158–161, 173, D13/174, 177, 178, 184, 199, 133, 146, D13/147

(Continued)

(56) **References Cited**

U.S. PATENT DOCUMENTS

D291,559 S * 8/1987 Narveson D13/199
D329,425 S * 9/1992 Hutton D13/184

(Continued)

Primary Examiner — Shawn T Gingrich
(74) *Attorney, Agent, or Firm* — Leydig, Voit & Mayer, Ltd.

(57) **CLAIM**

The ornamental design for a connector module, as shown and described.

DESCRIPTION

The file of this patent contains at least one drawing/photograph executed in color. Copies of this patent with color drawing(s)/photograph(s) will be provided by the Office upon request and payment of the necessary fee.

FIG. **1** is a front-top-right perspective view of a connector module showing a first embodiment of my new design, wherein the color portion forms a part of the claimed design;
FIG. **2** is a rear-top-right view thereof;
FIG. **3** is a top view thereof;
FIG. **4** is a bottom view thereof;
FIG. **5** is a front view thereof;
FIG. **6** is a rear view thereof;
FIG. **7** is a right side view thereof; and
FIG. **8** is a left side view thereof;
FIG. **9** is a front-top-right perspective view of a connector module showing a second embodiment of my new design, wherein the surface shading portion indicates color contrast;
FIG. **10** is a rear-top-right view thereof;
FIG. **11** is a top view thereof;
FIG. **12** is a bottom view thereof;
FIG. **13** is a front view thereof;
FIG. **14** is a rear view thereof;
FIG. **15** is a right side view thereof; and
FIG. **16** is a left side view thereof; and
FIG. **17** is a front-top-right perspective view of a connector module showing a third embodiment of my new design;
FIG. **18** is a rear-top-right view thereof;
FIG. **19** is a top view thereof;
FIG. **20** is a bottom view thereof;
FIG. **21** is a front view thereof;
FIG. **22** is a rear view thereof;
FIG. **23** is a right side view thereof; and,
FIG. **24** is a left side view thereof.

The broken lines in the drawings illustrate portions of the connector module that form no part of the claimed design.

1 Claim, 24 Drawing Sheets
(7 of 24 Drawing Sheet(s) Filed in Color)

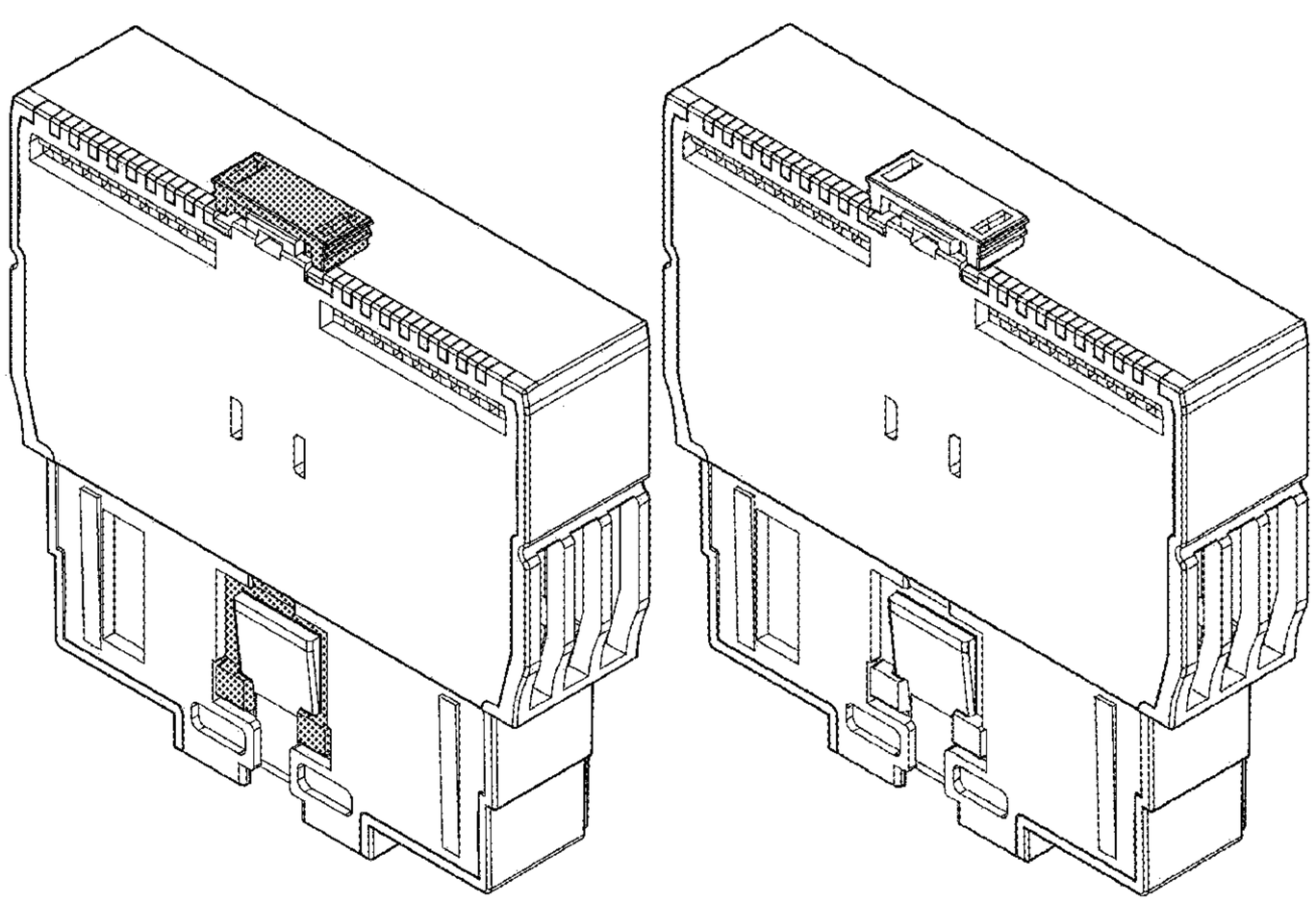

(58) **Field of Classification Search**
CPC ... H01R 4/38; H01R 9/24; H01R 9/26; H01R 12/00; H01R 12/71; H01R 12/72; H01R 12/73; H01R 25/14; H01R 25/16; H02B 1/052
See application file for complete search history.

(56) **References Cited**

U.S. PATENT DOCUMENTS

D563,902	S	*	3/2008	Radau	D13/162
D567,191	S	*	4/2008	Eichinger	D13/158
D600,213	S	*	9/2009	Inoue	D13/133
D685,331	S	*	7/2013	Correll	D13/147
D693,776	S	*	11/2013	Skowranek	D13/162
D786,796	S	*	5/2017	Frye	D13/133
D822,619	S	*	7/2018	Miholic	D13/159
10,079,454	B1	*	9/2018	Wu	H01R 13/6273
D833,392	S	*	11/2018	Frye	D13/133
2001/0034165	A1	*	10/2001	Landis	H01R 12/7076 439/716
2015/0056835	A1	*	2/2015	Wu	H01R 9/2608 439/251
2016/0268748	A1	*	9/2016	Best	H01R 9/2408
2018/0069359	A1	*	3/2018	Muller	H05K 7/1475
2019/0053395	A1	*	2/2019	Kettern	H05K 7/1474
2020/0307923	A1	*	10/2020	Ruppert	H01R 43/00

* cited by examiner

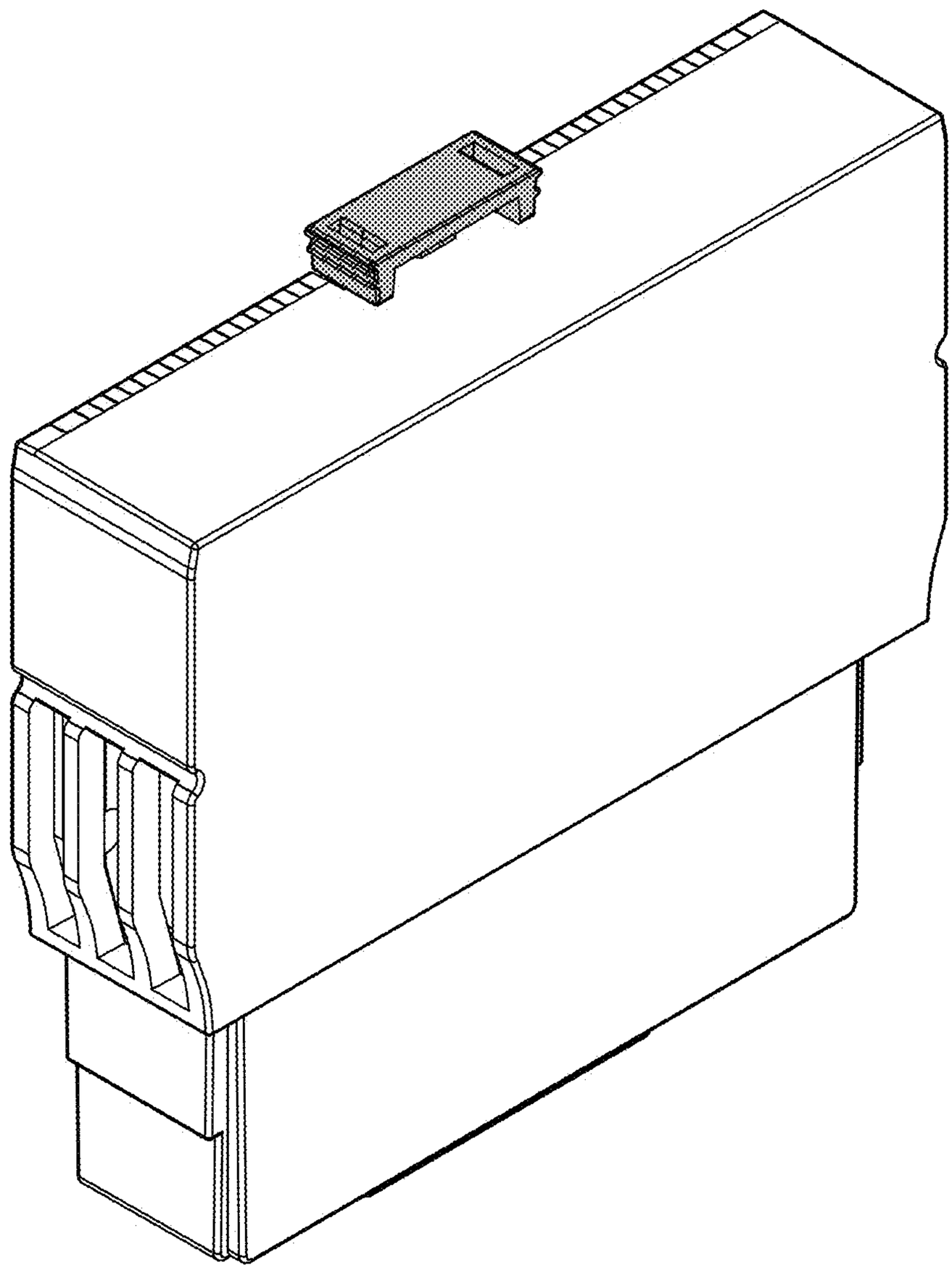

FIG. 1

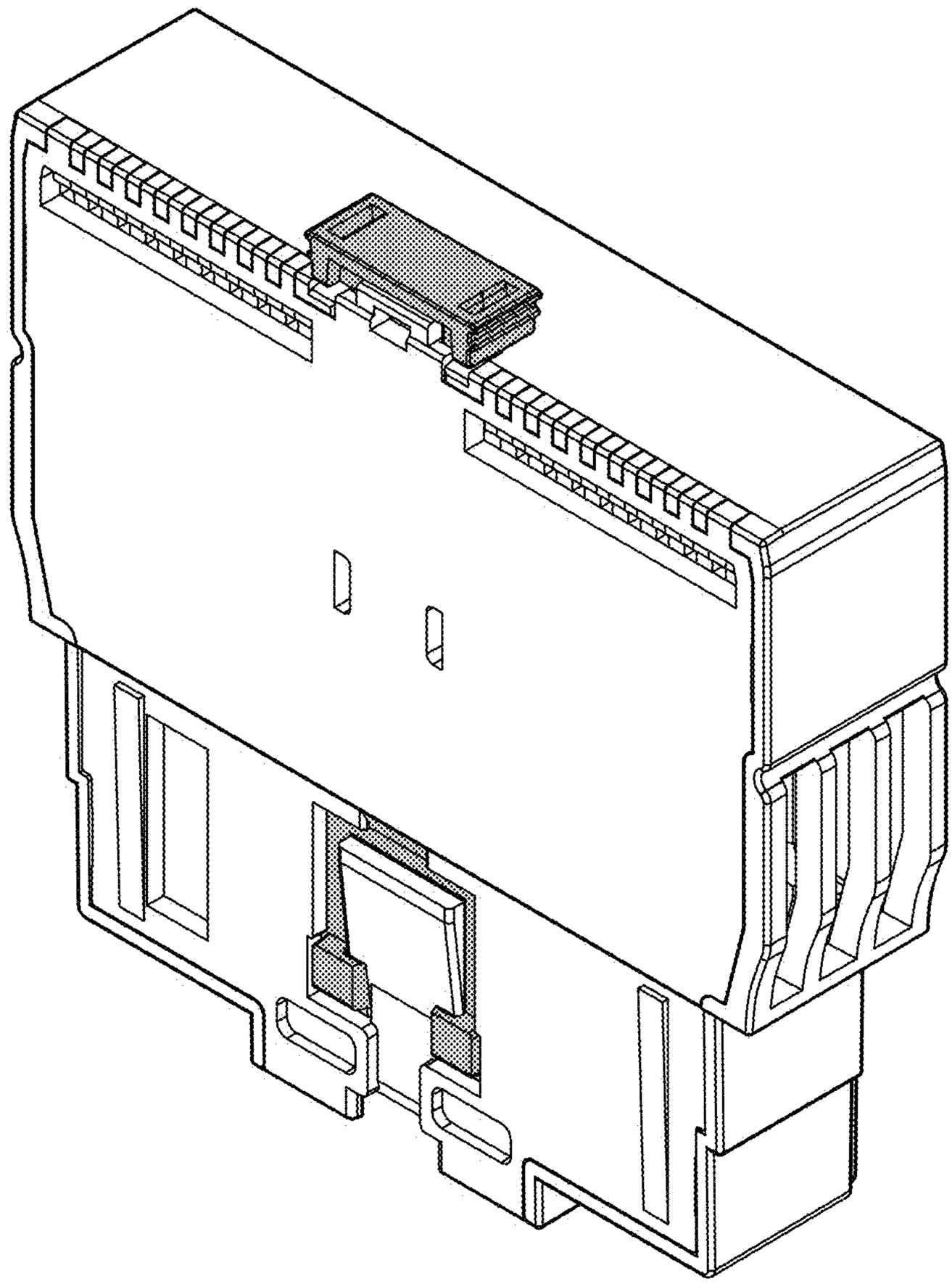

FIG. 2

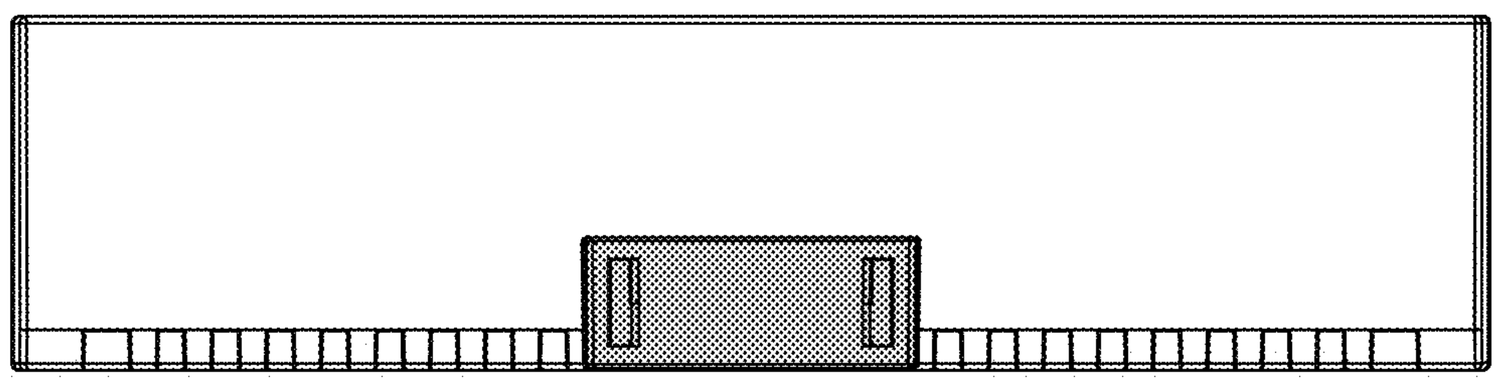

FIG. 3

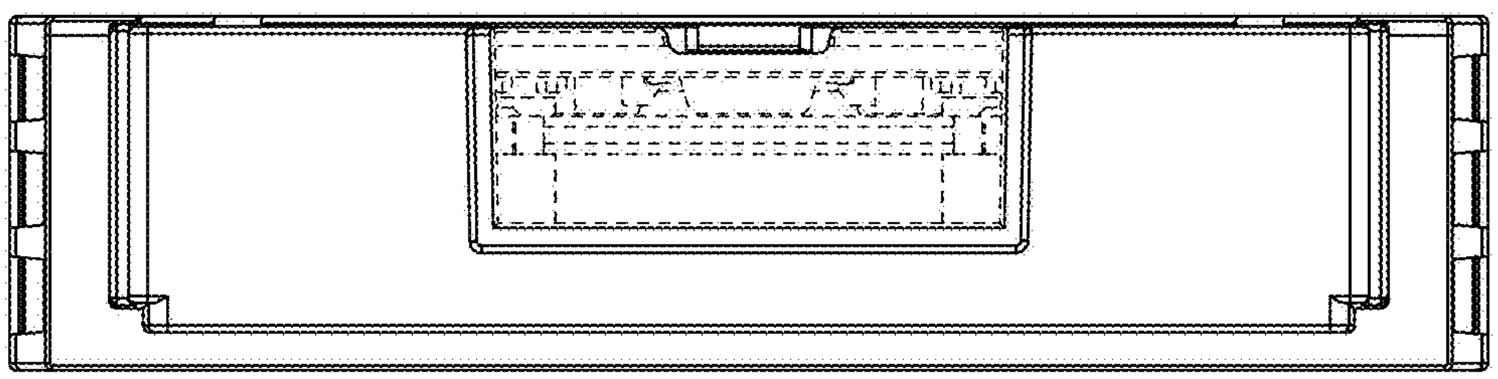

FIG. 4

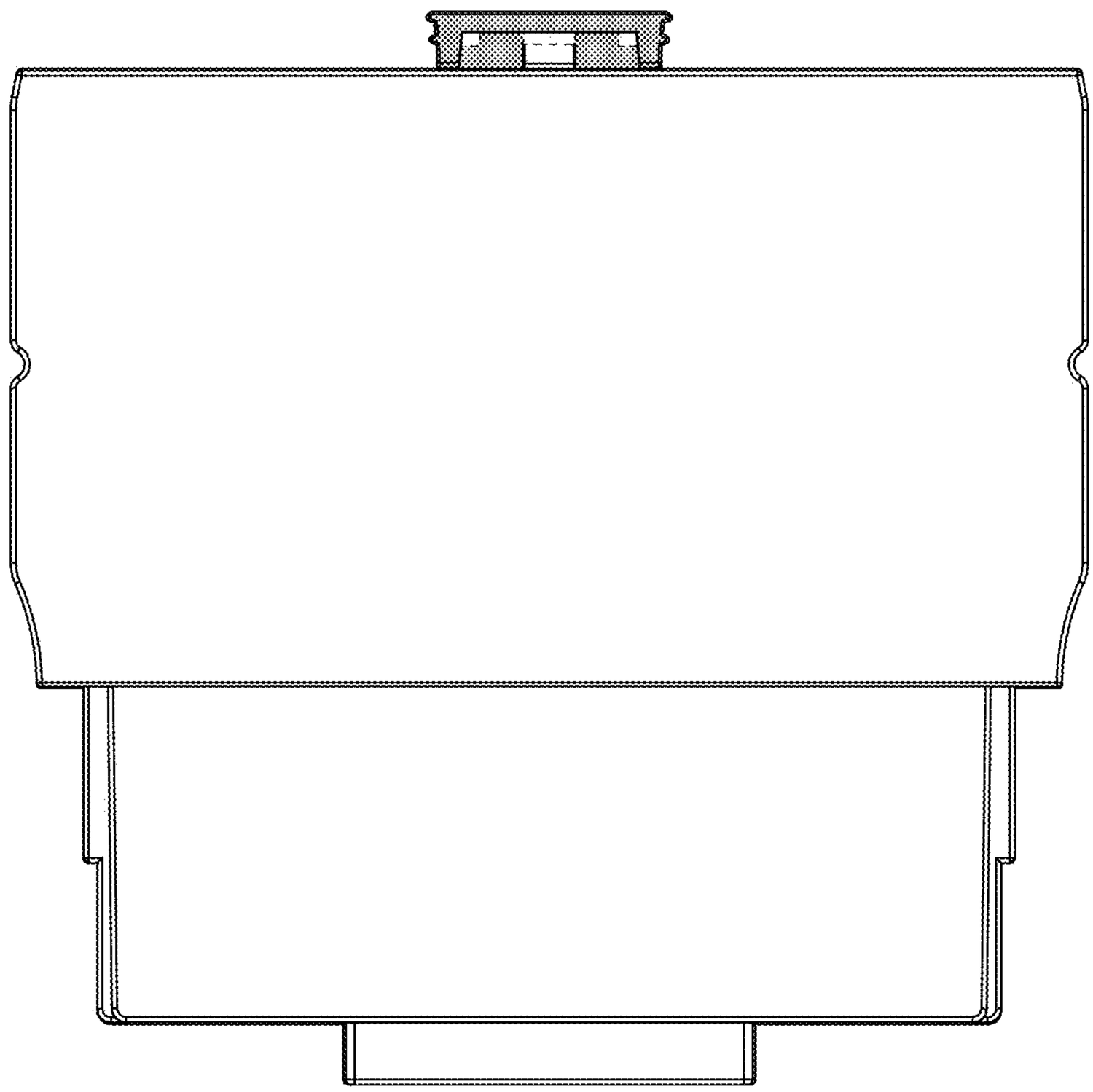

FIG. 5

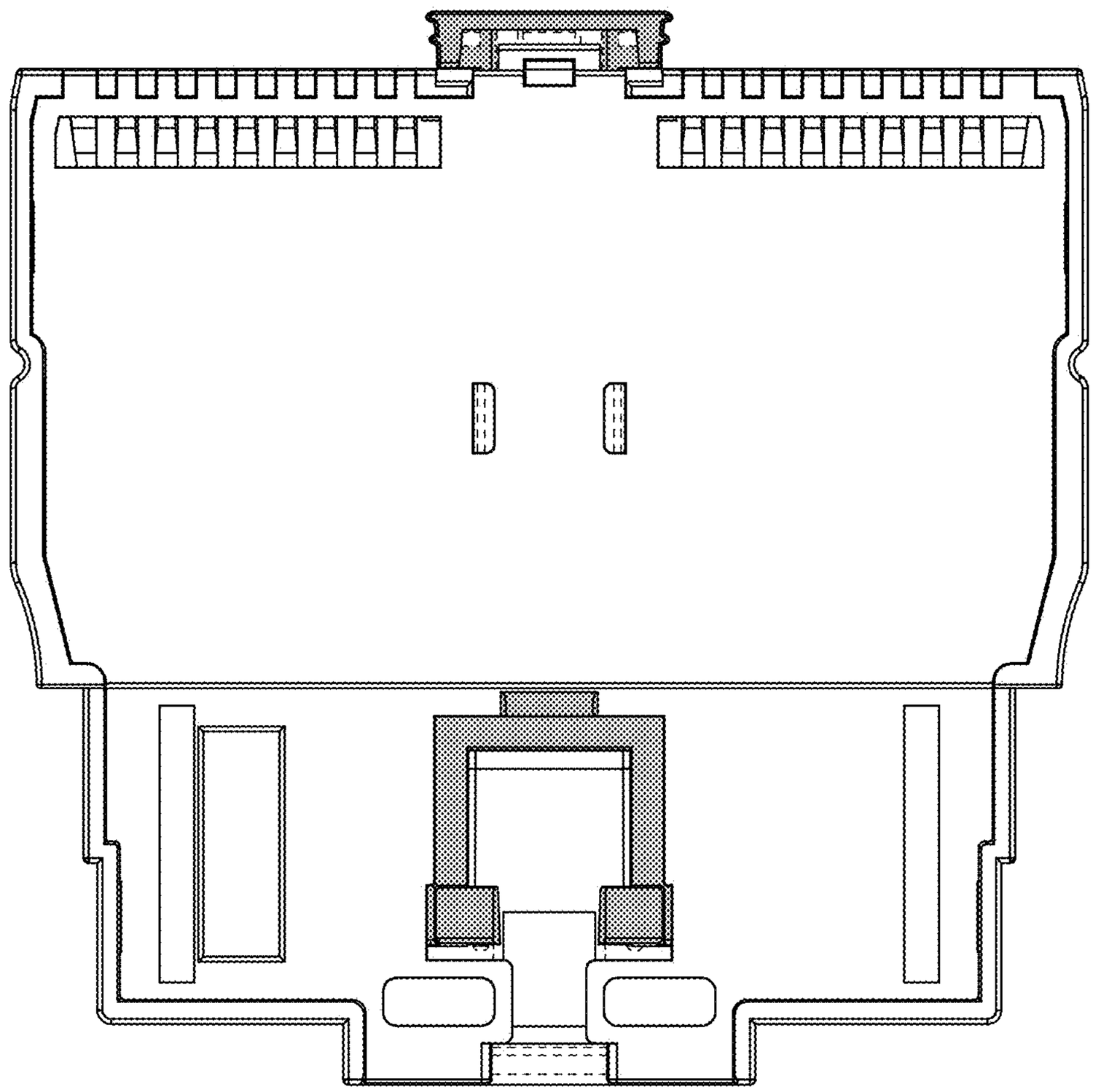

FIG. 6

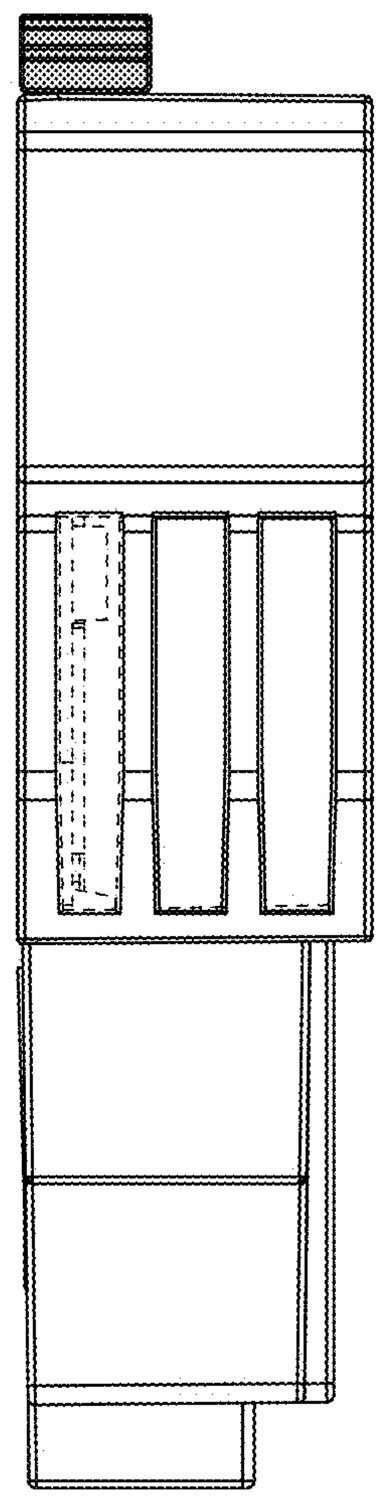

FIG. 7

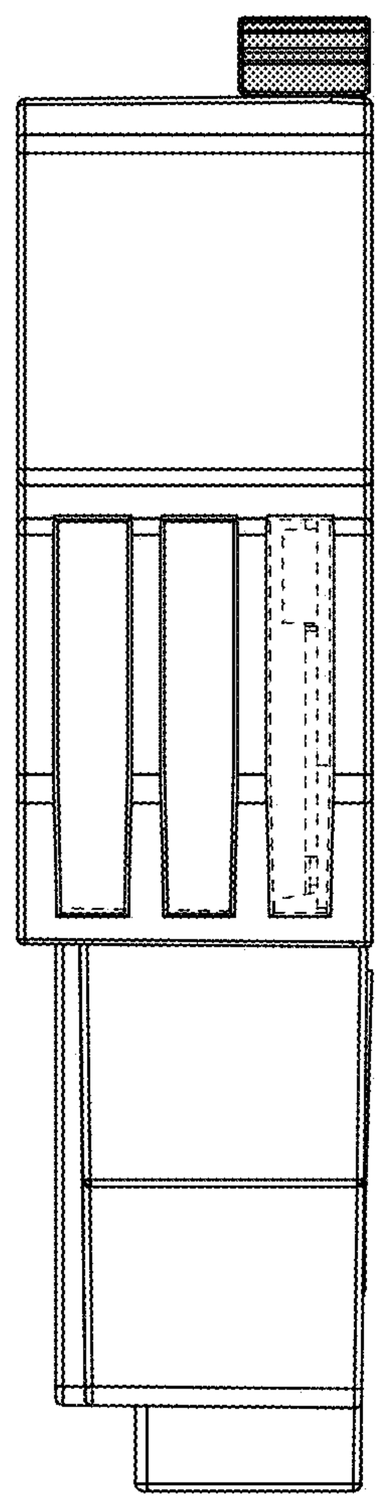

FIG. 8

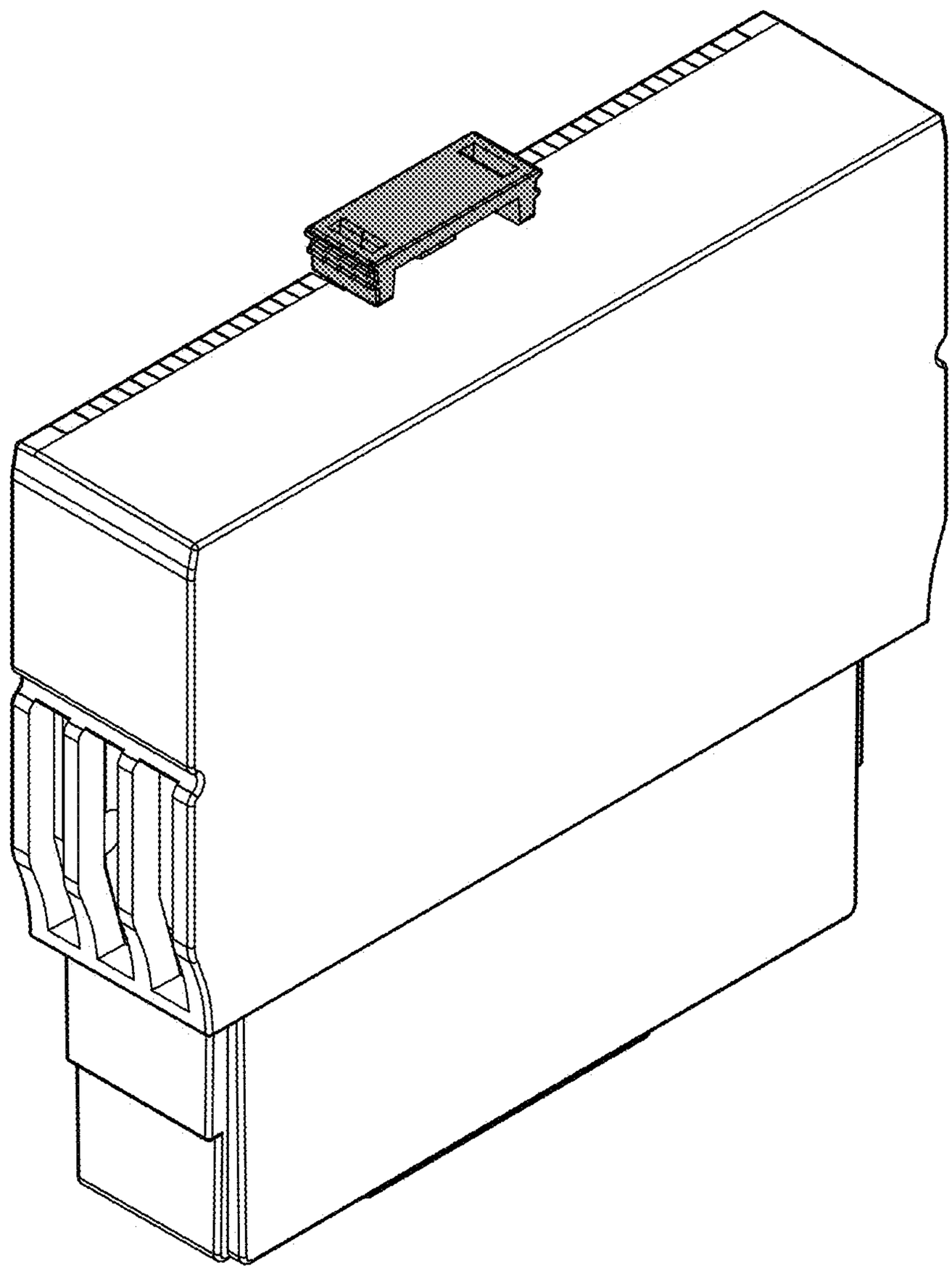

FIG. 9

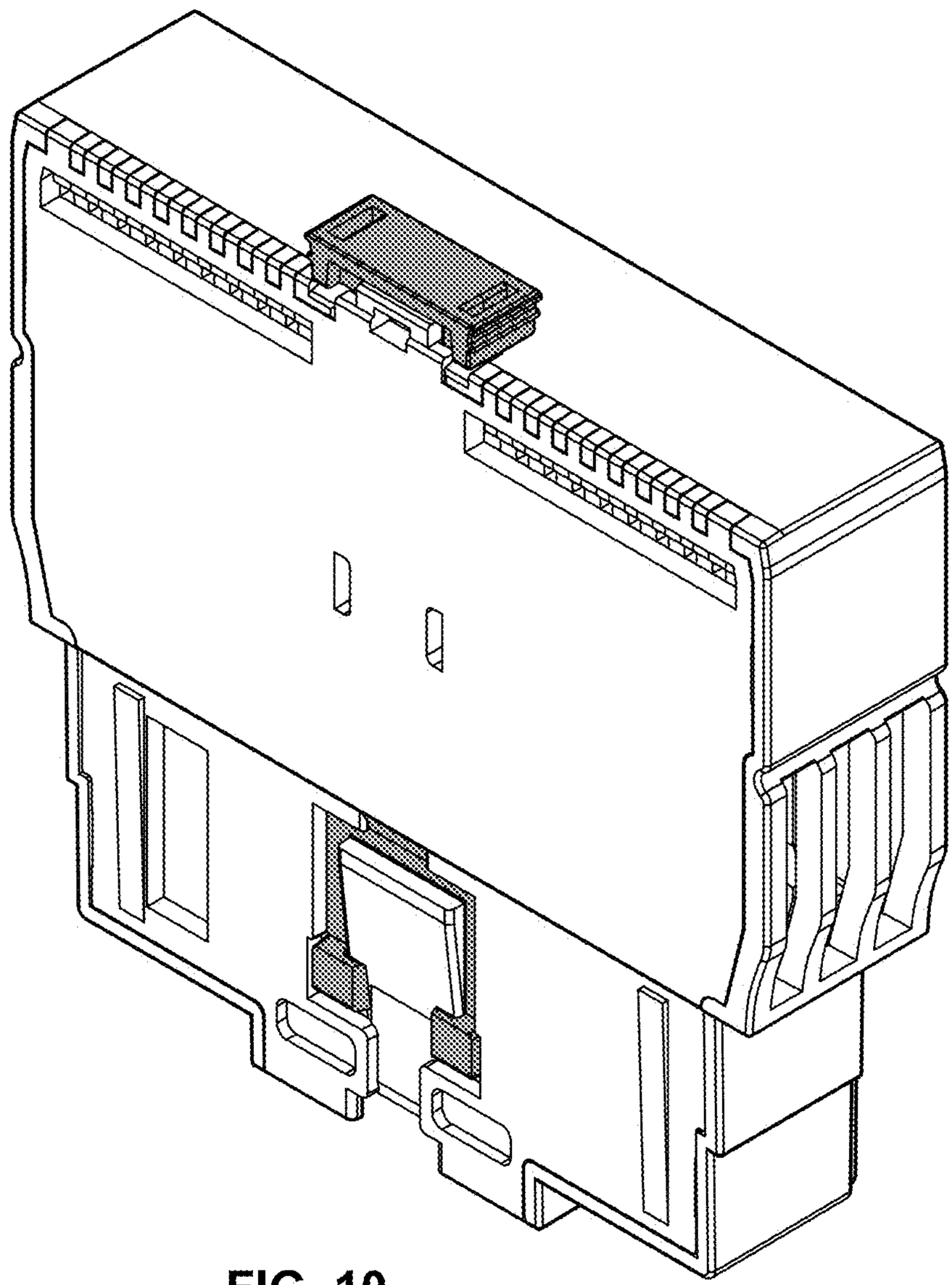

FIG. 10

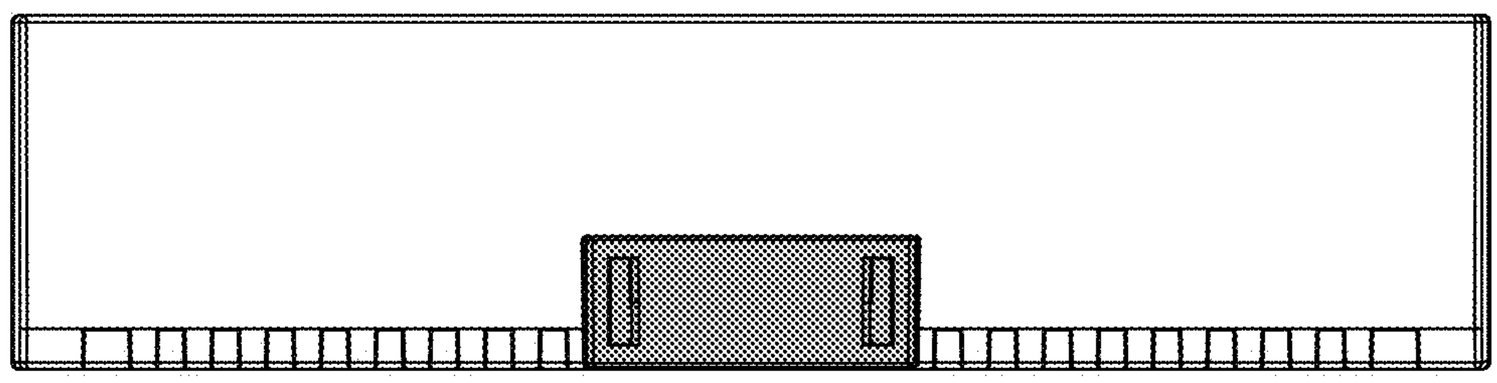

FIG. 11

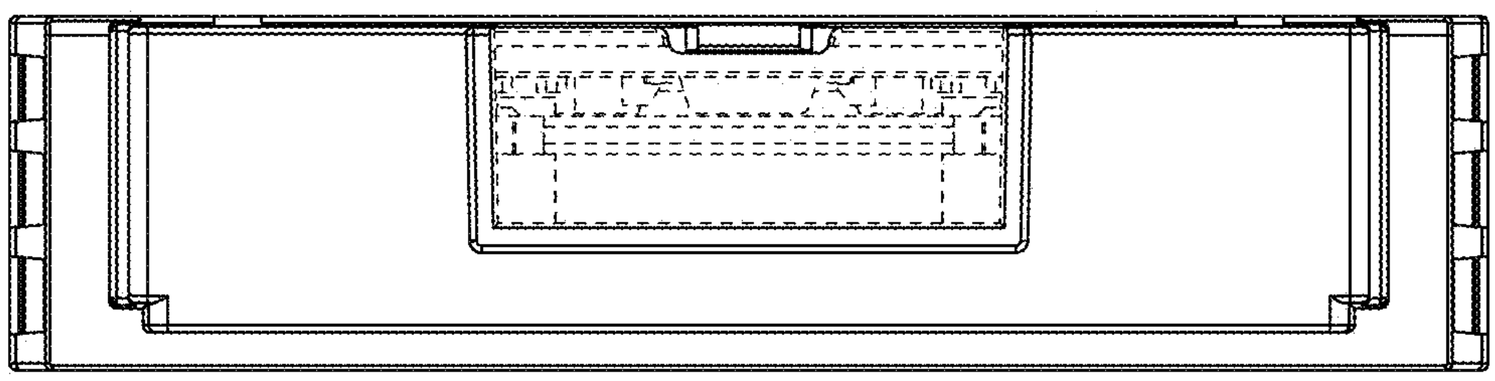

FIG. 12

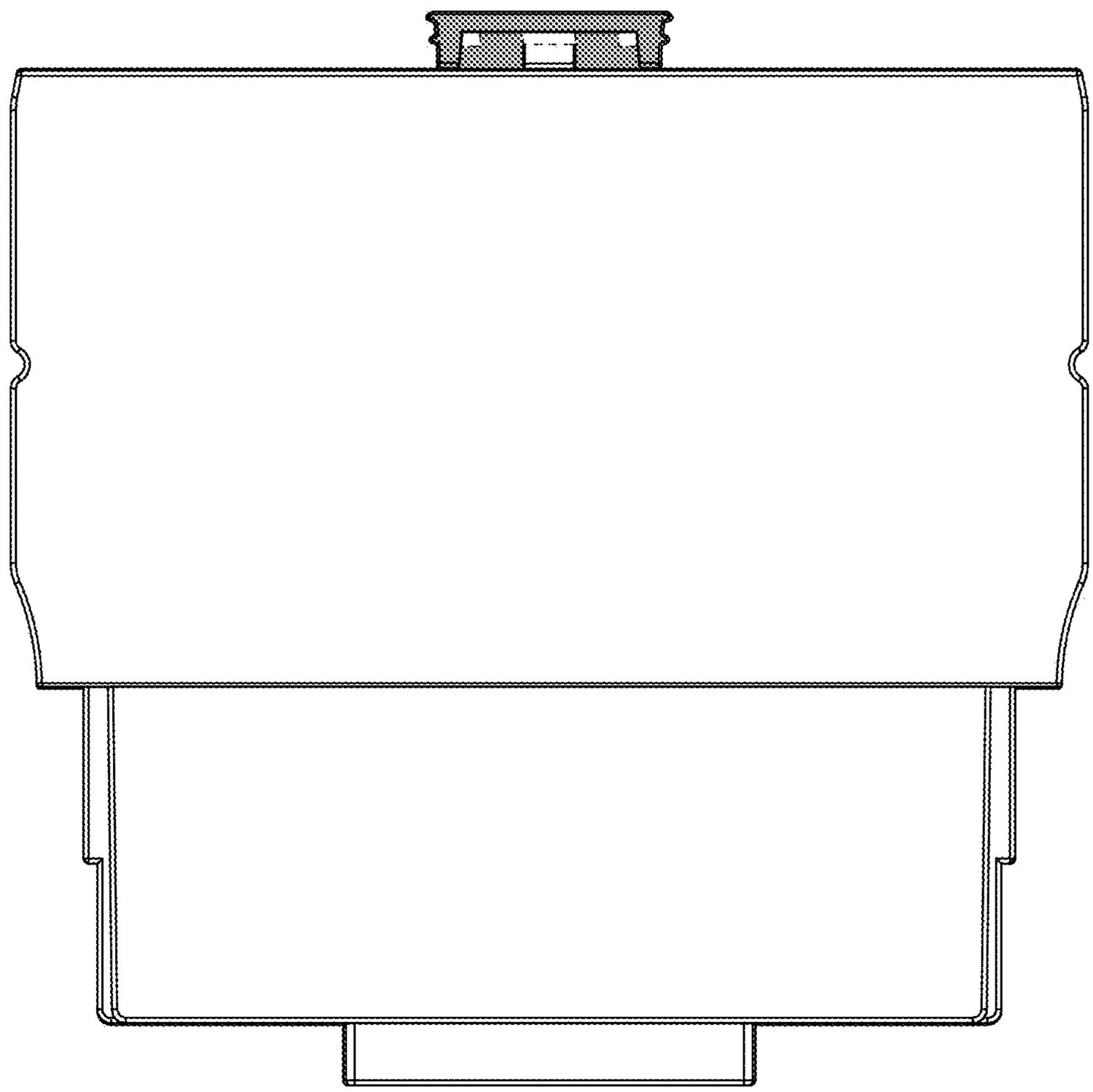

FIG. 13

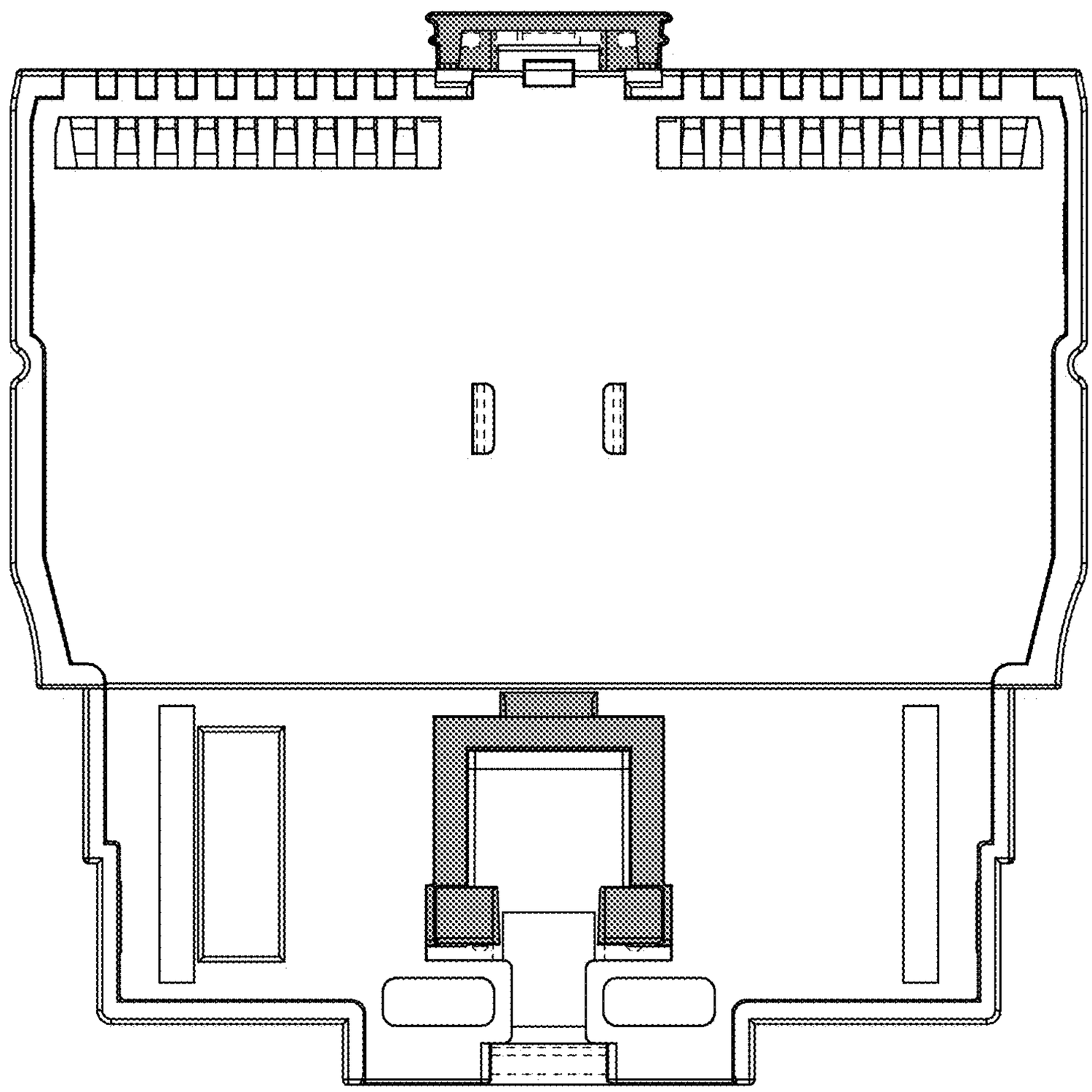

FIG. 14

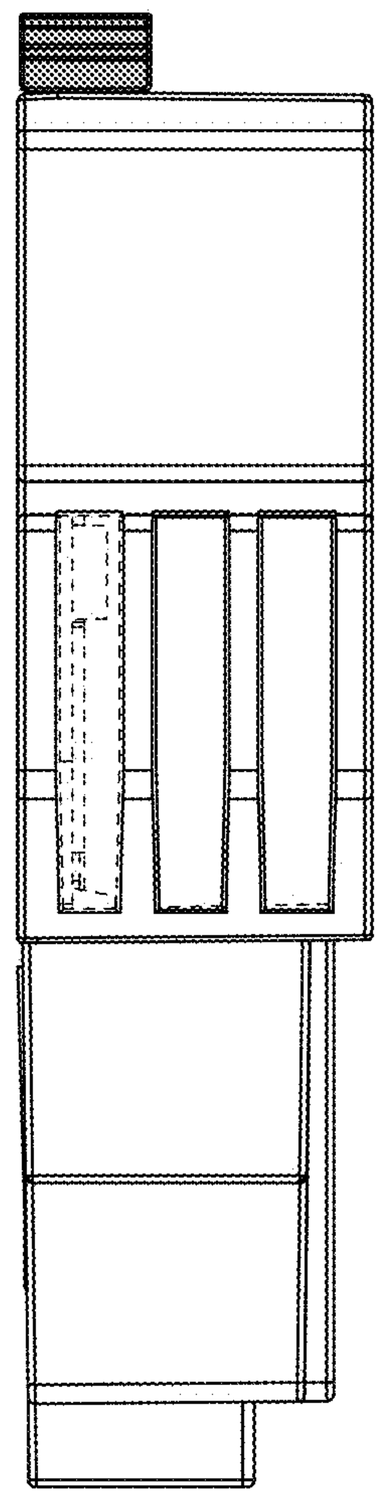

FIG. 15

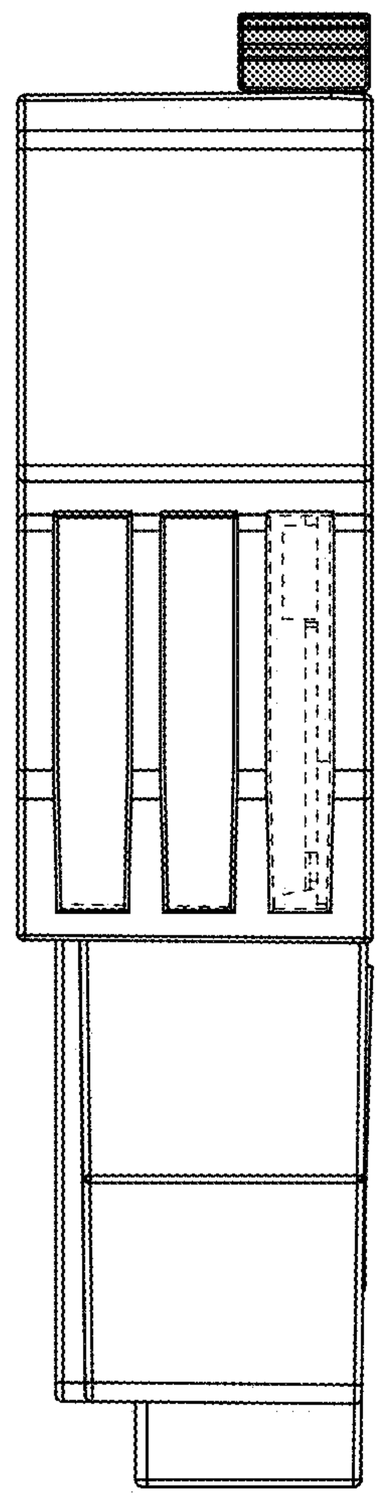

FIG. 16

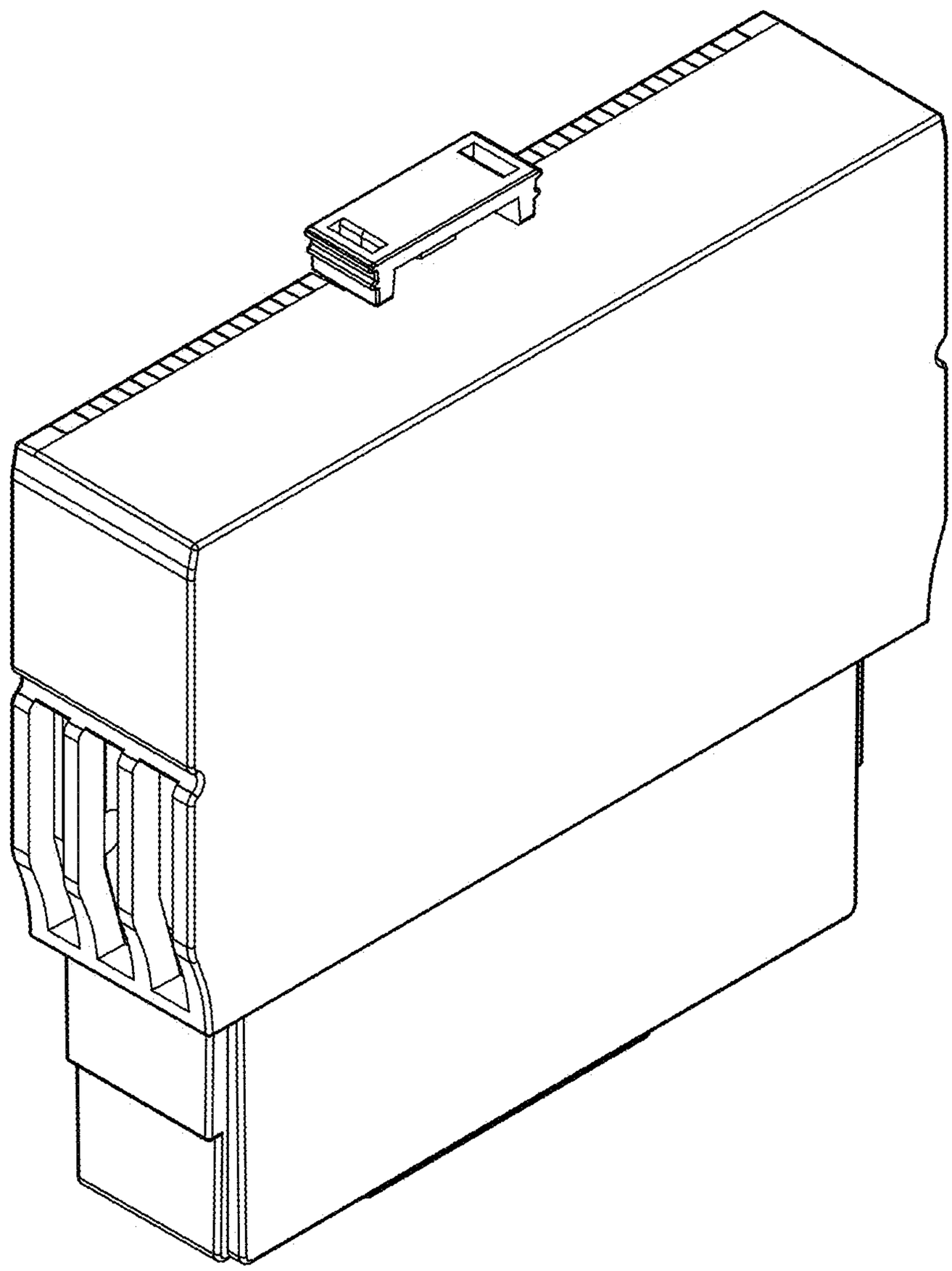

FIG. 17

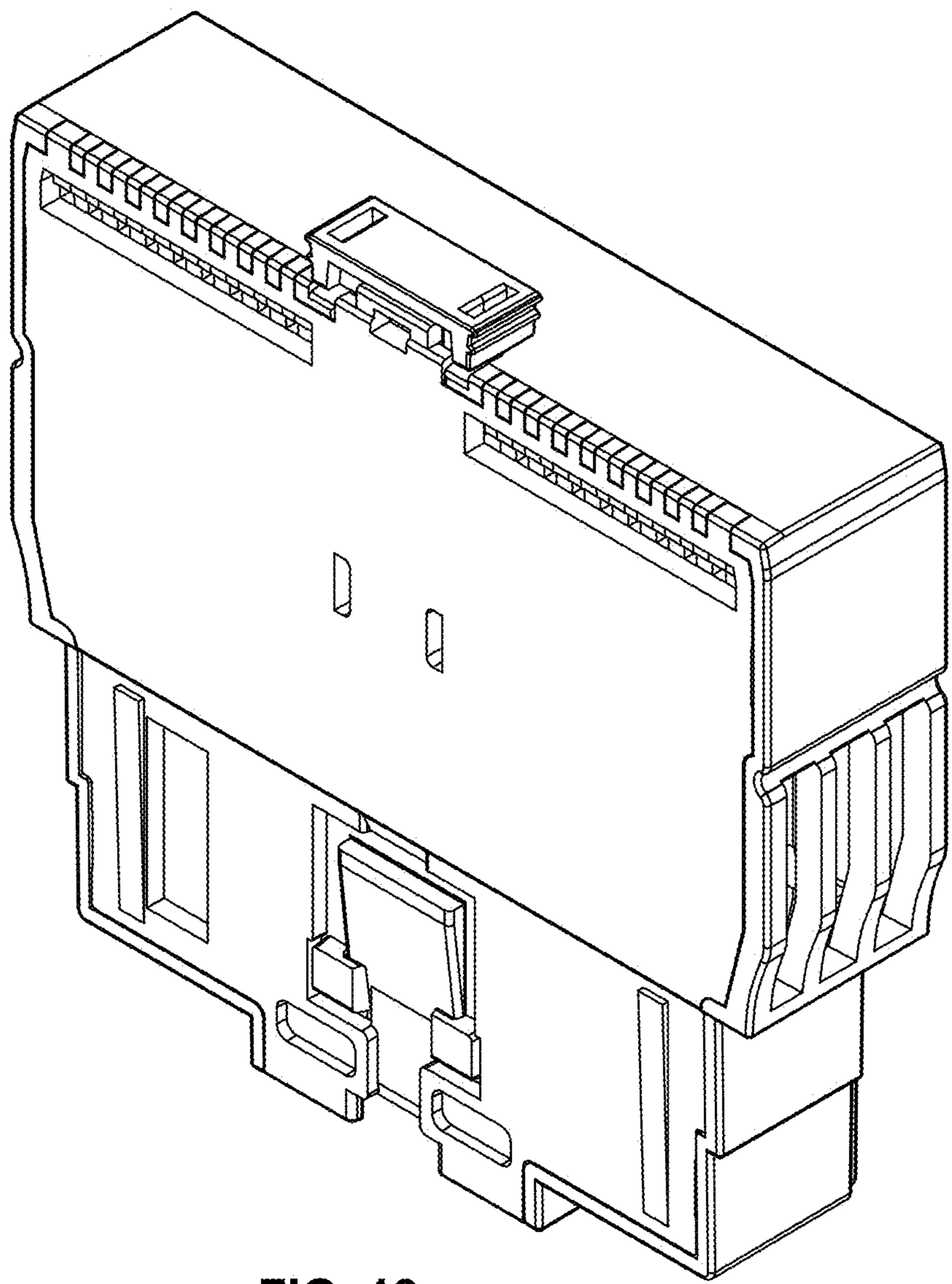

FIG. 18

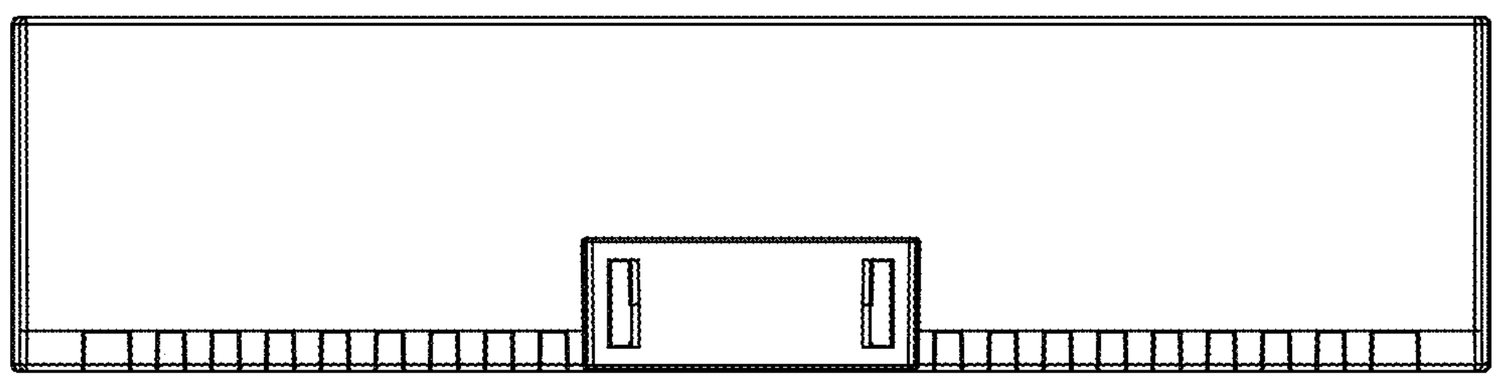

FIG. 19

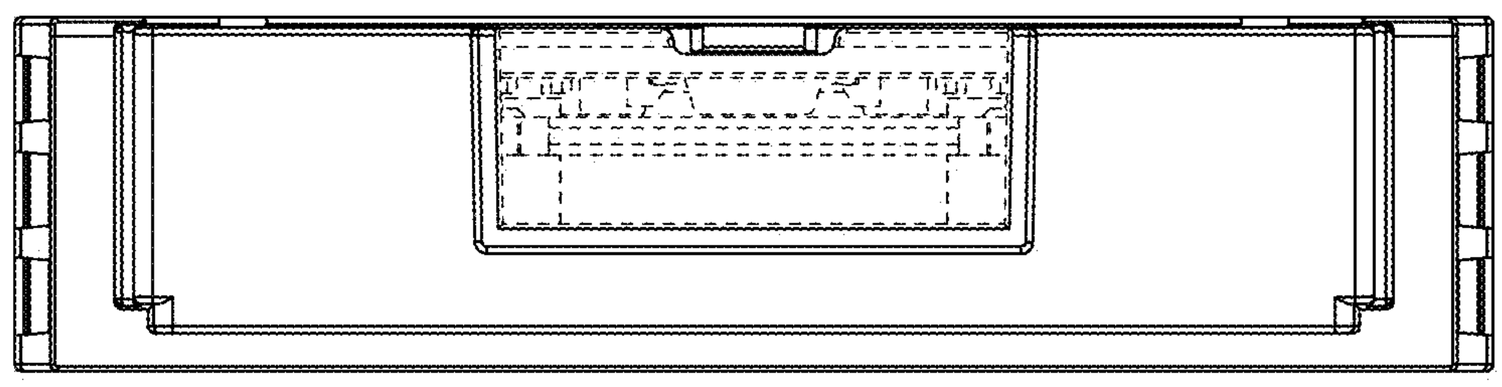

FIG. 20

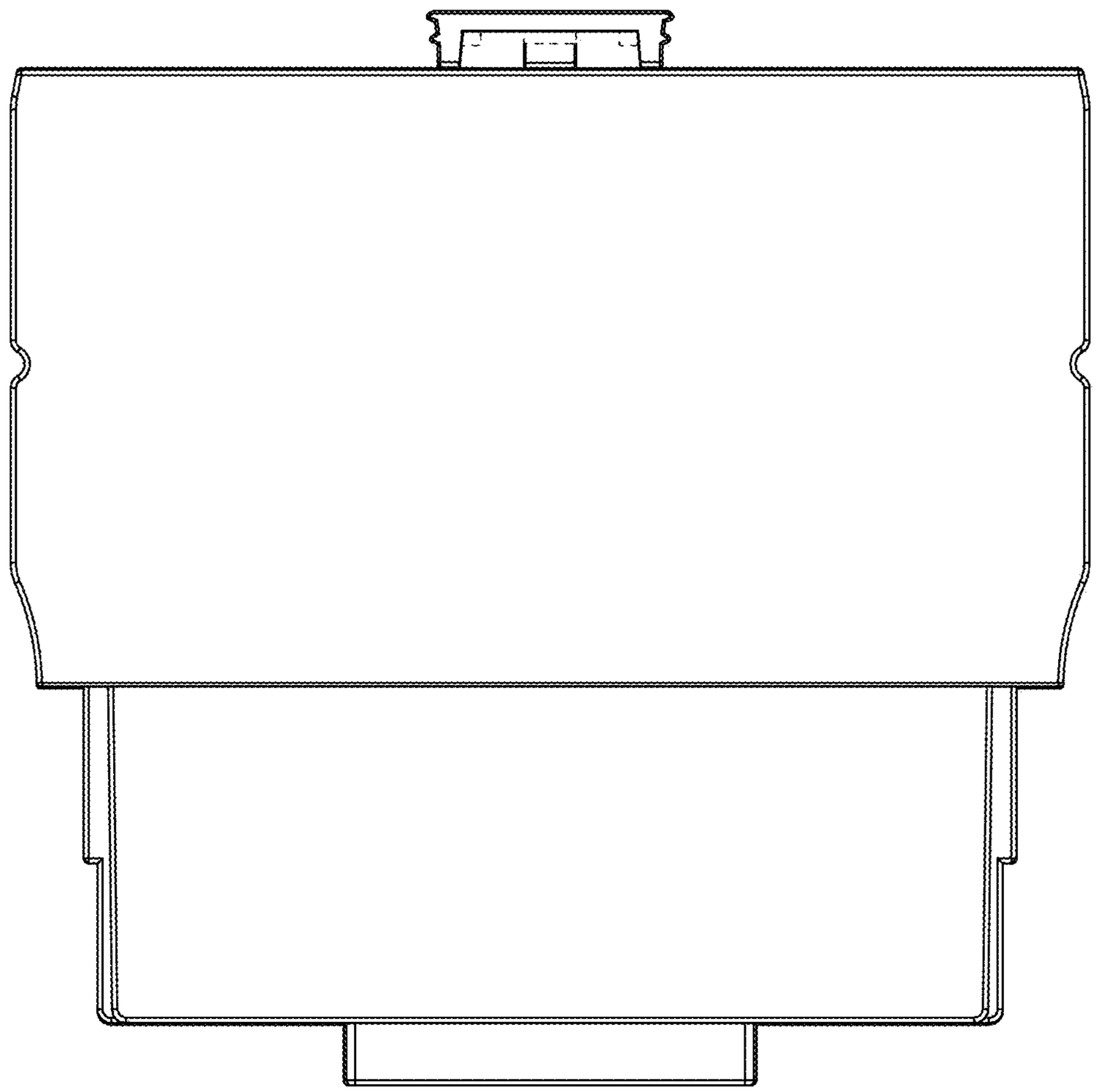

FIG. 21

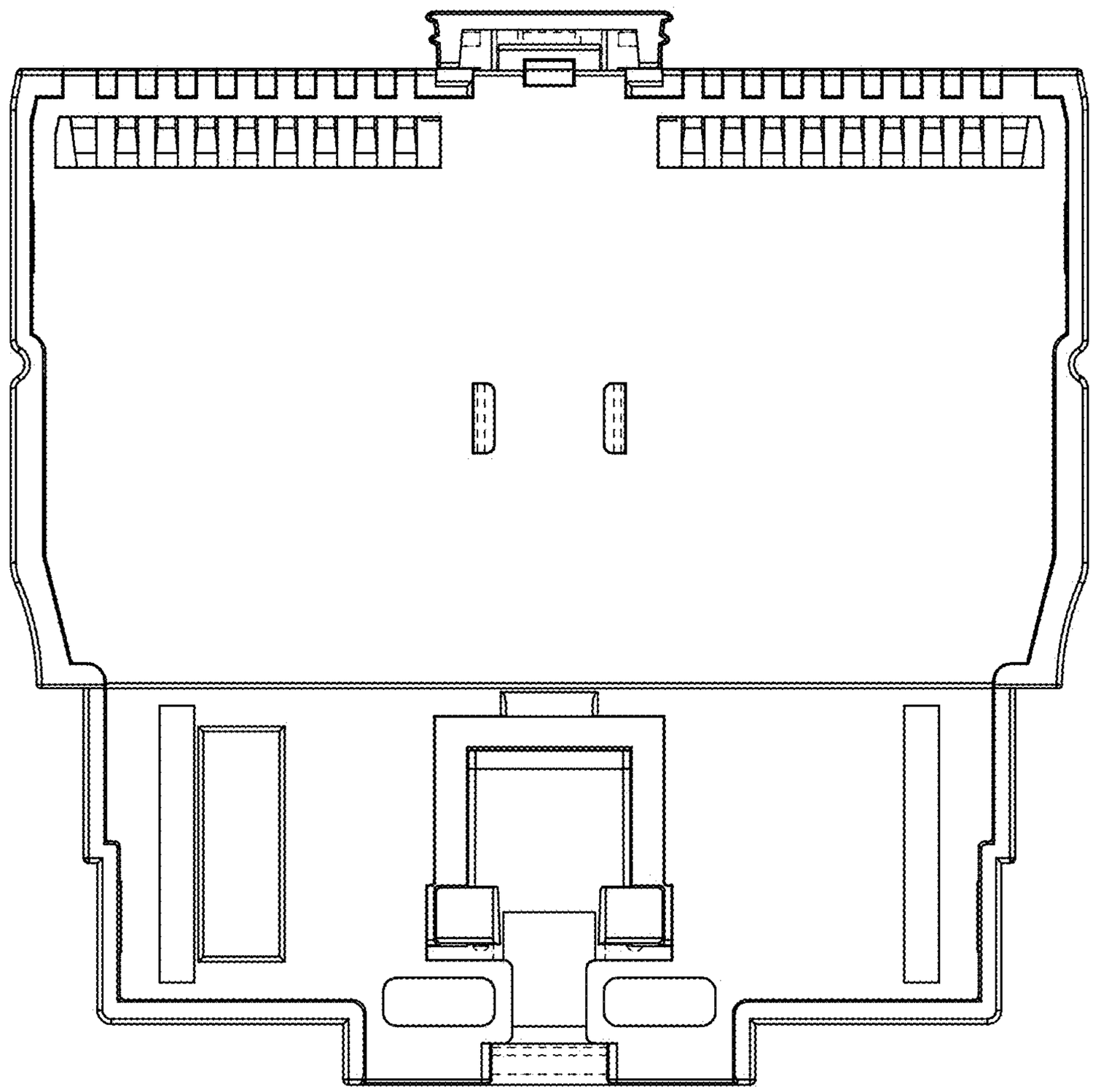

FIG. 22

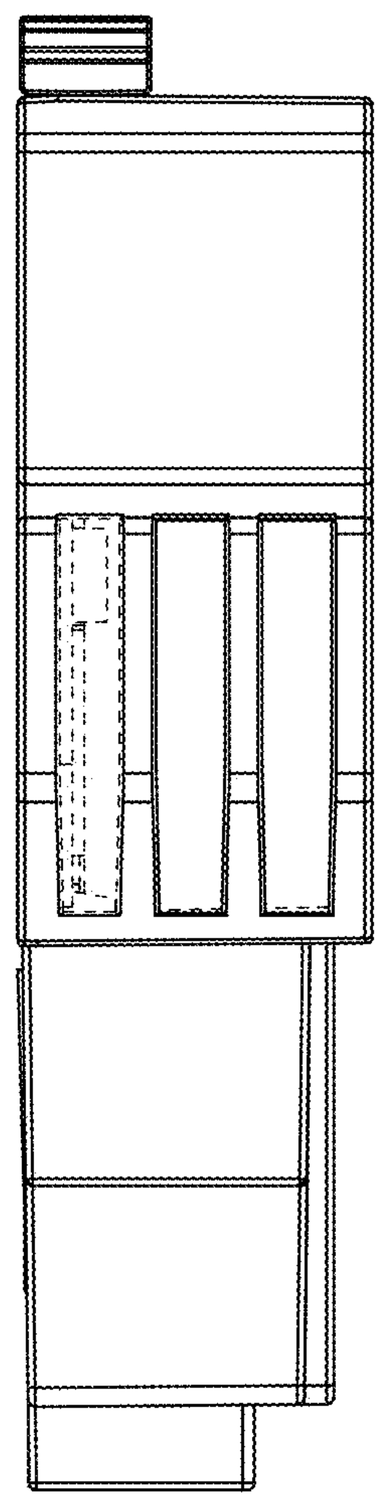

FIG. 23

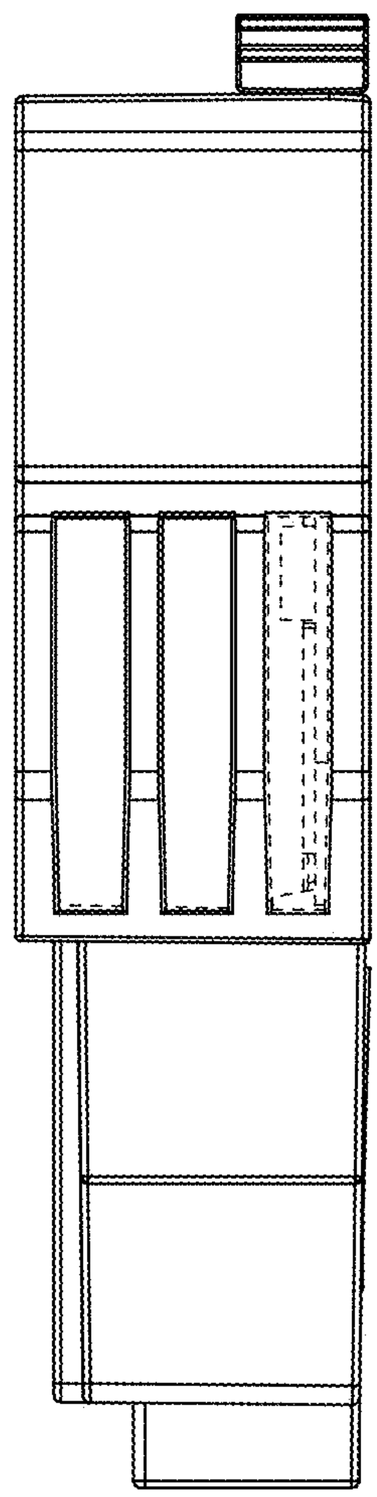

FIG. 24