US00D927007S

(12) United States Design Patent

Escamilla

(10) Patent No.: US D927,007 S
(45) Date of Patent: ** Aug. 3, 2021

(54) **KNEE ICE PACK**

(71) Applicant: **VIVE HEALTH LLC**, Naples, FL (US)

(72) Inventor: **Juan Carlos Lopez Escamilla**, Naples, FL (US)

(73) Assignee: **Vive Health LLC**, Naples, FL (US)

(**) Term: **15 Years**

(21) Appl. No.: **29/689,763**

(22) Filed: **May 1, 2019**

(51) **LOC (13) Cl.** **24-04**

(52) **U.S. Cl.**
USPC **D24/207**

(58) **Field of Classification Search**
USPC D24/206–207, 189–192, 200, 125, 127
CPC A61F 7/02; A61F 7/10; A61F 7/103; A61F 2007/0042; A61F 2007/023; A61F 2007/231; A61F 2007/108; A61F 5/0106
See application file for complete search history.

(56) **References Cited**

U.S. PATENT DOCUMENTS

4,042,803 A * 8/1977 Bickford H05B 3/342 D24/206
4,628,932 A * 12/1986 Tampa A61F 7/10 383/901
4,688,572 A * 8/1987 Hubbard A61F 7/02 126/204
D324,270 S * 2/1992 Raya D24/207
D328,792 S * 8/1992 Salmon D24/207
D394,707 S * 5/1998 Tsubooka D24/190
D429,818 S * 8/2000 Lamping D24/206
D496,108 S * 9/2004 Machin D24/190
7,959,590 B2 * 6/2011 Scott A61F 5/0106 602/23
D654,181 S * 2/2012 Chiang D24/190
D660,439 S * 5/2012 Chen D24/190
(Continued)

OTHER PUBLICATIONS

Vive Knee Ice Pack Wrap—Cold/Hot Gel Compression Brace—Heat Support Strap For Arthritis Pain, Tendonitis, ACL, Athletic Injury, Osteoarthritis, Woman, Men, Running, Meniscus and Patella Surgery. web.https://www.amazon.com/VIVE-Knee-Ice-Brace/dp/B079K6MYKJ. Feb. 2, 2018.*

Primary Examiner — Wan Laymon
(74) *Attorney, Agent, or Firm* — Workman Nydegger

(57) **CLAIM**

The ornamental design for a knee ice pack, as shown and described.

DESCRIPTION

FIG. **1** is a front perspective view of a knee ice pack showing the new design;
FIG. **2** is a back perspective view of a knee ice pack showing the new design;
FIG. **3** is a reduced front view thereof;
FIG. **4** is a reduced back view thereof;
FIG. **5** is a top view thereof;
FIG. **6** is a bottom view thereof;
FIG. **7** is a reduced right elevation view thereof;
FIG. **8** is a reduced left elevation view thereof;
FIG. **9** is a reduced exploded back perspective view showing exemplary ice packs exterior to the knee ice pack;
FIG. **10** is a back perspective view showing exemplary ice packs partially slid into the respective ice pack holders of the knee ice pack; and,
FIG. **11** is a back perspective view showing exemplary ice packs fully slid into the respective ice pack holders of the knee ice packet.
The dot-dot-dot and dash broken lines in the drawings are for the purpose of illustrating environment and portions of the article that form no part of the claimed design.

1 Claim, 9 Drawing Sheets

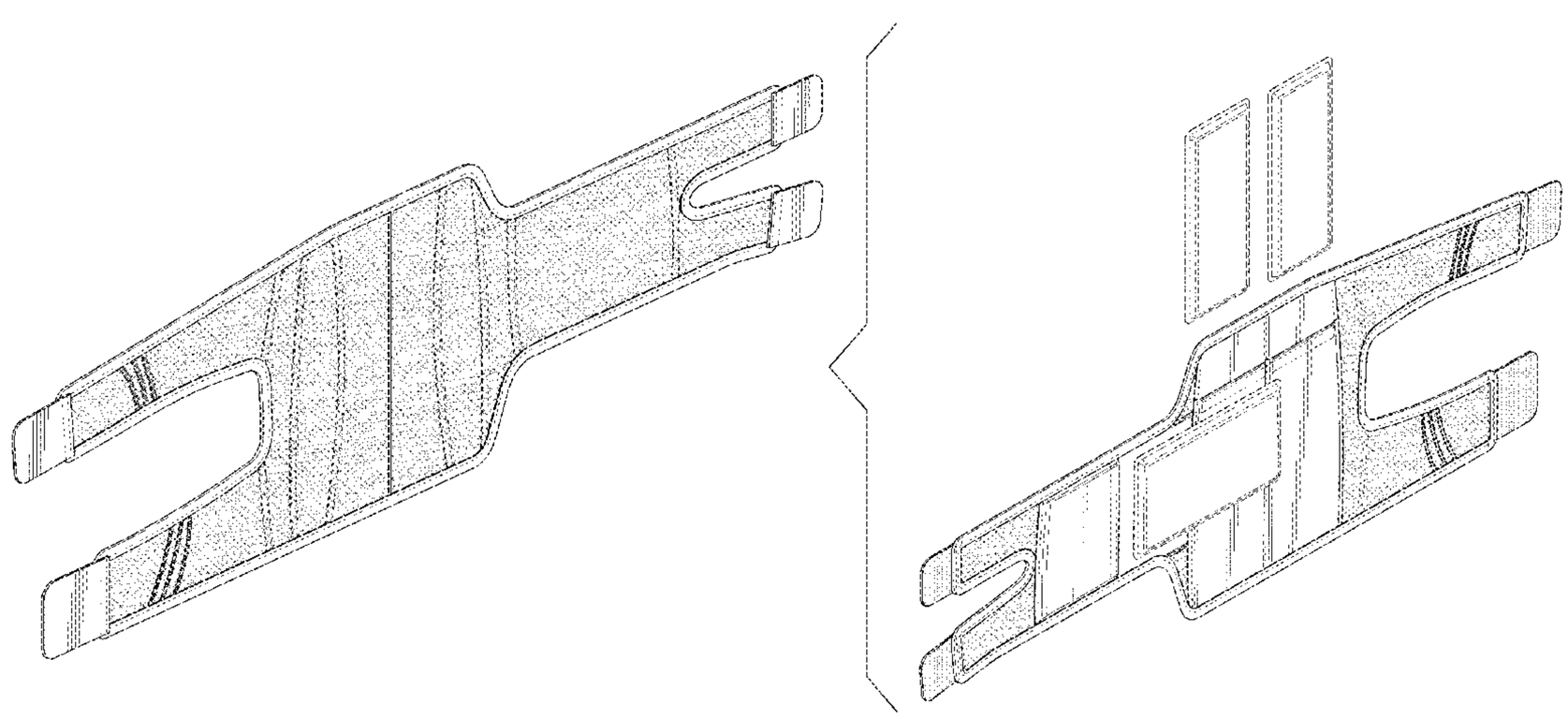

(56) **References Cited**

U.S. PATENT DOCUMENTS

D662,213	S *	6/2012	Quisenberry	D24/206
2010/0152823	A1 *	6/2010	Muchowicz	A61F 7/10 607/112

* cited by examiner

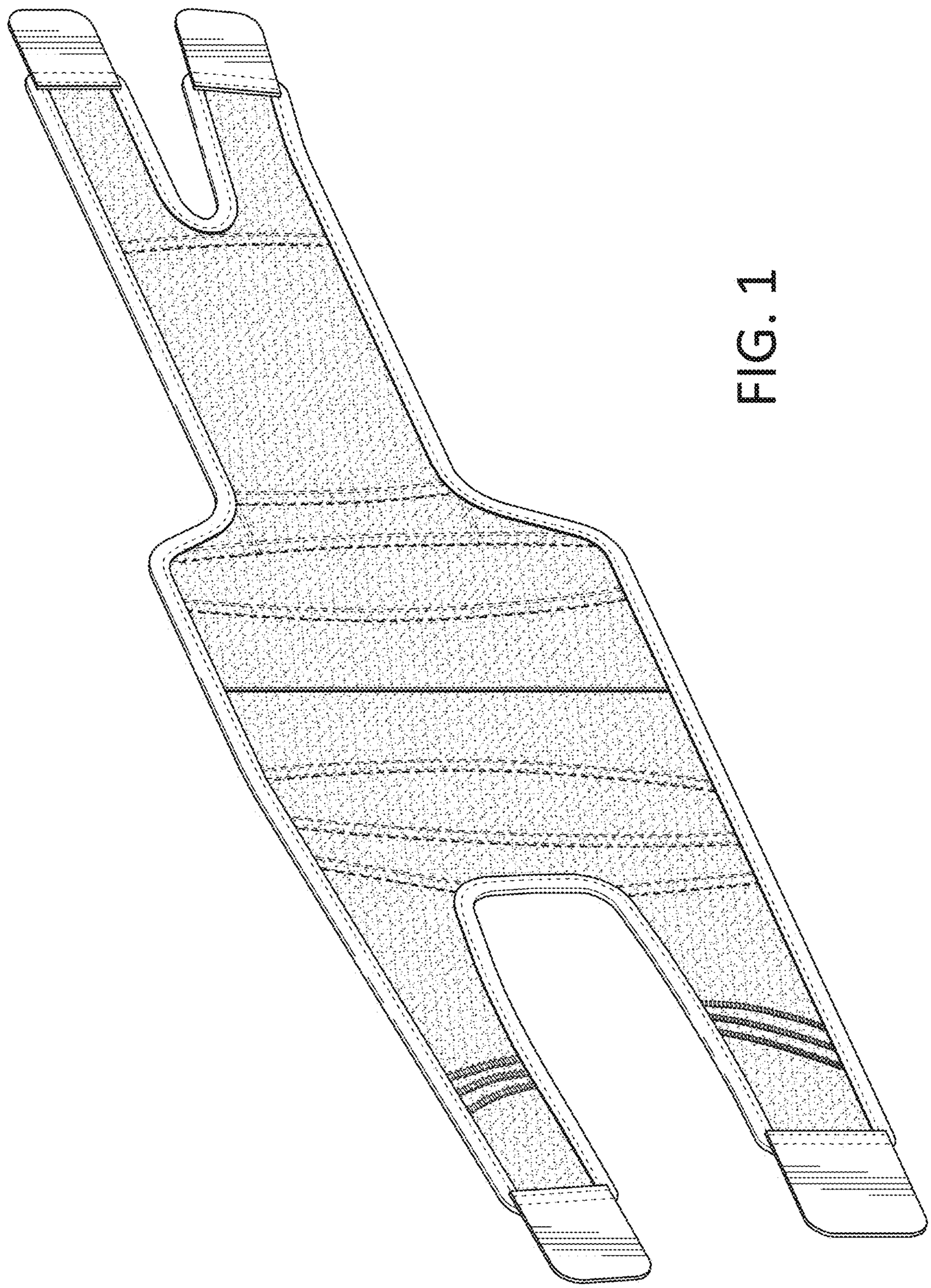

FIG. 1

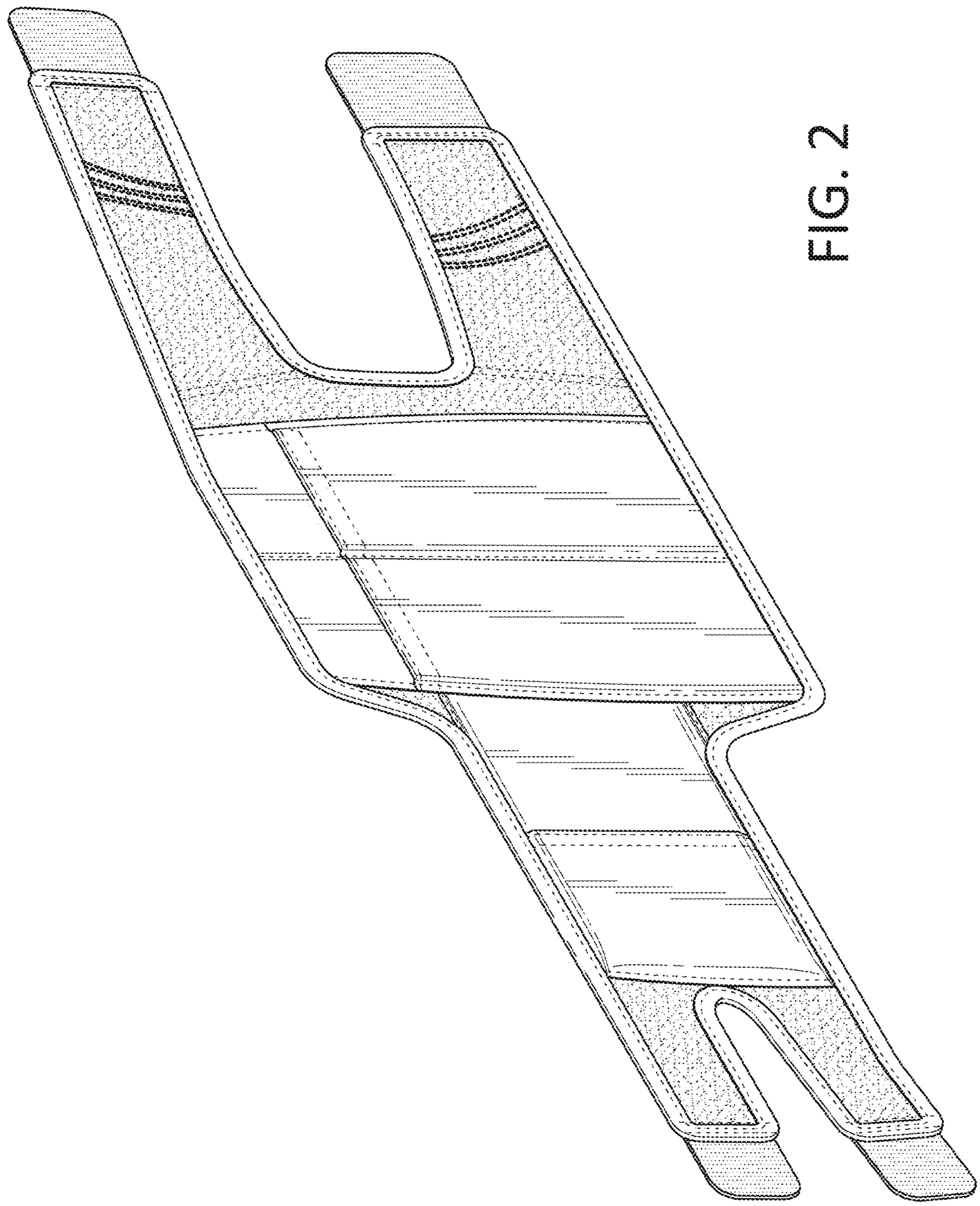

FIG. 2

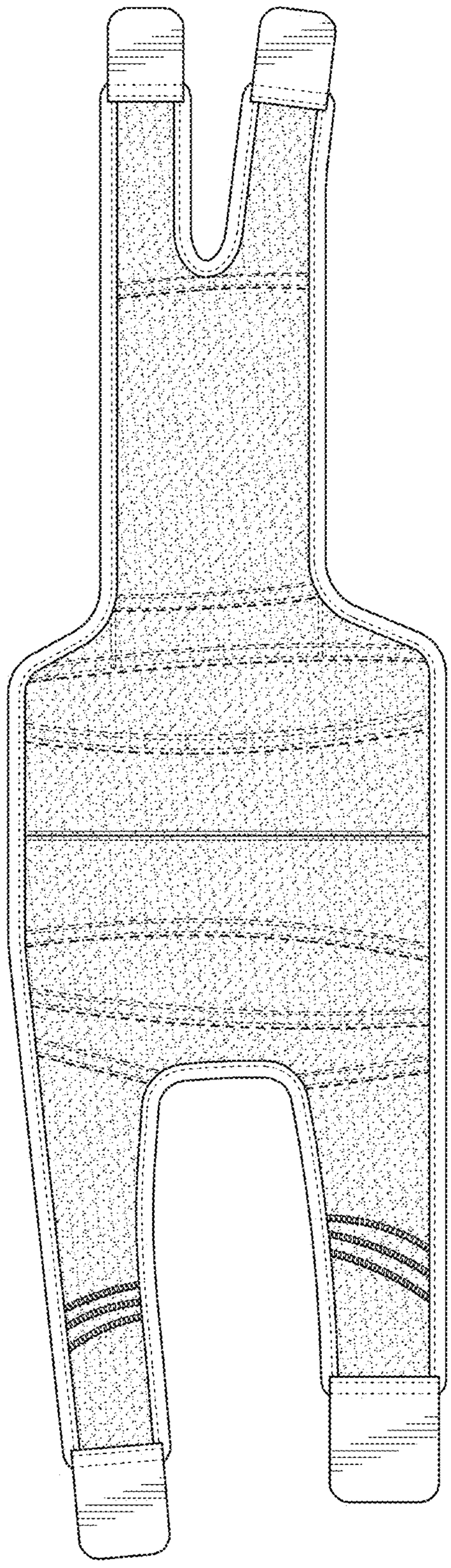

FIG. 3

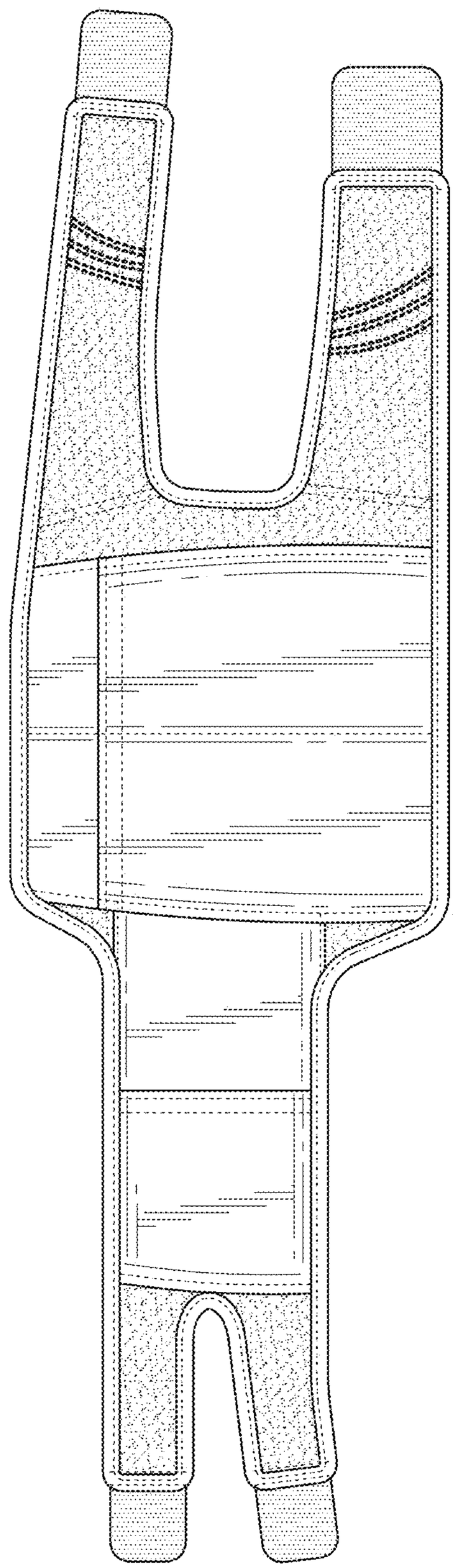

FIG. 4

FIG. 5

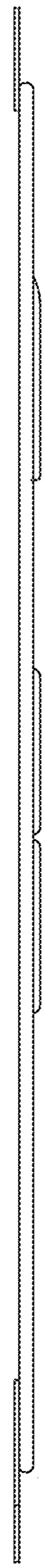

FIG. 6

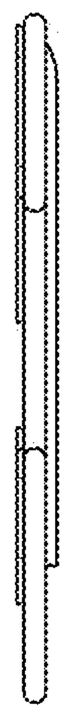

FIG. 8

FIG. 7

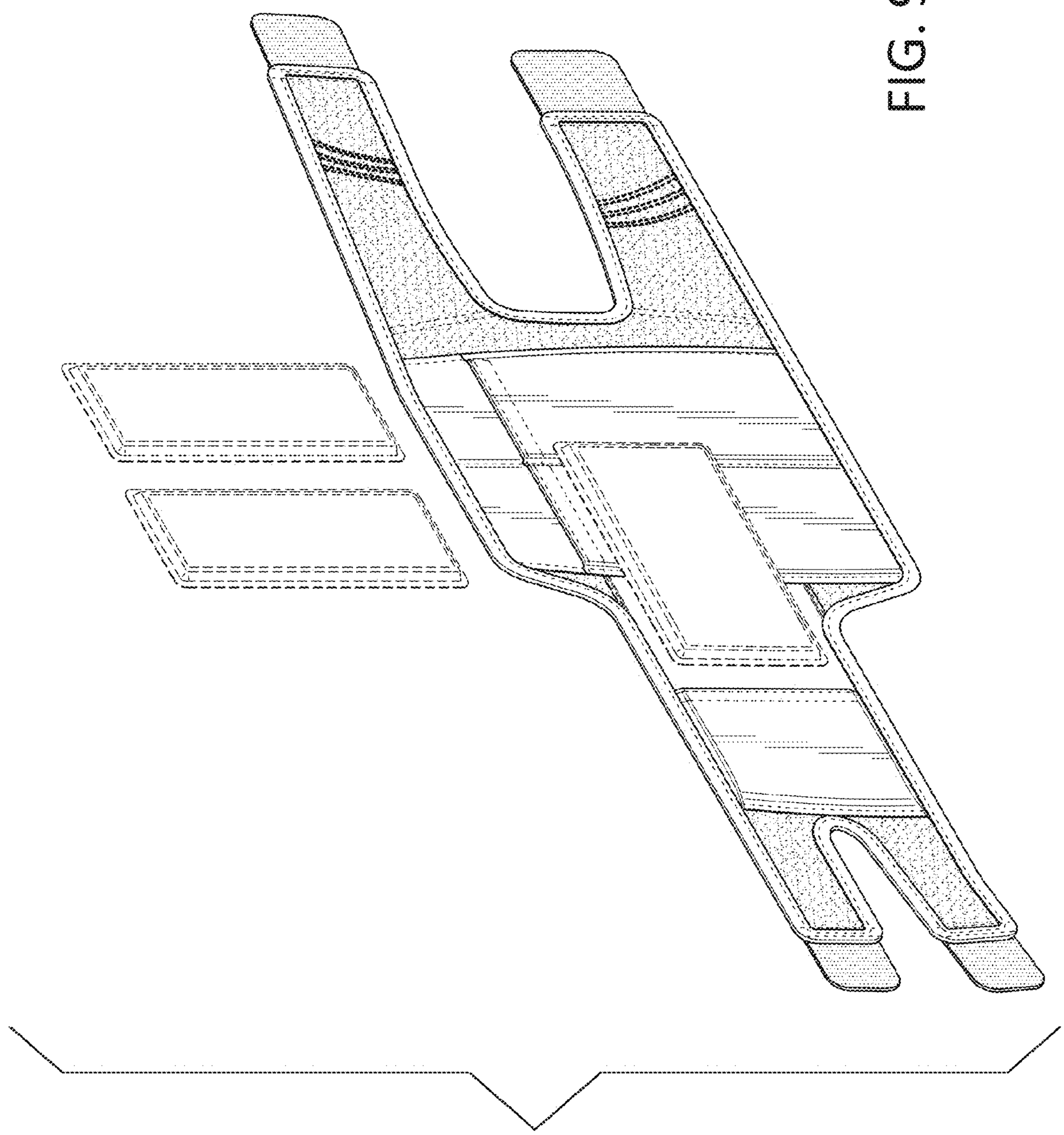

FIG. 9

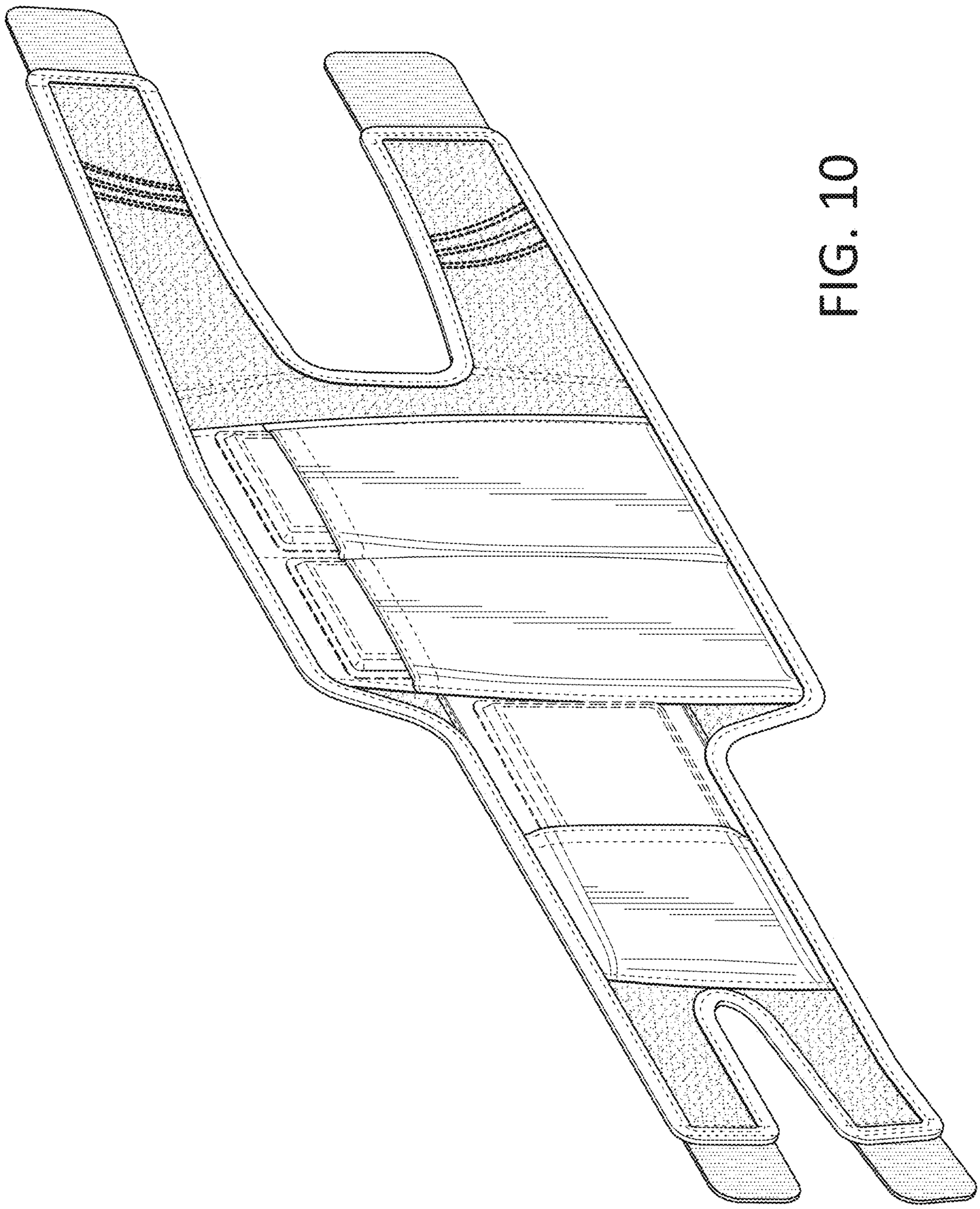

FIG. 10

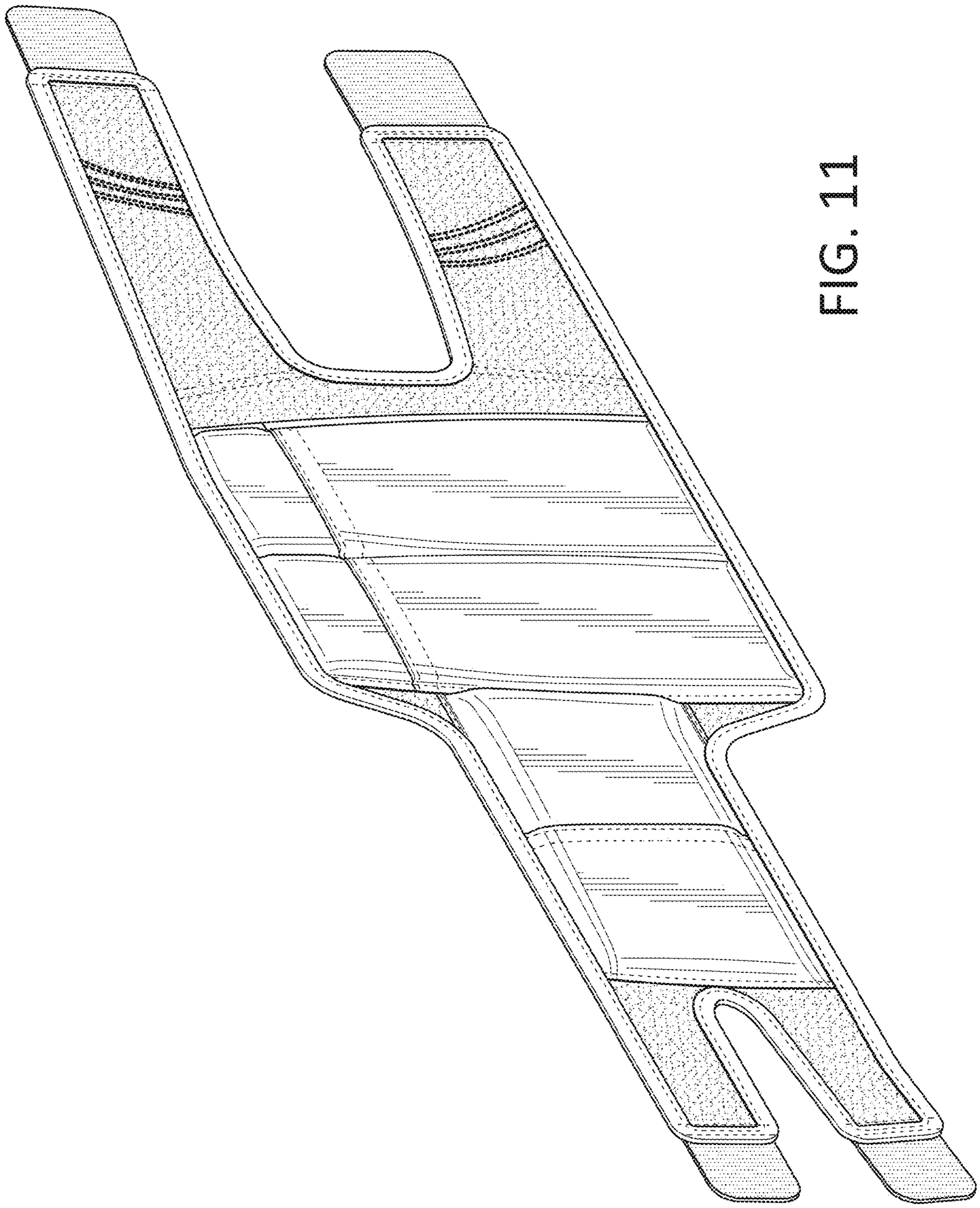

FIG. 11