US00D926978S

(12) United States Design Patent

Stoklund et al.

(10) Patent No.: US D926,978 S
(45) Date of Patent: ** Aug. 3, 2021

(54) **SURGICAL INSTRUMENT HANDLE**

(71) Applicant: **GetSet Surgical SA**, Epalinges (CH)

(72) Inventors: **Ole Stoklund**, Lausanne (CH); **Lawrence Binder**, Miami, FL (US); **John Kapitan**, Leicester, NC (US)

(73) Assignee: **GETSET SURGICAL SA**

(**) Term: **15 Years**

(21) Appl. No.: **29/694,193**

(22) Filed: **Jun. 7, 2019**

(51) **LOC (13) Cl.** **24-02**

(52) **U.S. Cl.**
USPC **D24/133**; D24/147

(58) **Field of Classification Search**
USPC D24/108, 112, 113, 114, 115, 116, 117, D24/127, 133, 134, 136, 137, 138, 143, D24/145, 200, 144, 147; D8/14, 16, 19, D8/21, 82, 83, 84, 85, 86, 107, 34, 300, D8/303, 314, 372, 374, 394, 77, 17, 22, D8/23, 24, 25, 26, 27, 28, 29, 52, 55, 81, D8/87, 102, 103, 104, 105, 106, 98, 99, D8/93, 94
CPC A61M 25/0136; A61B 17/00; A61B 17/62; A61B 17/64; A61B 17/645; A47J 43/26; B25B 13/463; B25B 13/468; B25B 15/04; B25B 1/00; B25G 1/005; B25G 1/085
See application file for complete search history.

(56) **References Cited**

U.S. PATENT DOCUMENTS

2,905,178	A	9/1959	Hilzinger
3,681,840	A	8/1972	Pool
3,703,843	A	11/1972	Laverty
RE28,111	E	8/1974	Laverty

(Continued)

FOREIGN PATENT DOCUMENTS

CN	204033456	U	12/2014
GB	2348390	B	10/2000

(Continued)

OTHER PUBLICATIONS

International Search Report dated Oct. 15, 2019 for corresponding International Application No. PCT/2019/044429.

(Continued)

Primary Examiner — T Chase Nelson
Assistant Examiner — Kelly L Gross
(74) *Attorney, Agent, or Firm* — David Meibos; Maywood IP Law

(57) **CLAIM**

The ornamental design for a surgical instrument handle, as shown and described.

DESCRIPTION

FIG. **1** is a front, left, and top isometric view of a surgical instrument handle.
FIG. **2** is a rear, right, and top isometric view of the surgical instrument handle.
FIG. **3** is a left elevation view of the surgical instrument handle.
FIG. **4** is a right elevation view of the surgical instrument handle.
FIG. **5** is a rear elevation view of the surgical instrument handle.
FIG. **6** is a front elevation view of the surgical instrument handle.
FIG. **7** is a top plan view of the surgical instrument handle; and,
FIG. **8** is a bottom plan view of the surgical instrument handle.
The broken lines are included for the purpose of illustrating the portions of the surgical instrument that form no part of the claimed design.

1 Claim, 5 Drawing Sheets

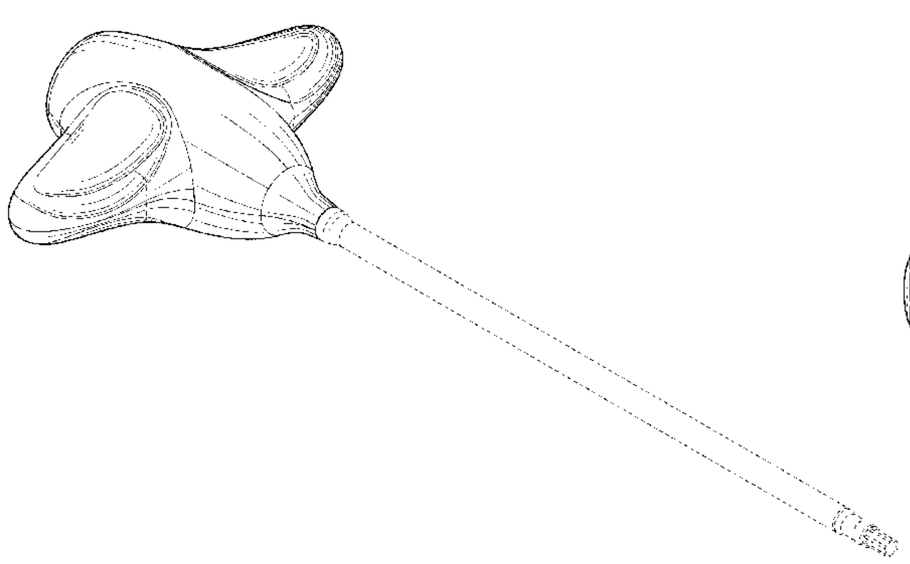

(56) **References Cited**

U.S. PATENT DOCUMENTS

3,861,269 A 1/1975 Laverty
D245,062 S * 7/1977 Grame D8/83
4,268,253 A 5/1981 Gross et al.
4,488,460 A * 12/1984 Ballone B25B 13/463 74/551.9
D319,561 S * 9/1991 Moses D8/14
D328,495 S * 8/1992 Ungari D24/187
5,246,442 A 9/1993 Ashman et al.
5,259,398 A 11/1993 Vrespa
5,269,686 A 12/1993 James
5,368,594 A 11/1994 Martin et al.
D356,239 S * 3/1995 Lin D8/82
D357,313 S * 4/1995 Wortrich D24/112
5,405,328 A 4/1995 Vidal et al.
D372,656 S * 8/1996 Nagano D8/303
5,593,410 A 1/1997 Vrespa
5,601,553 A 2/1997 Trebing et al.
5,672,176 A 9/1997 Biedermann et al.
D386,062 S * 11/1997 Quick D8/107
5,697,929 A 12/1997 Mellinger
D391,443 S * 3/1998 Candianides D7/393
5,728,098 A 3/1998 Sherman et al.
5,797,911 A 8/1998 Sherman et al.
D401,334 S * 11/1998 Herman D24/133
D403,766 S * 1/1999 Miller-Roach D24/115
5,879,350 A 3/1999 Sherman et al.
5,885,286 A 3/1999 Sherman et al.
5,989,250 A 11/1999 Wagner et al.
6,010,503 A 1/2000 Richelsoph et al.
D420,885 S * 2/2000 Lin D8/107
6,045,312 A 4/2000 Hsing
6,053,917 A 4/2000 Sherman et al.
6,179,841 B1 1/2001 Jackson
6,187,005 B1 2/2001 Brace et al.
6,193,719 B1 2/2001 Gournay et al.
6,216,570 B1 4/2001 Freed
6,254,602 B1 7/2001 Justis
6,257,105 B1 7/2001 Lin
6,261,296 B1 7/2001 Aebi et al.
6,273,888 B1 8/2001 Justis
6,296,642 B1 10/2001 Morrison et al.
6,478,795 B1 11/2002 Gournay et al.
6,562,040 B1 5/2003 Wagner
6,660,006 B2 12/2003 Markworth et al.
D486,723 S * 2/2004 Chang D8/21
6,712,825 B2 3/2004 Aebi et al.
6,743,233 B1 6/2004 Baldwin et al.
6,834,571 B1 12/2004 Lowe et al.
D515,802 S * 2/2006 Grierson D3/7
D517,634 S * 3/2006 Nunez D21/789
D530,588 S * 10/2006 Wang D8/107
D540,634 S * 4/2007 Mujwid D8/24
D544,602 S * 6/2007 Hughett, Sr. 24/114
D546,149 S * 7/2007 Chen D8/27
D565,380 S * 4/2008 Rinner D8/107
7,373,860 B1 * 5/2008 Rinner B25G 1/105 16/430
D573,256 S * 7/2008 Mauch D24/130
7,445,627 B2 11/2008 Hawkes et al.
7,476,226 B2 1/2009 Weikel et al.
7,476,239 B2 1/2009 Jackson
D586,634 S * 2/2009 Lai D8/21
D591,860 S * 5/2009 Aparici D24/133
D596,471 S * 7/2009 Huang D8/21
7,572,281 B2 8/2009 Runco et al.
D600,093 S * 9/2009 Lin D8/107
7,677,891 B2 3/2010 Niznick
D613,139 S * 4/2010 Lai D8/21
D614,005 S * 4/2010 Miller D8/24
D614,006 S * 4/2010 Miller D8/24
D614,819 S * 4/2010 Lin D30/159
D617,163 S * 6/2010 Miller D8/24
D620,339 S * 7/2010 Pennington D8/107
D621,562 S * 8/2010 Marshall D30/153
7,794,477 B2 9/2010 Melkent et al.
7,828,829 B2 11/2010 Ensign
D632,157 S * 2/2011 Le D8/306
D633,959 S * 3/2011 Mastin D21/568
D634,844 S * 3/2011 Bast D24/145
D639,941 S * 6/2011 Porat D24/133
D646,384 S * 10/2011 Gauthier D24/133
D646,386 S * 10/2011 Miller D24/133
D646,387 S * 10/2011 Bast D24/133
D646,783 S * 10/2011 Bast D24/133
D646,948 S * 10/2011 Robinson D8/83
8,029,285 B2 10/2011 Holmen et al.
D648,433 S * 11/2011 Bast D24/133
D649,423 S * 11/2011 Robinson D8/83
D649,635 S * 11/2011 Cronin D24/133
8,088,163 B1 1/2012 Kleiner
D654,589 S * 2/2012 Bast B25G 1/105 D24/133
8,114,104 B2 * 2/2012 Young G10K 11/24 606/169
D663,025 S * 7/2012 Bast D24/133
8,226,656 B2 7/2012 McBride
8,235,997 B2 8/2012 Hoffman et al.
8,241,294 B2 8/2012 Sommerich et al.
D667,111 S * 9/2012 Robinson D24/133
D667,710 S * 9/2012 Fossum D8/21
D668,761 S * 10/2012 Schad D24/133
D668,921 S * 10/2012 Fossum D8/21
D673,831 S * 1/2013 Molina D8/83
D673,832 S * 1/2013 Molina D8/83
8,347,824 B2 * 1/2013 Marshall A01K 27/004 119/794
D679,165 S * 4/2013 Plehn-Citrone D8/83
D680,647 S * 4/2013 Carter D24/146
D681,822 S * 5/2013 Shinohara B25B 13/463 D24/186
8,608,651 B2 12/2013 Shluzas
8,668,699 B2 3/2014 Thomas et al.
8,685,029 B2 4/2014 Dziedzic et al.
D711,708 S * 8/2014 Larson C09J 5/00 D8/21
8,828,060 B2 9/2014 Biedermann et al.
D715,931 S * 10/2014 Watanabe D24/130
8,900,240 B2 12/2014 White et al.
8,920,424 B2 12/2014 Boykin
8,968,367 B2 3/2015 Kretzer et al.
8,986,307 B2 3/2015 Kirschman
9,050,062 B1 6/2015 Gauthier et al.
9,078,679 B2 7/2015 Schuele et al.
9,084,642 B2 7/2015 Peultier
D735,855 S * 8/2015 Kimball D24/144
9,132,536 B2 * 9/2015 Nino C09J 5/00
9,168,058 B2 10/2015 Duperier et al.
9,198,695 B2 12/2015 Shluzas et al.
9,295,500 B2 3/2016 Marigowda
D756,662 S * 5/2016 Lambertson, Jr. D4/138
9,339,319 B2 5/2016 Schmuck et al.
9,345,587 B2 5/2016 Mitchell
9,393,039 B2 7/2016 Lechner et al.
D767,353 S * 9/2016 Miller D8/24
9,446,507 B2 9/2016 Nino et al.
9,463,063 B2 10/2016 Seddon et al.
9,532,814 B2 1/2017 Harper
9,572,617 B1 2/2017 Prado et al.
9,630,301 B2 * 4/2017 Ryans B25B 13/463
RE46,409 E 5/2017 Foley et al.
D787,755 S * 5/2017 Porter D30/159
9,649,140 B1 5/2017 Doose et al.
9,693,814 B2 7/2017 Schaller et al.
D796,280 S * 9/2017 Godoy D8/21
D799,302 S * 10/2017 Bast D8/107
D806,492 S * 1/2018 Willhite D8/40
D820,671 S * 6/2018 Yu G10K 11/24 D8/387
D820,985 S * 6/2018 McLean A61C 5/62 D24/152
D825,298 S * 8/2018 Stalter D8/21
D825,300 S * 8/2018 Stalter D8/21
D826,014 S * 8/2018 Stalter D8/21
D837,368 S * 1/2019 Burkholz D24/129

(56) **References Cited**

U.S. PATENT DOCUMENTS

D839,066	S	*	1/2019	Bast	A01K 27/004 D8/14
D845,740	S	*	4/2019	Bast	D8/107
D859,969	S	*	9/2019	Yu	D8/387
D877,581	S	*	3/2020	Skillings	D8/25
D877,902	S	*	3/2020	Troli	D24/130
D879,952	S	*	3/2020	Schneider	D24/112
D880,972	S	*	4/2020	Bast	D8/107
D880,973	S	*	4/2020	Bast	D8/107
D880,974	S	*	4/2020	Bast	D8/107
D881,494	S	*	4/2020	Harrington	D32/52
D883,480	S	*	5/2020	Leibowitz	D24/133
D883,777	S	*	5/2020	Yu	D8/387
D887,232	S	*	6/2020	Holloway	D8/21
D887,561	S	*	6/2020	Cheng	D24/187
D889,225	S	*	7/2020	Brown	D8/44
D904,606	S	*	12/2020	Gloess	D24/133
D910,168	S		2/2021	Sussman	
D910,408	S		2/2021	Lin	
D911,140	S		2/2021	Hyma et al.	
D911,141	S		2/2021	Panosian et al.	
2002/0091386	A1		7/2002	Martin et al.	
2002/0138076	A1		9/2002	Biedermann et al.	
2003/0060714	A1		3/2003	Henderson et al.	
2003/0125741	A1		7/2003	Biedermann et al.	
2004/0082956	A1		4/2004	Baldwin et al.	
2004/0181224	A1		9/2004	Biedermann et al.	
2006/0149241	A1		7/2006	Richelsoph et al.	
2006/0241599	A1		10/2006	Konieczynski et al.	
2007/0213737	A1		9/2007	Schermerhorn et al.	
2008/0015584	A1		1/2008	Richelsoph	
2008/0027544	A1		1/2008	Melkent	
2008/0065219	A1		3/2008	Dye	
2009/0018591	A1		1/2009	Hawkes et al.	
2009/0054991	A1		2/2009	Biyani et al.	
2009/0234395	A1		9/2009	Hoffman et al.	
2009/0259234	A1		10/2009	Waller	
2010/0137879	A1		6/2010	Ko et al.	
2010/0241175	A1		9/2010	Walker et al.	
2010/0288087	A1	*	11/2010	Lai	B25G 1/085 81/490
2011/0046637	A1		2/2011	Patel et al.	
2011/0077694	A1		3/2011	Biedermann et al.	
2011/0208238	A1		8/2011	Hoffman	
2011/0213424	A1		9/2011	Biedermann et al.	
2011/0313471	A1		12/2011	McLean et al.	
2012/0143224	A1		6/2012	Chan	
2012/0143265	A1		6/2012	Biedermann et al.	
2013/0096568	A1		4/2013	Justis	
2013/0096618	A1		4/2013	Chandanson et al.	
2013/0103102	A1		4/2013	Taylor et al.	
2013/0123923	A1		5/2013	Pavlov et al.	
2013/0253517	A1		9/2013	Mitchell et al.	
2013/0253518	A1		9/2013	Mitchell et al.	
2013/0253519	A1		9/2013	Mitchell et al.	
2013/0253594	A1		9/2013	Zucherman et al.	
2013/0253595	A1		9/2013	Zucherman et al.	
2013/0261626	A1		10/2013	Chavarria et al.	
2014/0025119	A1		1/2014	Biedermann et al.	
2014/0031880	A1		1/2014	Biedermann et al.	
2014/0058465	A1		2/2014	Nichols et al.	
2014/0277212	A1		9/2014	Dauster	
2015/0148835	A1		5/2015	Faller et al.	
2015/0265271	A1		9/2015	Galligan et al.	
2016/0030188	A1		2/2016	Lynn et al.	
2016/0175060	A1		6/2016	Park	
2016/0296344	A1		10/2016	Greenhalgh et al.	

FOREIGN PATENT DOCUMENTS

WO	WO2007038654	4/2007
WO	WO2009015100	1/2009
WO	WO2009040840	4/2009
WO	WO2016073912	5/2016

OTHER PUBLICATIONS

International Search Report dated Oct. 15, 2019 for corresponding International Application No. PCT/2019/044456.

* cited by examiner

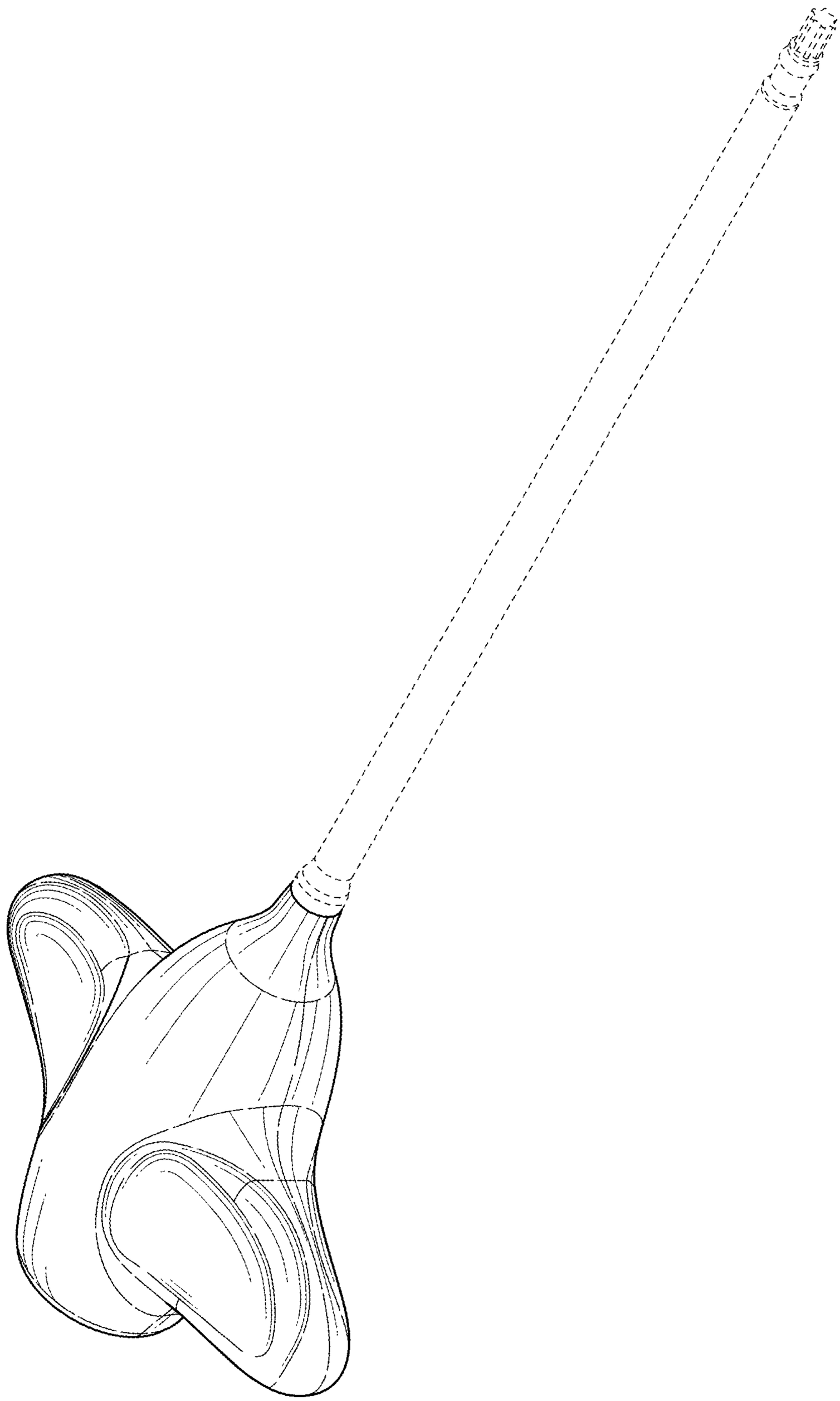

FIG. 1

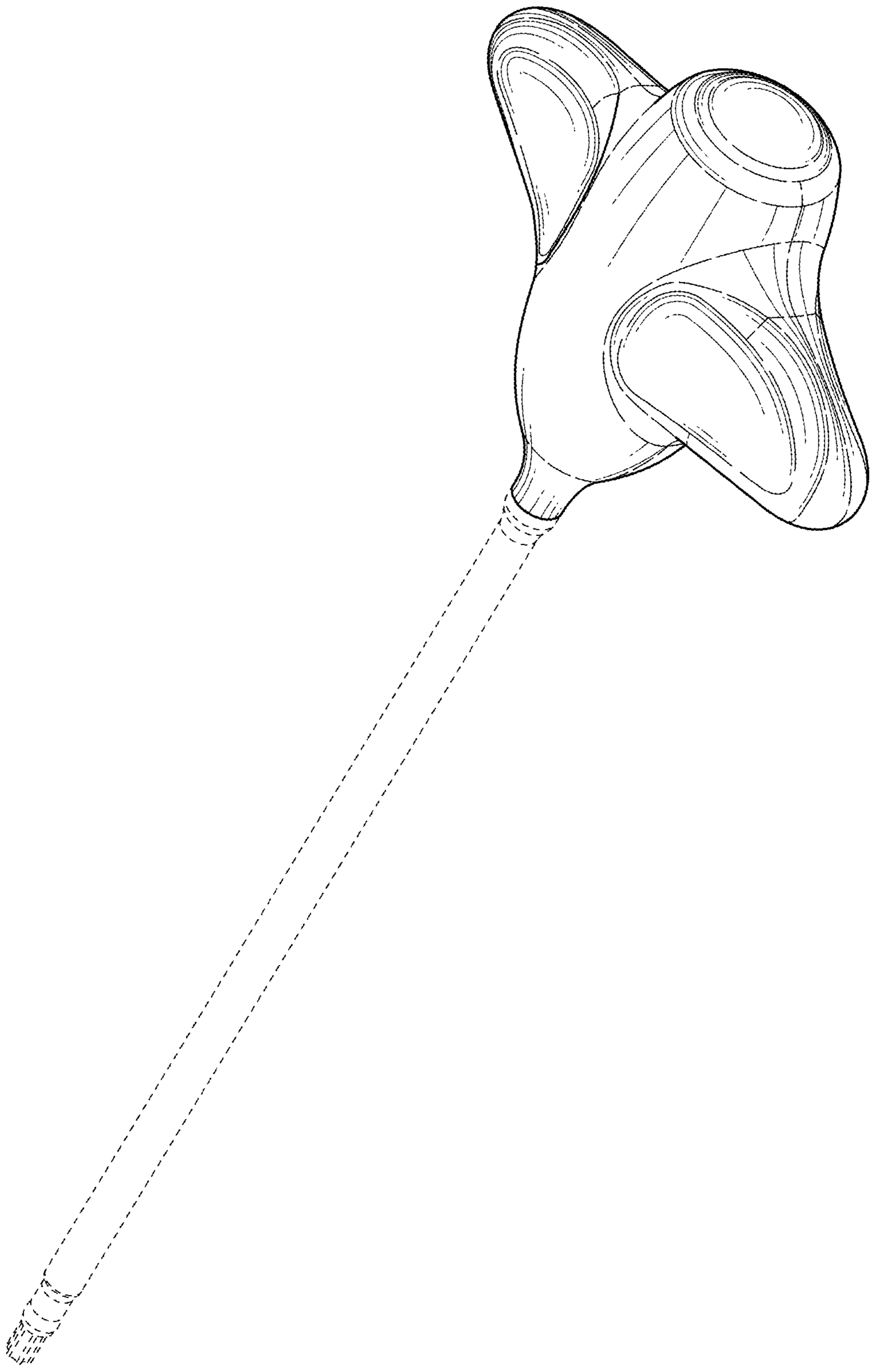

FIG. 2

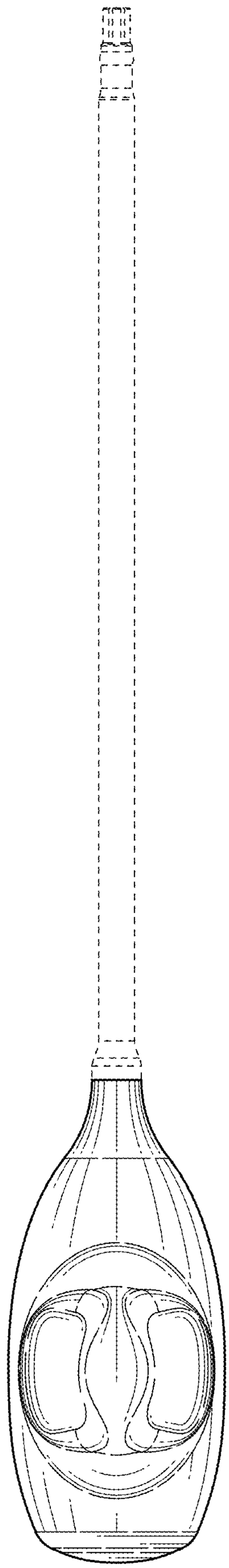

FIG. 3

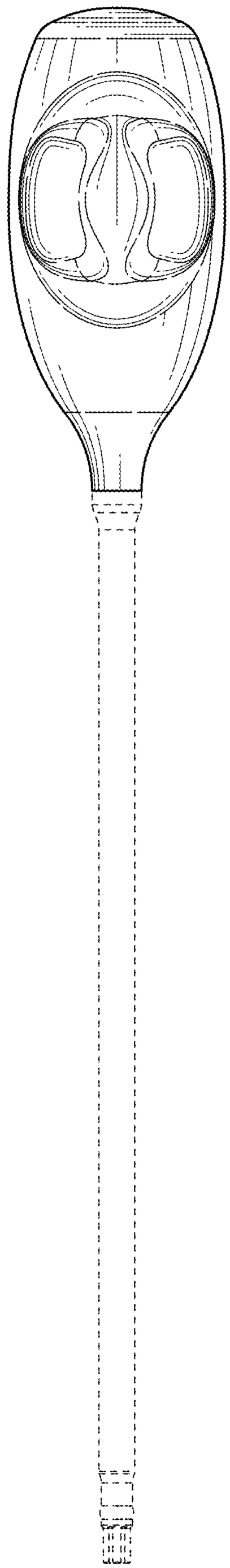

FIG. 4

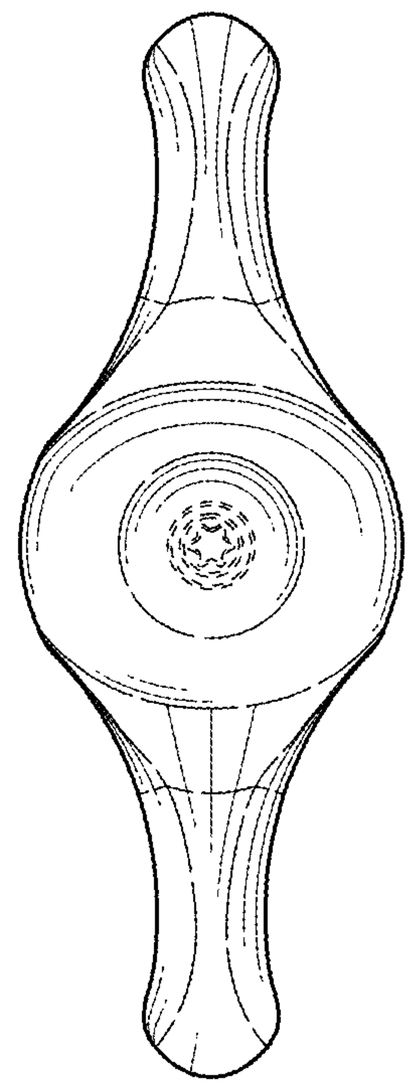

FIG. 6

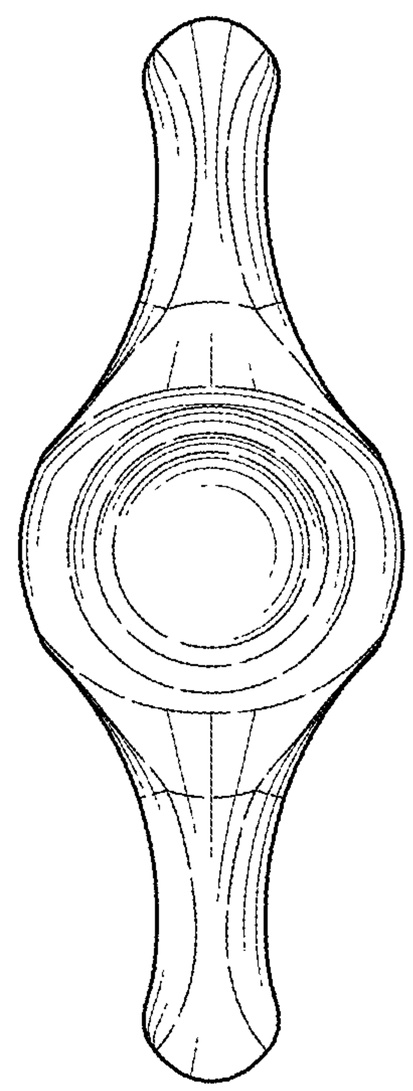

FIG. 5

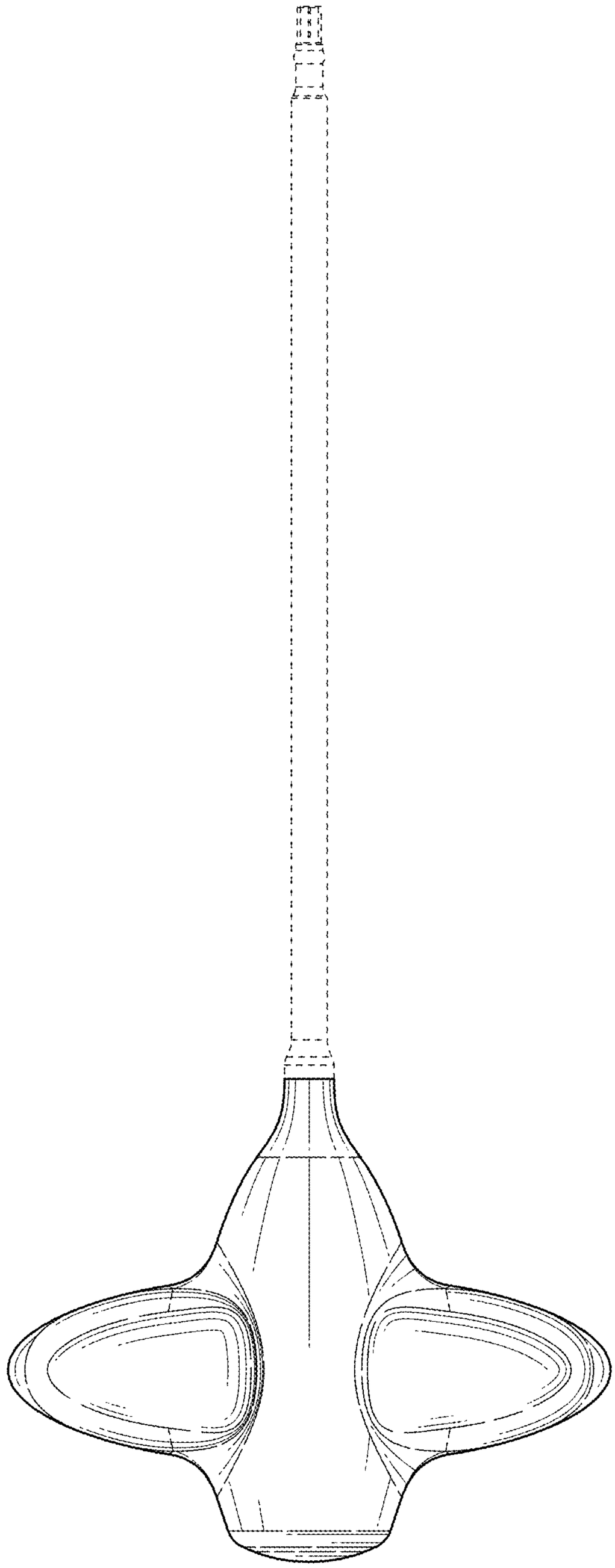

FIG. 7

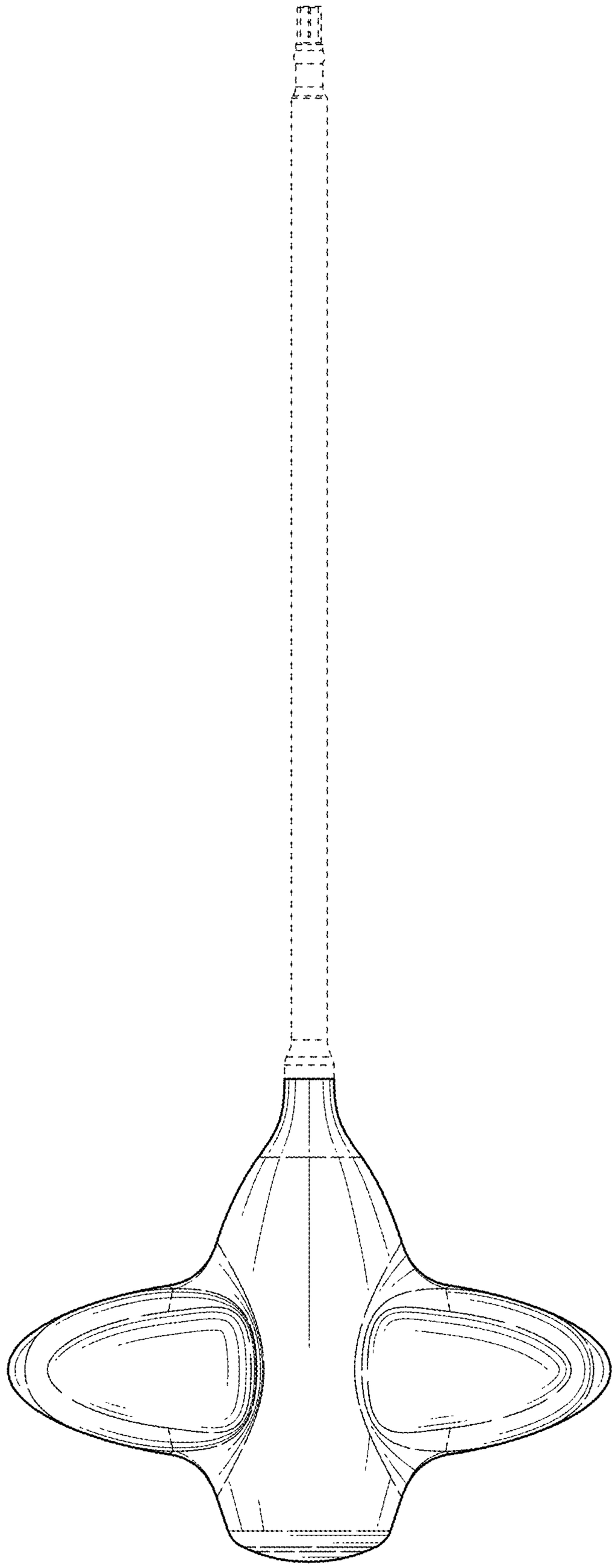

FIG. 8