US00D926890S

(12) United States Design Patent

Lu

(10) Patent No.: US D926,890 S
(45) Date of Patent: ** Aug. 3, 2021

(54) **ELECTRIC SCOOTER**

(71) Applicant: **ZHEJIANG OKAI VEHICLE CO., LTD.**, Lishui (CN)

(72) Inventor: **Jiangtao Lu**, Lishui (CN)

(73) Assignee: **Zhejiang Okai Vehicle Co., Ltd.**, Lishui (CN)

(**) Term: **15 Years**

(21) Appl. No.: **29/667,502**

(22) Filed: **Oct. 22, 2018**

(30) **Foreign Application Priority Data**

Jul. 20, 2018 (CN) 201830394177.3

(51) **LOC (13) Cl.** **21-01**

(52) **U.S. Cl.**
USPC **D21/423**

(58) **Field of Classification Search**
USPC D21/419, 421, 423, 426–428, 435, 760, D21/765, 771, 432, 763; D12/1, 8, 108, D12/112, 113, 110
CPC . B62K 3/002; B62K 9/00; B62K 9/02; B62K 13/00; B62K 2202/00; B62K 11/00; B62K 11/02; B62K 11/06; B62K 11/10; B62K 15/00; B62K 17/00; B62K 2015/001; B62K 2015/003; H04W 4/40; B60Y 2200/126
See application file for complete search history.

(56) **References Cited**

U.S. PATENT DOCUMENTS

7,976,035 B2 * 7/2011 Chan B62K 15/00 280/87.05
D654,963 S * 2/2012 Powers D21/423
D692,963 S * 11/2013 Radtke D21/423
D717,881 S * 11/2014 Radtke D21/423
D806,176 S * 12/2017 Peng D21/423
D815,215 S * 4/2018 Desberg D21/423
D834,097 S * 11/2018 Lin D21/423
D837,303 S * 1/2019 Desberg D21/423
D839,358 S * 1/2019 Cao D21/423
D855,115 S * 7/2019 Yan D21/423
2013/0087983 A1* 4/2013 Ngai B60B 19/00 280/87.041
2017/0240239 A1* 8/2017 Huang B62K 3/002
2019/0263468 A1* 8/2019 Huang B62K 3/002

* cited by examiner

Primary Examiner — Cynthia M. Chin
(74) *Attorney, Agent, or Firm* — Schwegman Lundberg & Woessner, P.A.

(57) **CLAIM**

The ornamental design for an electric scooter, as shown and described.

DESCRIPTION

FIG. **1** is a perspective view of an electric scooter;
FIG. **2** is a front view thereof;
FIG. **3** is a rear view thereof;
FIG. **4** is a left side view thereof;
FIG. **5** is a right side view thereof;
FIG. **6** is a top view thereof; and,
FIG. **7** is a bottom view thereof.
The portions of the electric scooter shown in broken lines form no part of the claimed design.

1 Claim, 5 Drawing Sheets

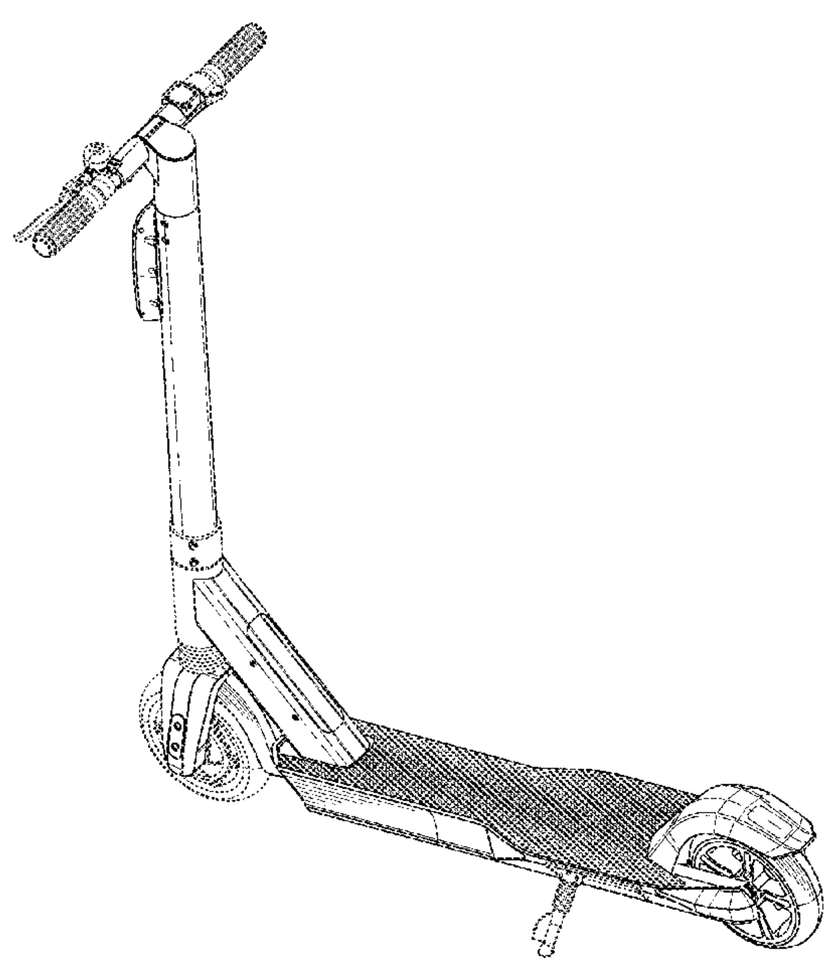

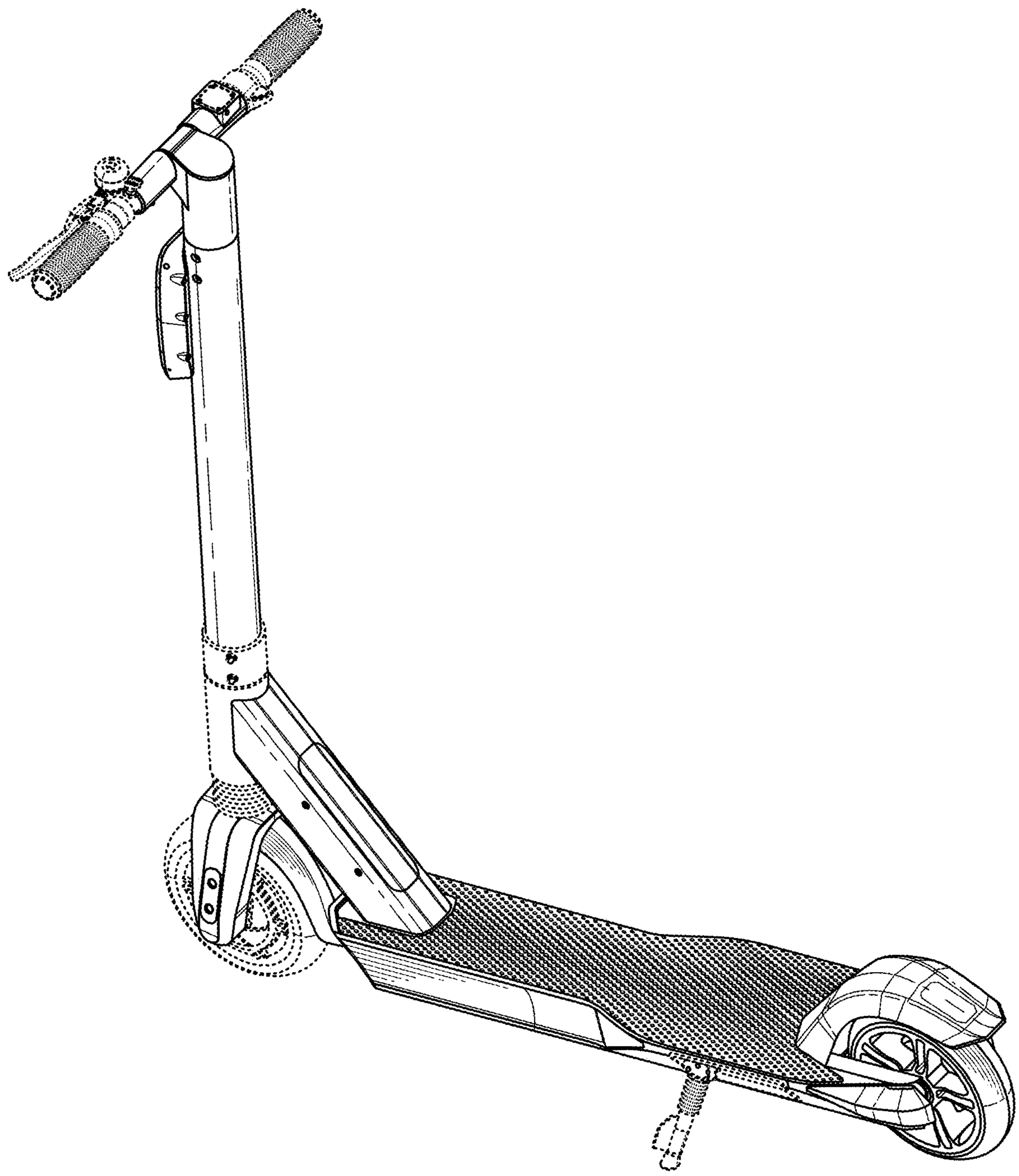

FIG. 1

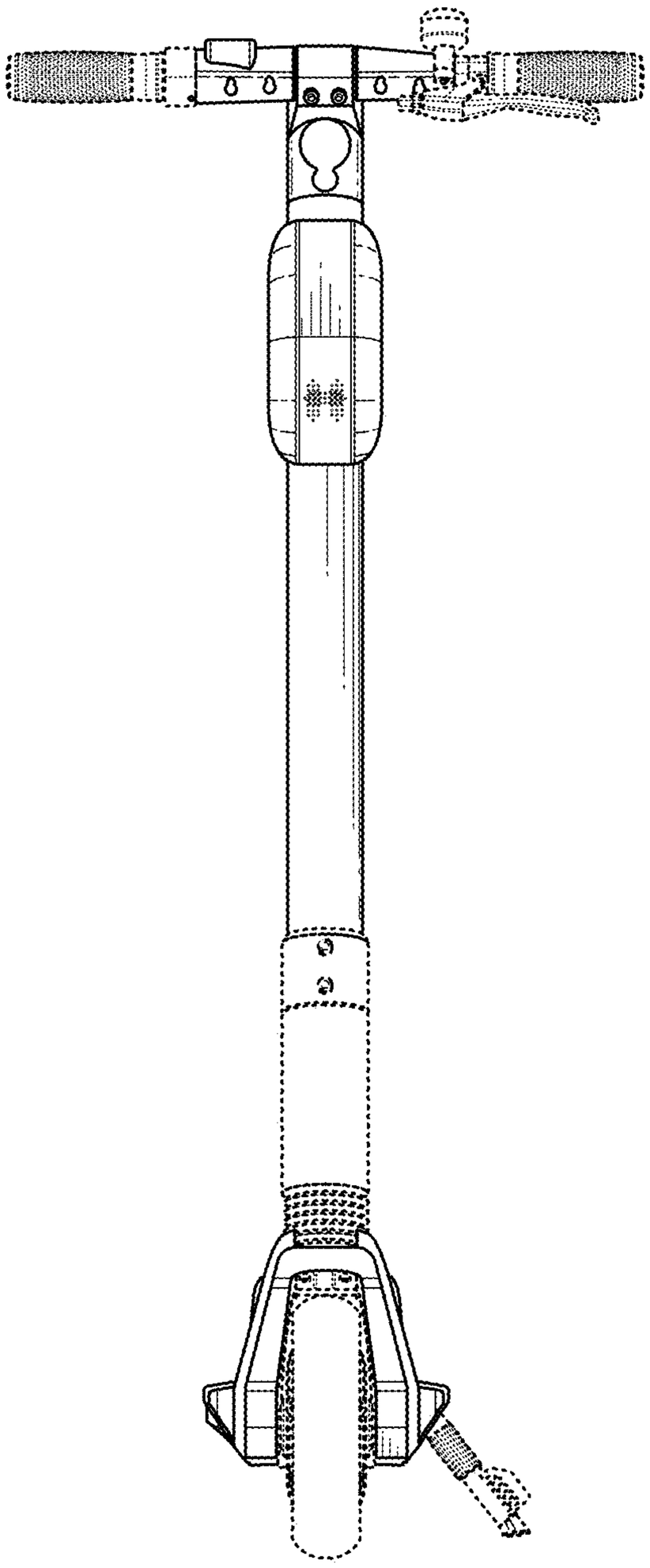

FIG. 2

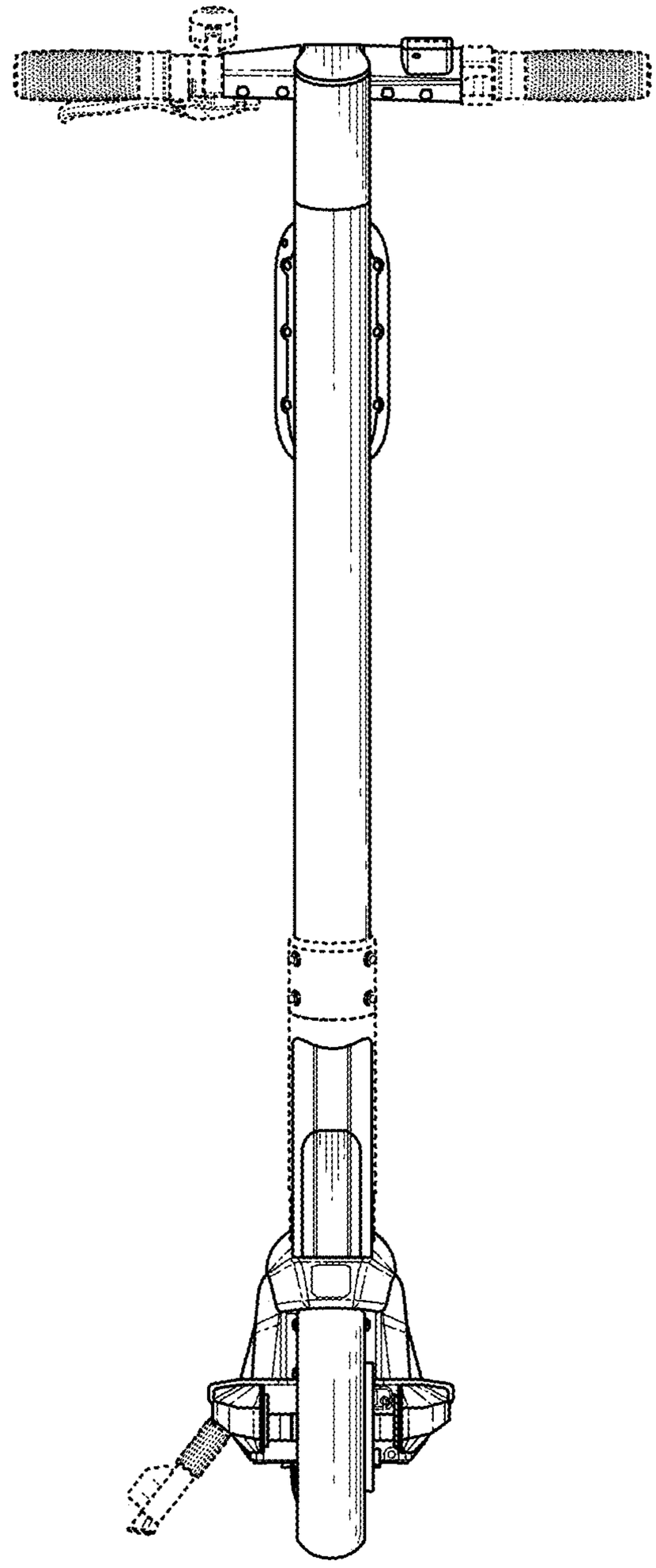

FIG. 3

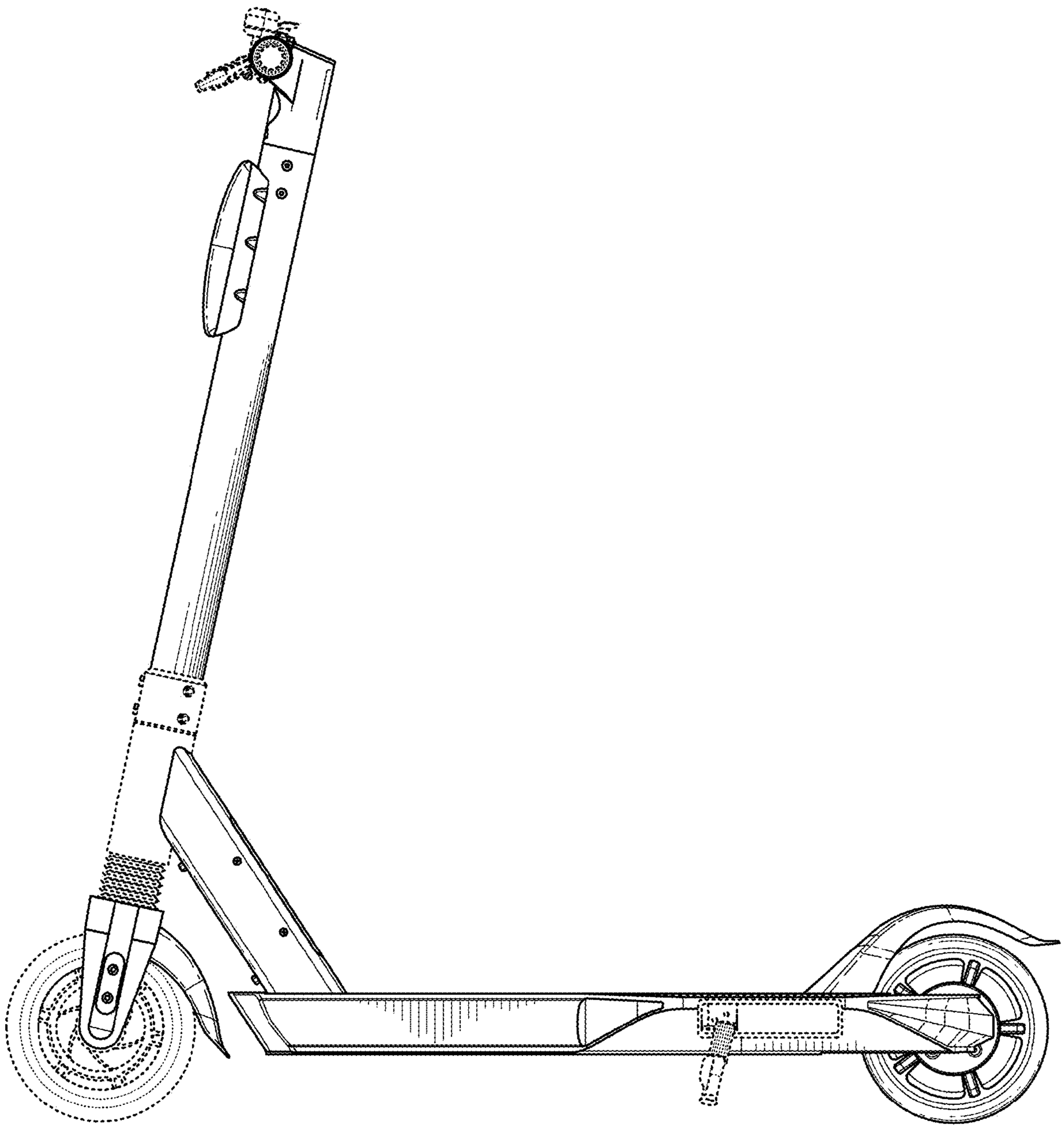

FIG. 4

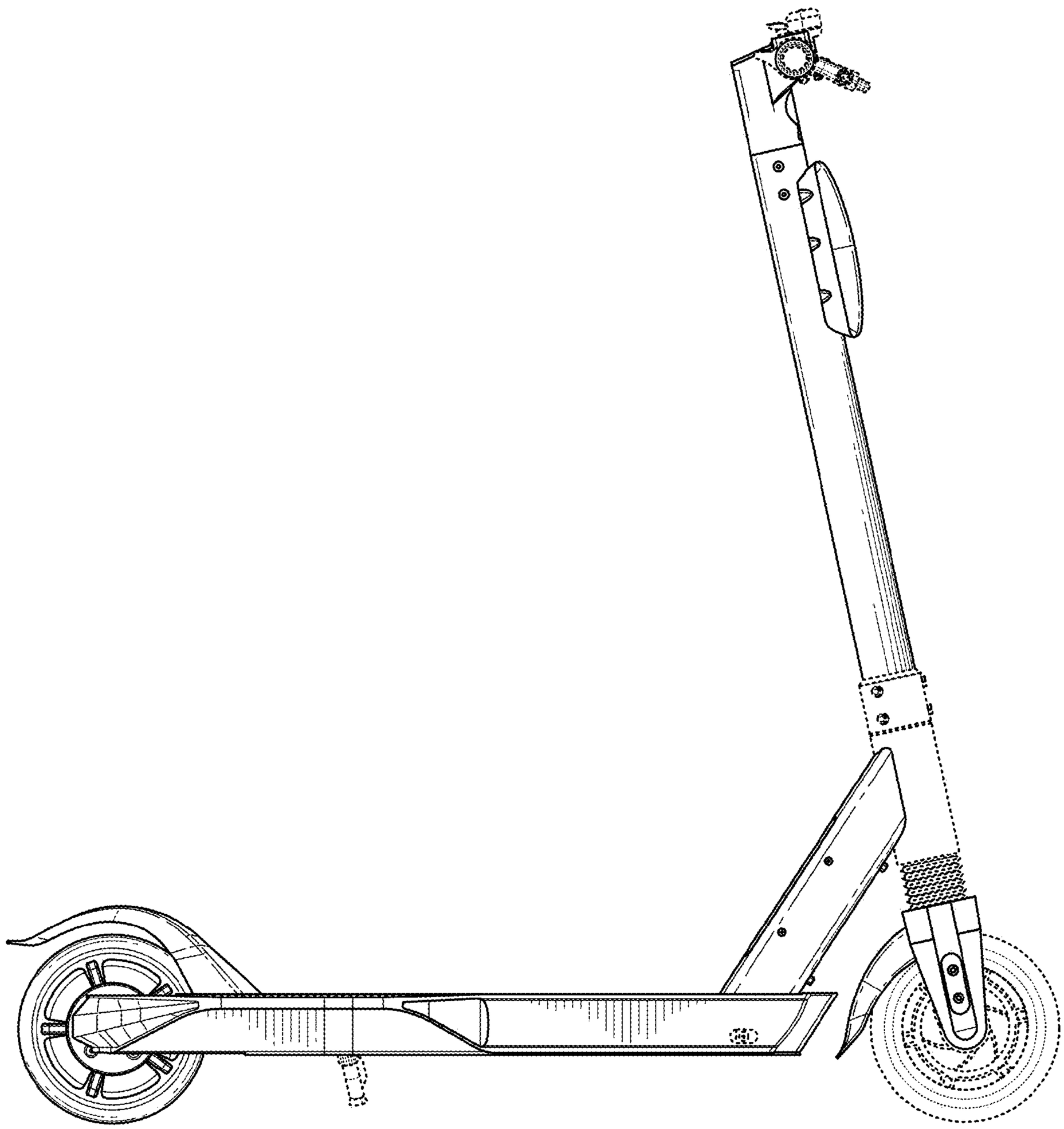

FIG. 5

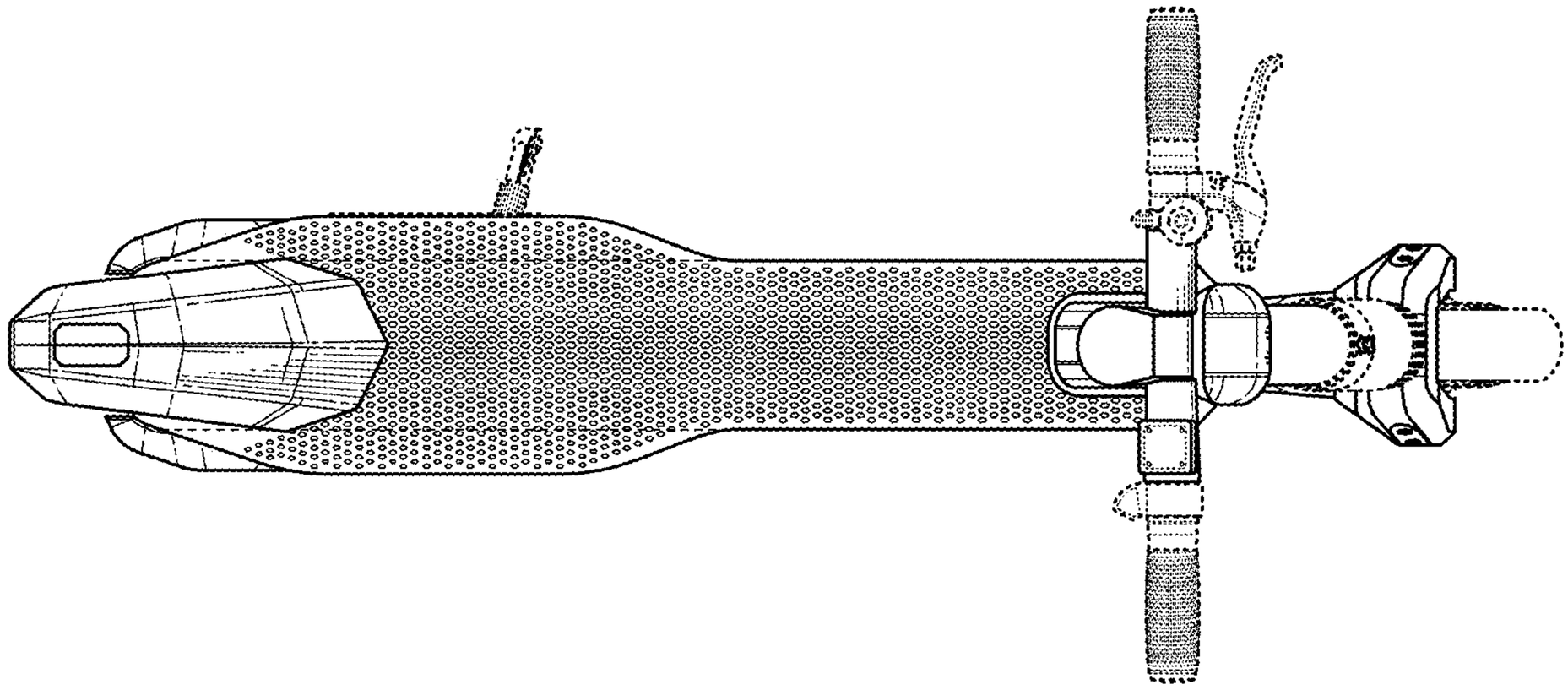

FIG. 6

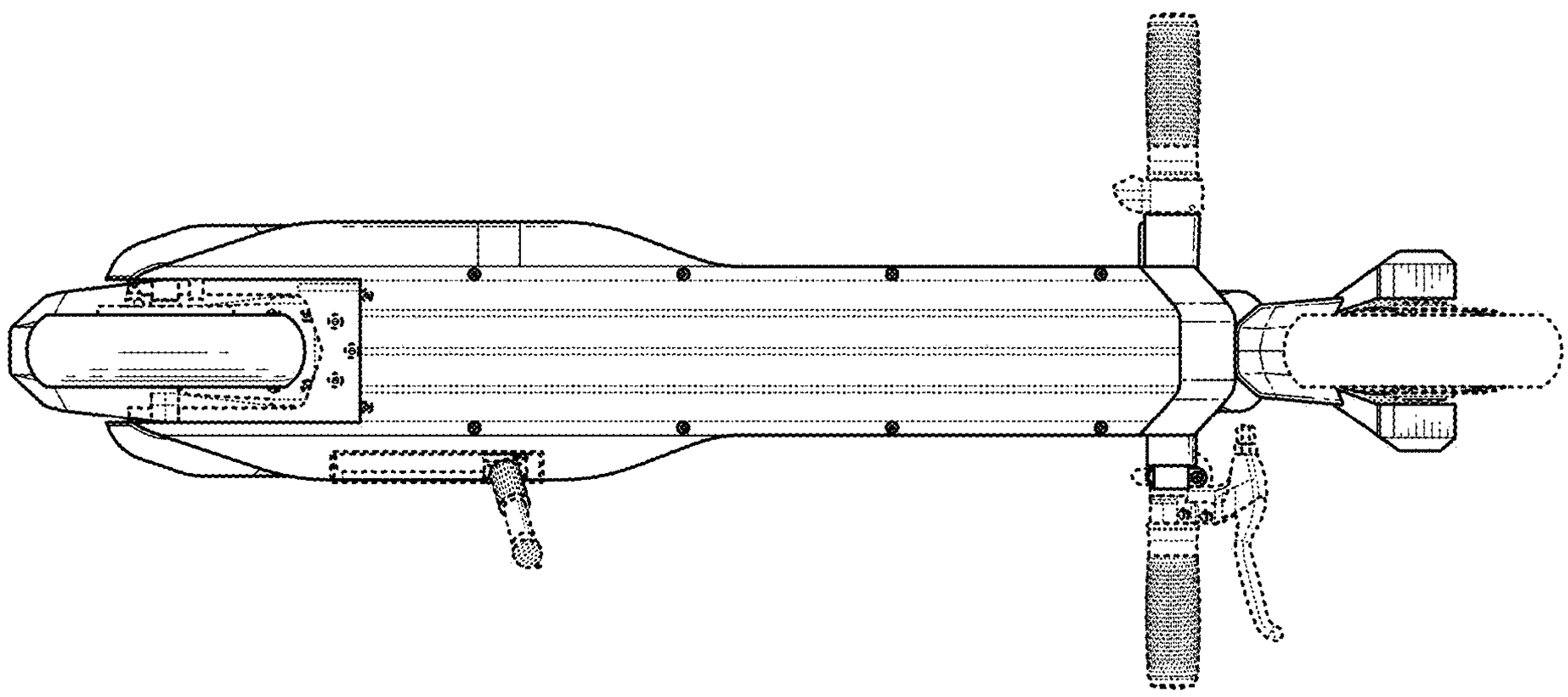

FIG. 7