US00D922910S

(12) United States Design Patent

Monahan

(10) Patent No.: US D922,910 S
(45) Date of Patent: ** Jun. 22, 2021

(54) **PAIR OF AXLE MOUNTED PEDAL STRAPS**

(71) Applicant: **James Patrick Monahan**, Denver, CO (US)

(72) Inventor: **James Patrick Monahan**, Denver, CO (US)

(**) Term: **15 Years**

(21) Appl. No.: **29/665,430**

(22) Filed: **Oct. 3, 2018**

Related U.S. Application Data

(60) Provisional application No. 62/567,764, filed on Oct. 4, 2017.

(51) **LOC (13) Cl.** **12-11**

(52) **U.S. Cl.**
USPC **D12/125**

(58) **Field of Classification Search**
USPC D2/189, 624, 627, 639, 900, 916–918, D2/943, 946, 969, 974, 976; D3/218;
(Continued)

(56) **References Cited**

U.S. PATENT DOCUMENTS

3,842,688 A * 10/1974 Baginski B62M 3/083 74/594.6
3,960,027 A 6/1976 Magnuson
(Continued)

FOREIGN PATENT DOCUMENTS

KR 101514315 9/2013
KR 20150026351 9/2013

OTHER PUBLICATIONS

Garmin Vector 3.
(Continued)

Primary Examiner — Darlington Ly
(74) *Attorney, Agent, or Firm* — Patricia C. Brzostowicz; Superior Patent Group, LLC

(57) **CLAIM**

The ornamental design for a pair of axle mounted pedal straps, as shown and described.

DESCRIPTION

This design application is co-pending with utility application Ser. No. 16/150,671 filed Oct. 3, 2018, which is incorporated herein by reference in its entirety.

FIG. **1** is a front perspective view of a pair of axle mounted pedal straps fitted to pedals shown with dotted lines;
FIG. **2** is a top plan view of the left member of my new design;
FIG. **3** is a bottom plan view of the right member of my new design;
FIG. **4** is a right side elevation view of the right member of my new design;
FIG. **5** is a left side elevation view of the right member of my new design;
FIG. **6** is a front elevation view of the right member of my new design;
FIG. **7** is a rear elevation view of the right member of my new design;
FIG. **8** is a rear top perspective view of the right member of my new design with a pedal shown in dots;
FIG. **9** is a rear top perspective view of the right member of my new design without the pedal;
FIG. **10** is a rear elevation view of the right member of my new design;
FIG. **11** is a left side elevation view of the right member of my new design;
FIG. **12** is a bottom plan view of the right member of my new design;
FIG. **13** is a top plan view of the right member of my new design with pedal shown in dotted lines;
FIG. **14** is a bottom plan view of the left member of my new design with pedal shown in dotted lines;
FIG. **15** is a right side elevation view of the left member of my new design with pedal shown in dotted lines;
FIG. **16** is a left side elevation view of the left member of my new design with pedal shown in dotted lines;
FIG. **17** is a front elevation view of the left member of my new design with pedal shown in dotted lines;
(Continued)

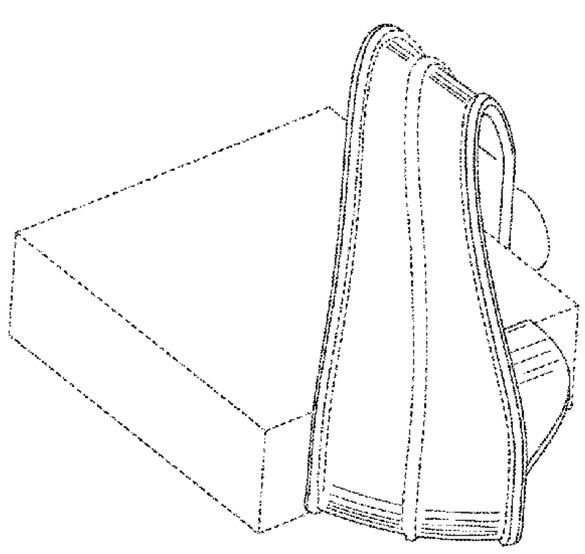

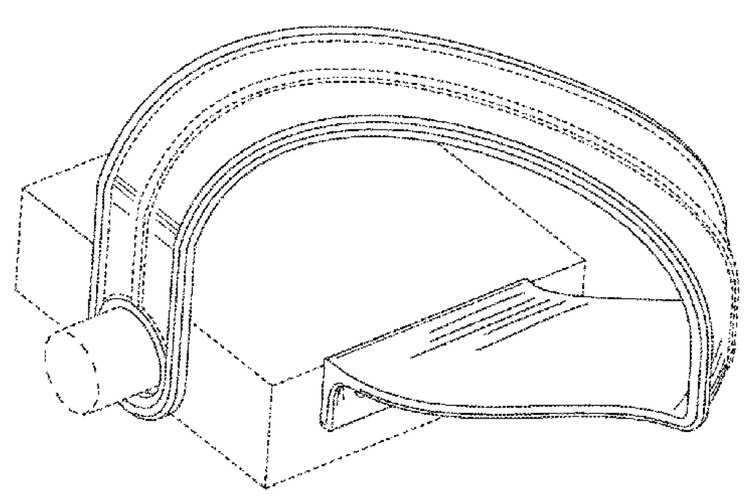

FIG. **18** is a rear elevation view of the left member of my new design;

FIG. **19** is a rear top perspective view of the left member of my new design with pedal shown in dotted lines;

FIG. **20** is a rear top perspective view of the left member without the pedal;

FIG. **21** is a rear elevation view of the left member of my new design without the pedal;

FIG. **22** is a left side elevation view of the left member of my new design without the pedal; and,

FIG. **23** is a bottom plan view of the left member of my new design without the pedal.

The broken lines in the drawings illustrate portions of the pedal straps and environmental pedals, axles, and mounting holes that form no part of the claimed design.

1 Claim, 13 Drawing Sheets

(58) **Field of Classification Search**

USPC D12/111–113, 125; D21/683; D24/189, D24/190, 191, 200, 206

CPC B62M 3/086; A43B 5/14; A43C 11/14

See application file for complete search history.

(56) **References Cited**

U.S. PATENT DOCUMENTS

4,200,005	A	*	4/1980	Mohr	B62M 3/083 74/594.6
D275,846	S	*	10/1984	Buchanan, Jr.	D12/125
4,547,983	A	*	10/1985	Brandt	A43B 5/14 36/113
4,599,914	A		7/1986	Dunn	
D302,259	S	*	7/1989	Konzorr	D12/125
4,856,211	A	*	8/1989	Phillips	A43B 5/14 36/131
4,870,873	A	*	10/1989	Tackles	A43B 5/14 74/594.6
4,953,425	A		9/1990	Barefoot	
5,078,026	A		1/1992	Giffin	
5,097,687	A	*	3/1992	Turrin	B62M 3/083 24/535
D365,923	S	*	1/1996	Crowley	D2/974
D615,285	S	*	5/2010	Martin	D2/946
D671,039	S	*	11/2012	Deng	D12/125
2002/0189395	A1	*	12/2002	Vito	B62M 3/083 74/594.6
2012/0192459	A1	*	8/2012	Aderonke	A43C 11/24 36/136

OTHER PUBLICATIONS

Power Grips Pedal Kit.
Fitnesspartswholesale.com.
Utility U.S. Appl. No. 16/150,671, filed Oct. 3, 2018. Inventor James Patrick Monahan.

* cited by examiner

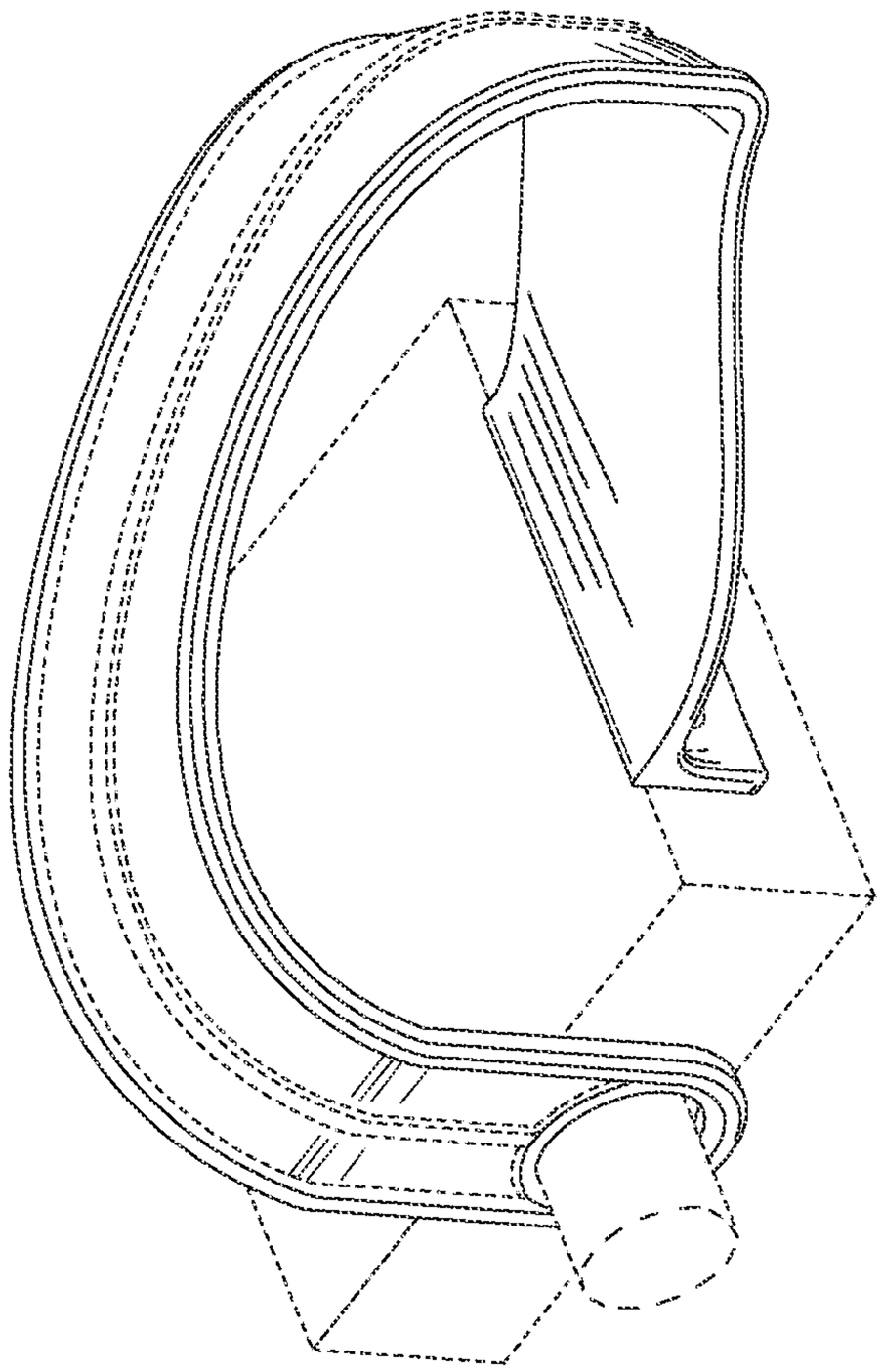

Fig. 1

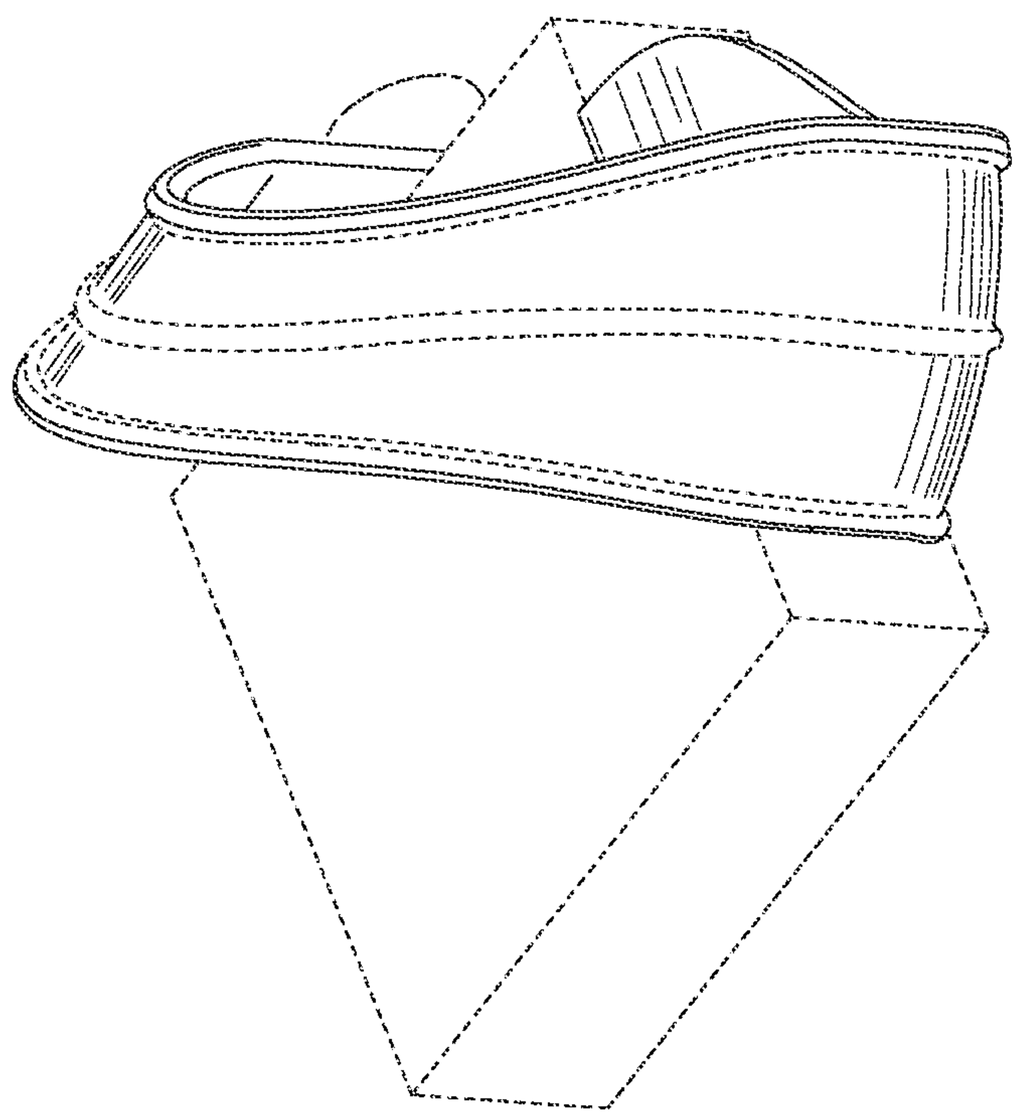

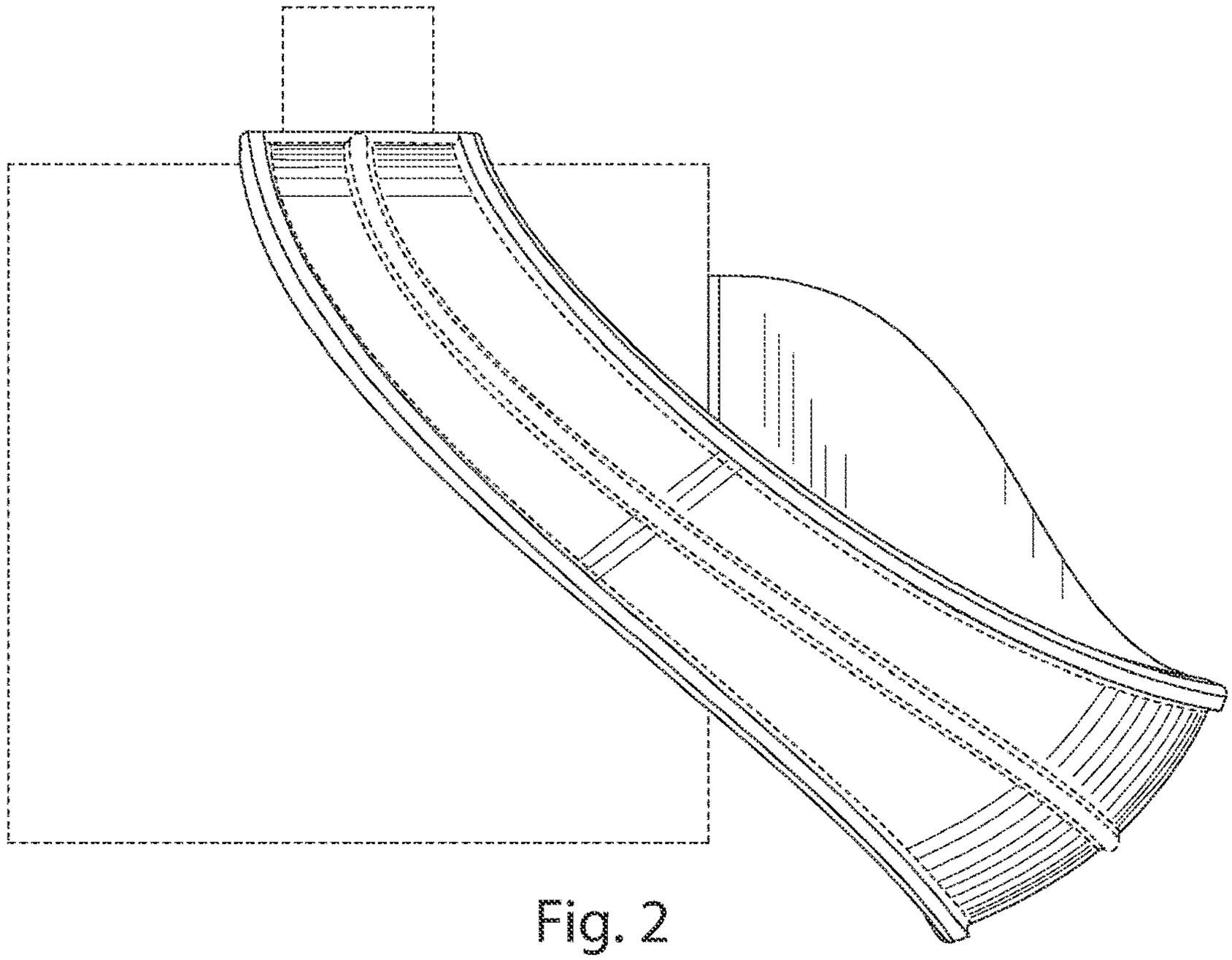

Fig. 2

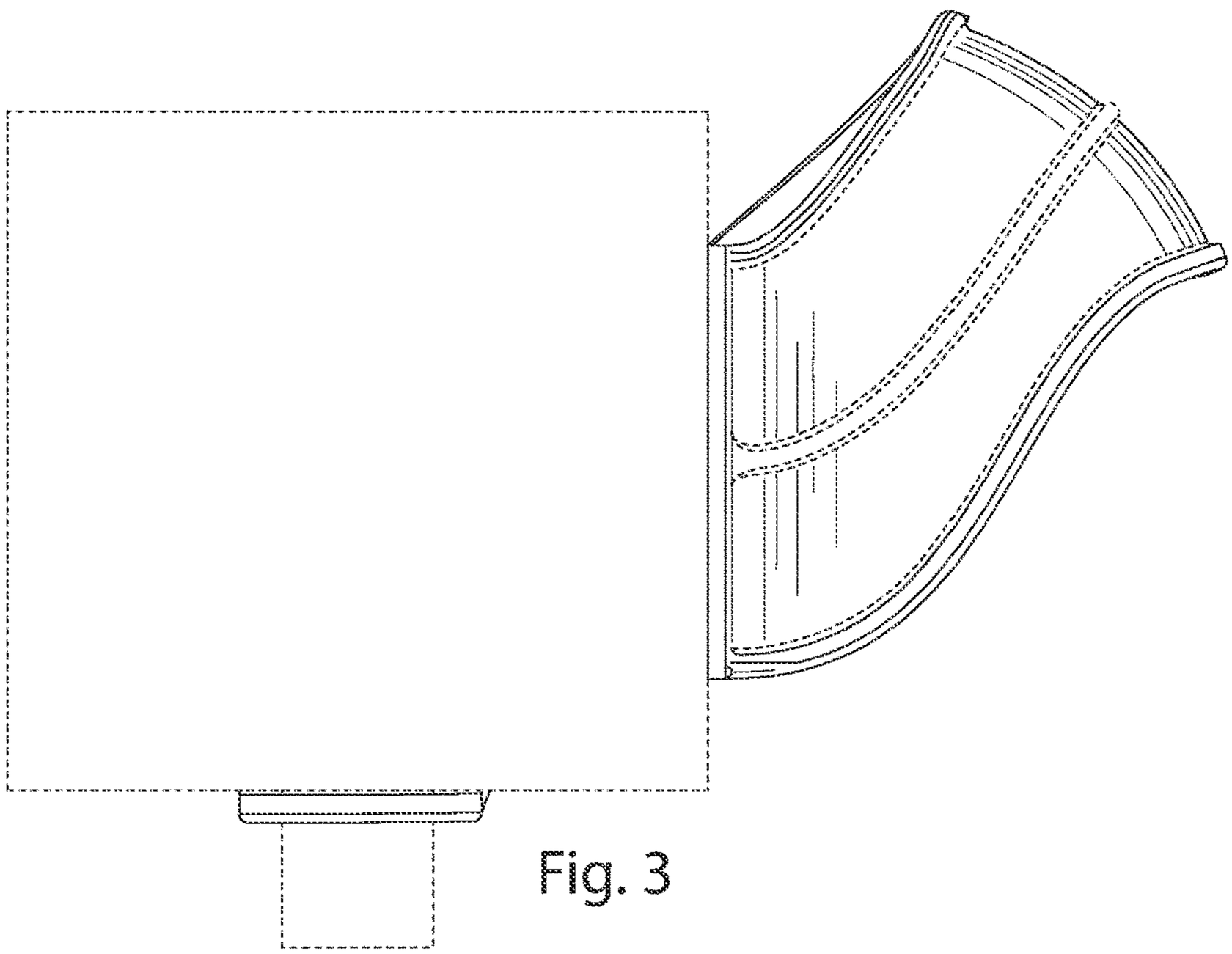

Fig. 3

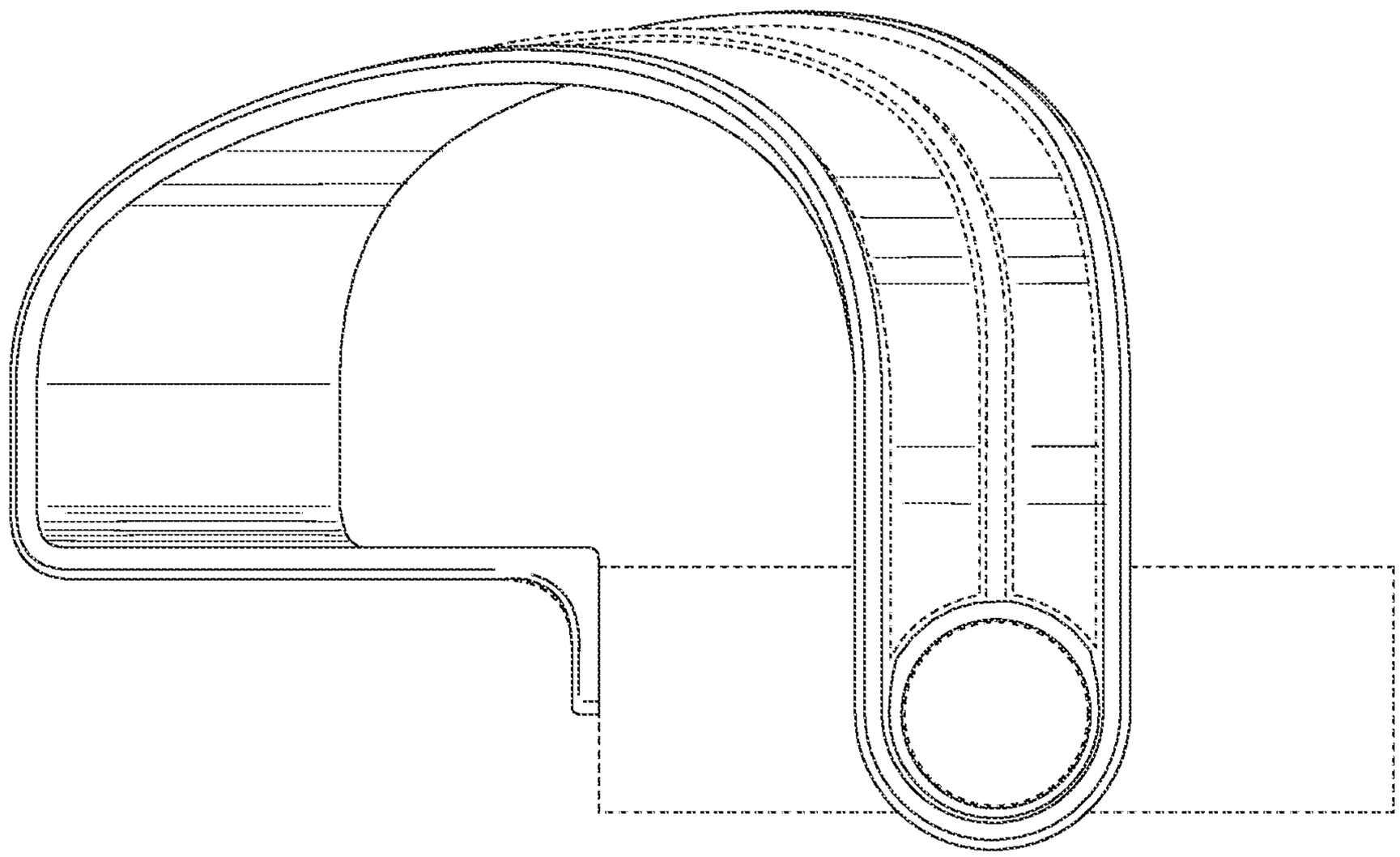

Fig. 4

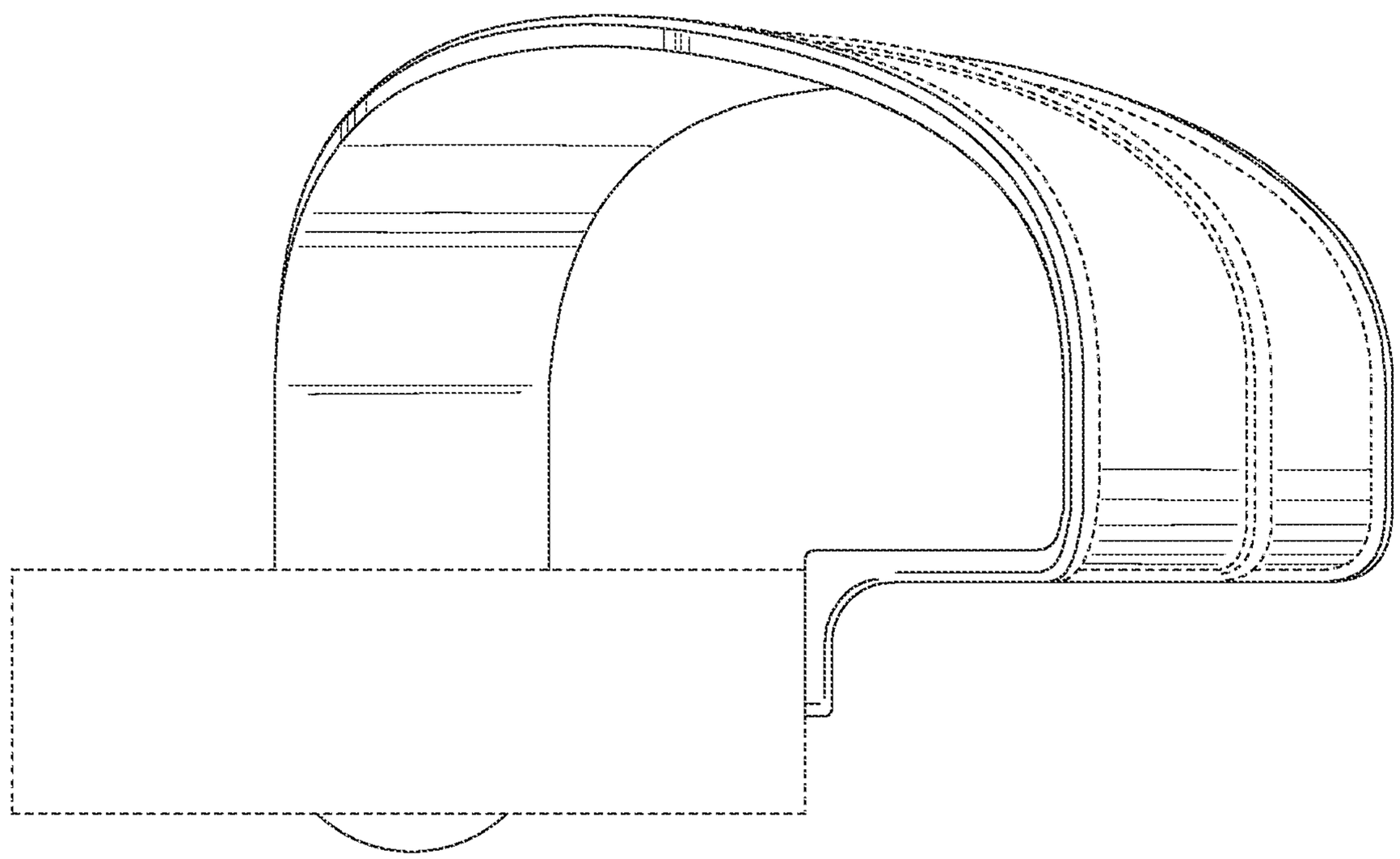

Fig. 5

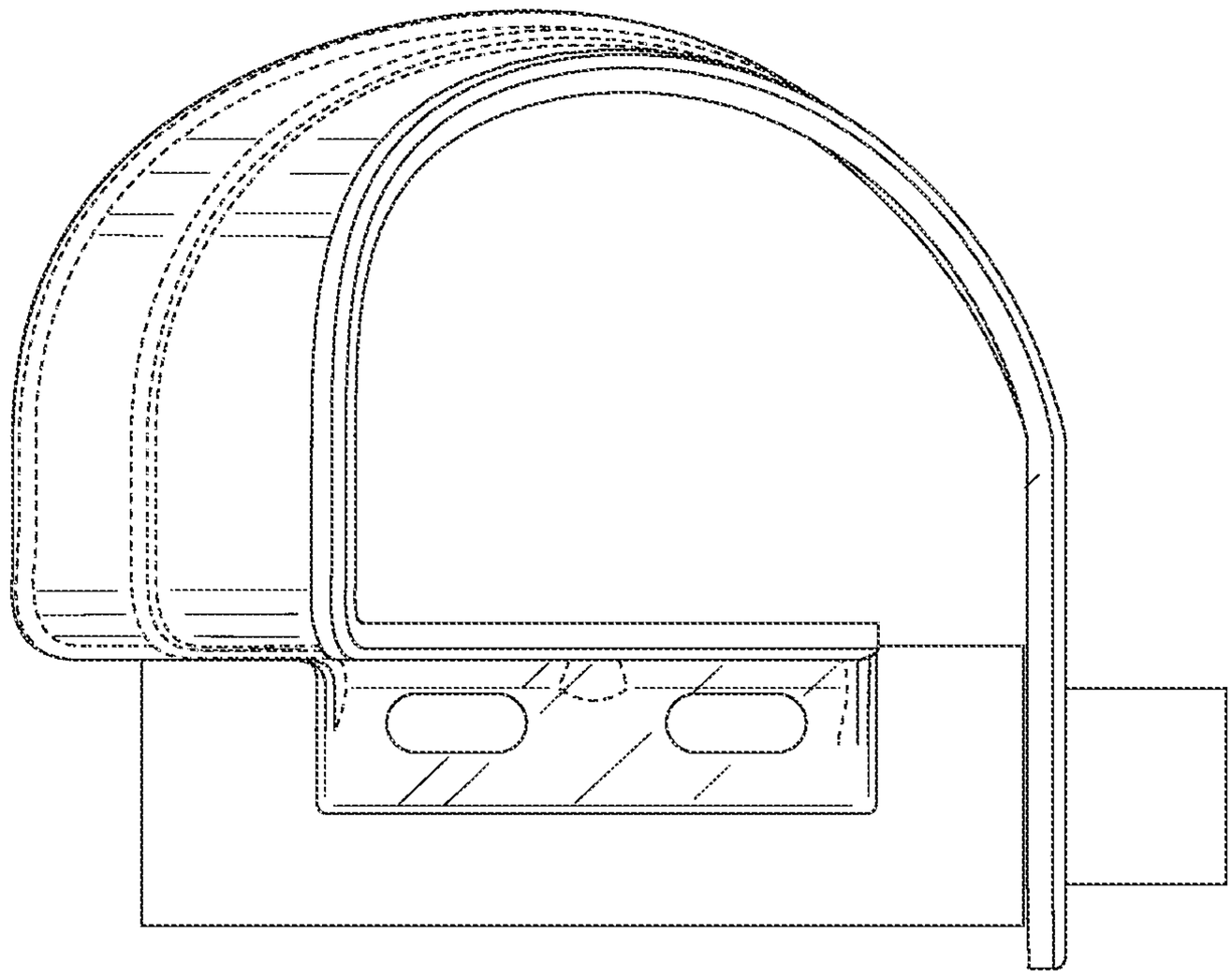

Fig. 6

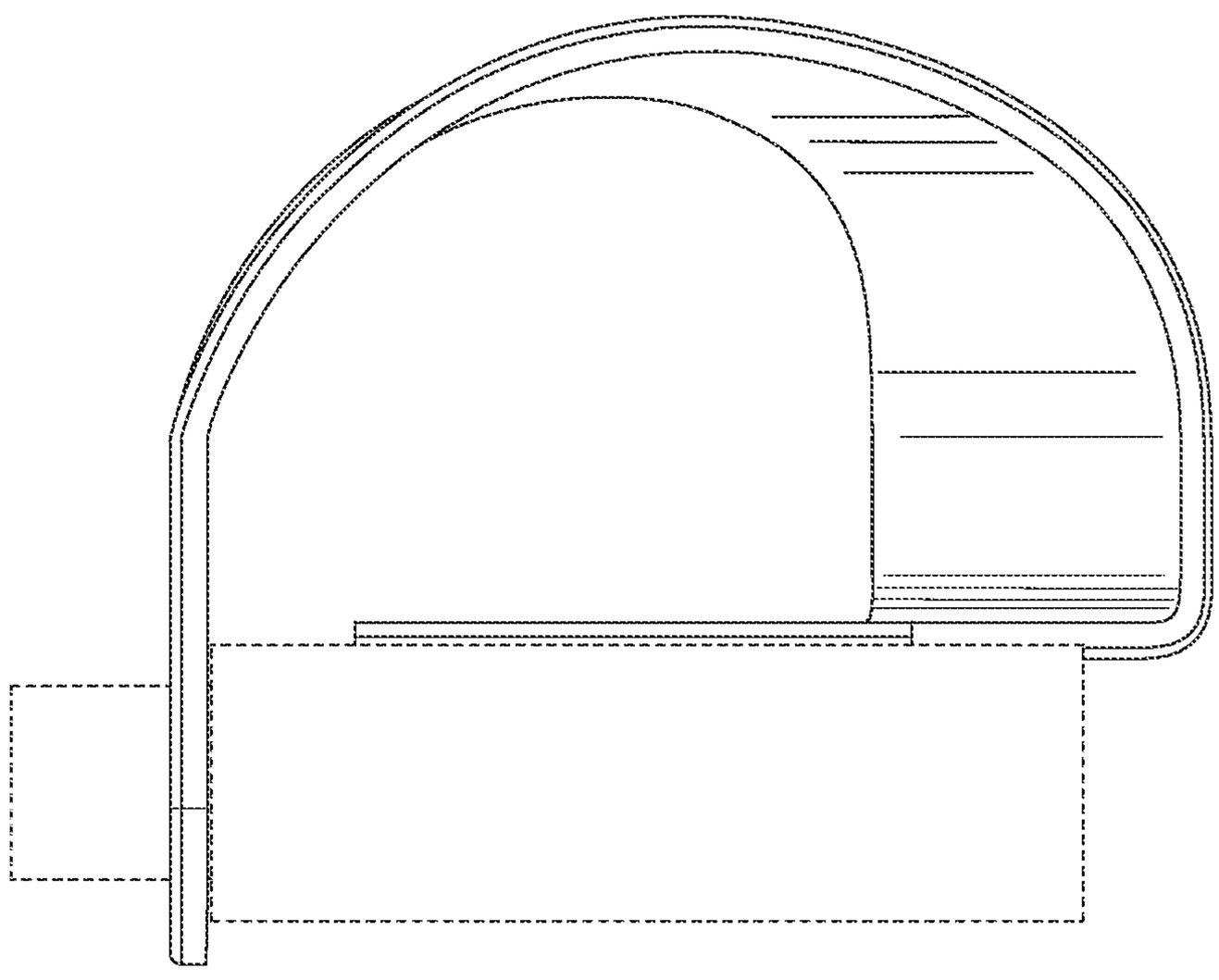

Fig. 7

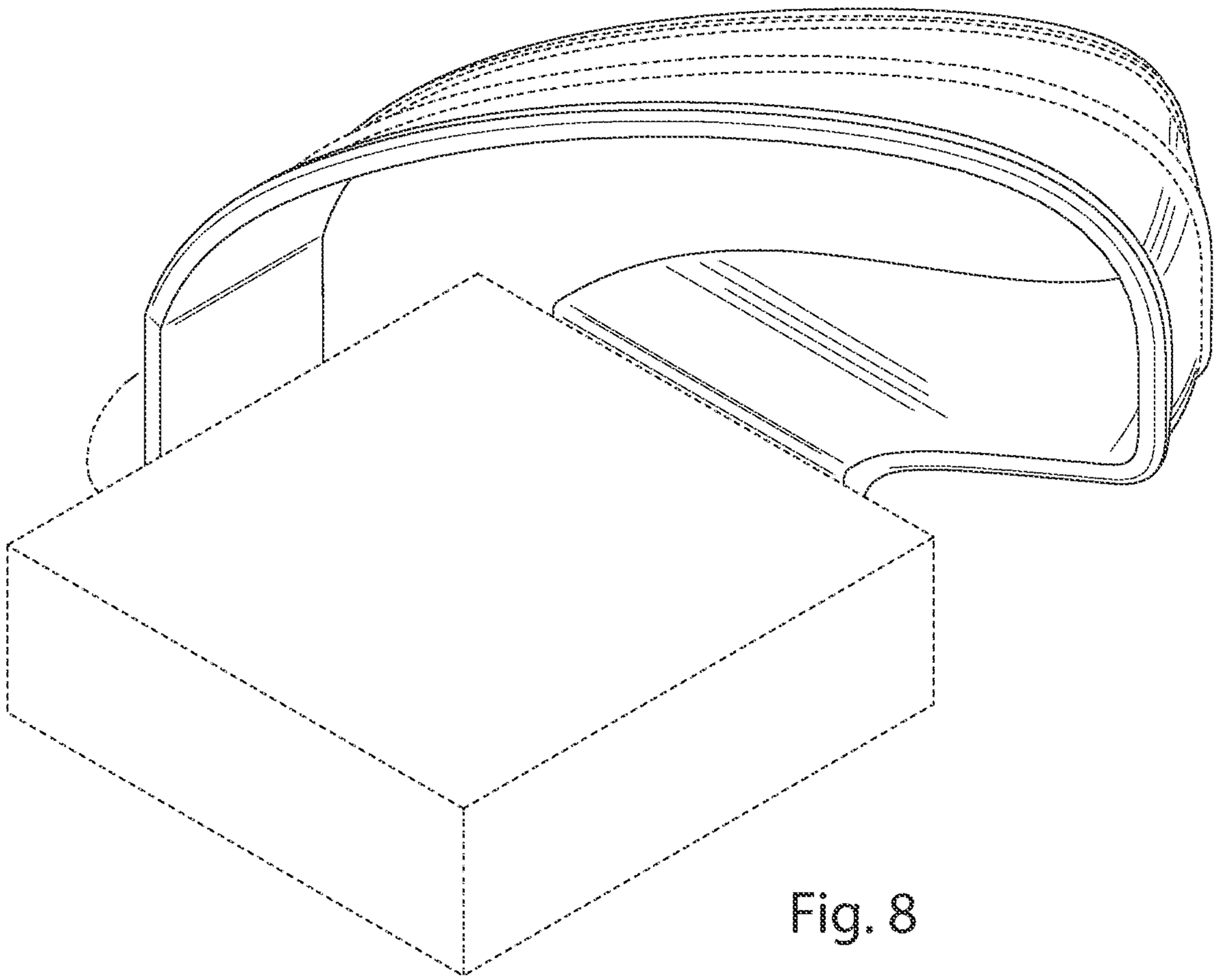

Fig. 8

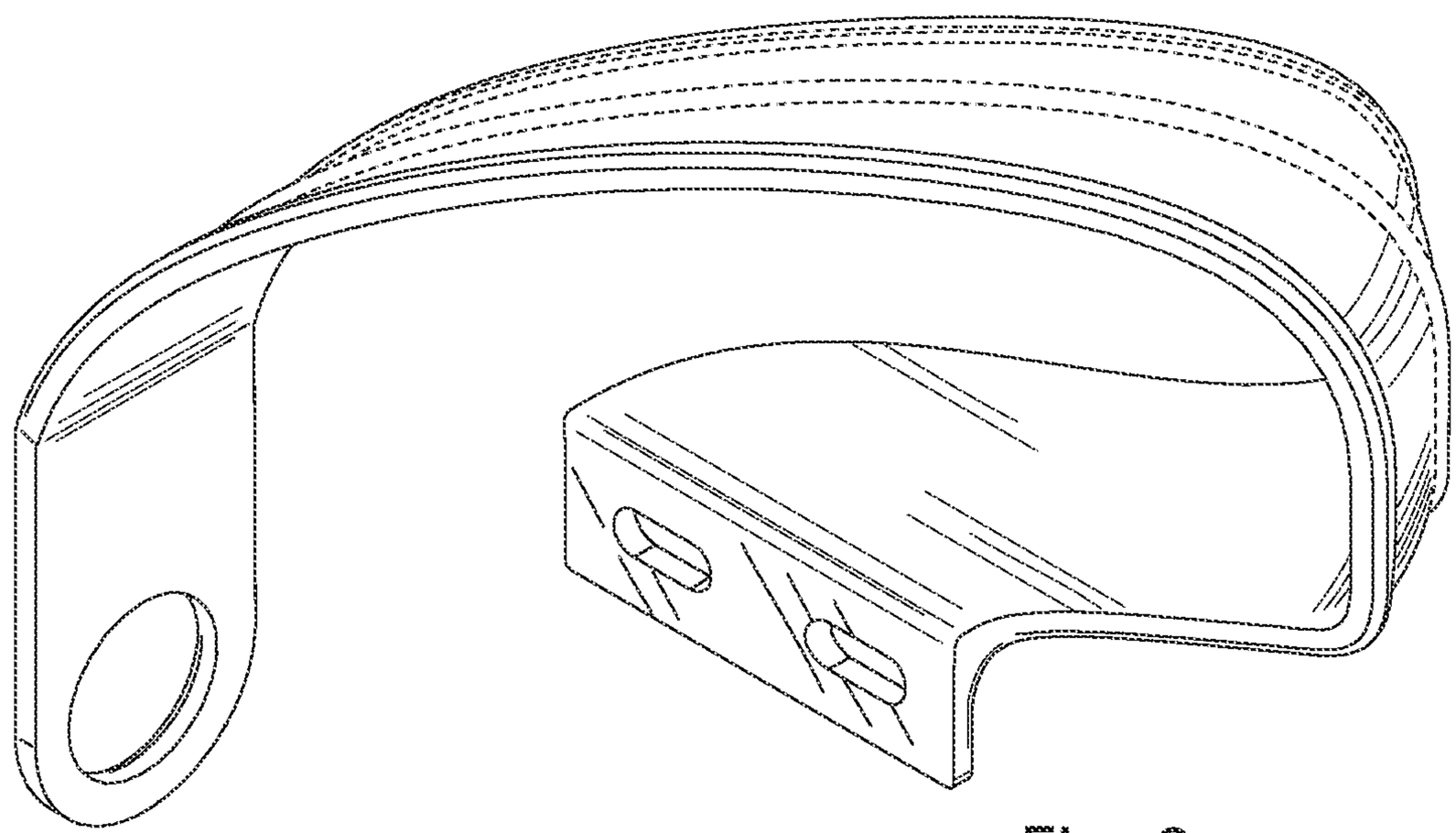

Fig. 9

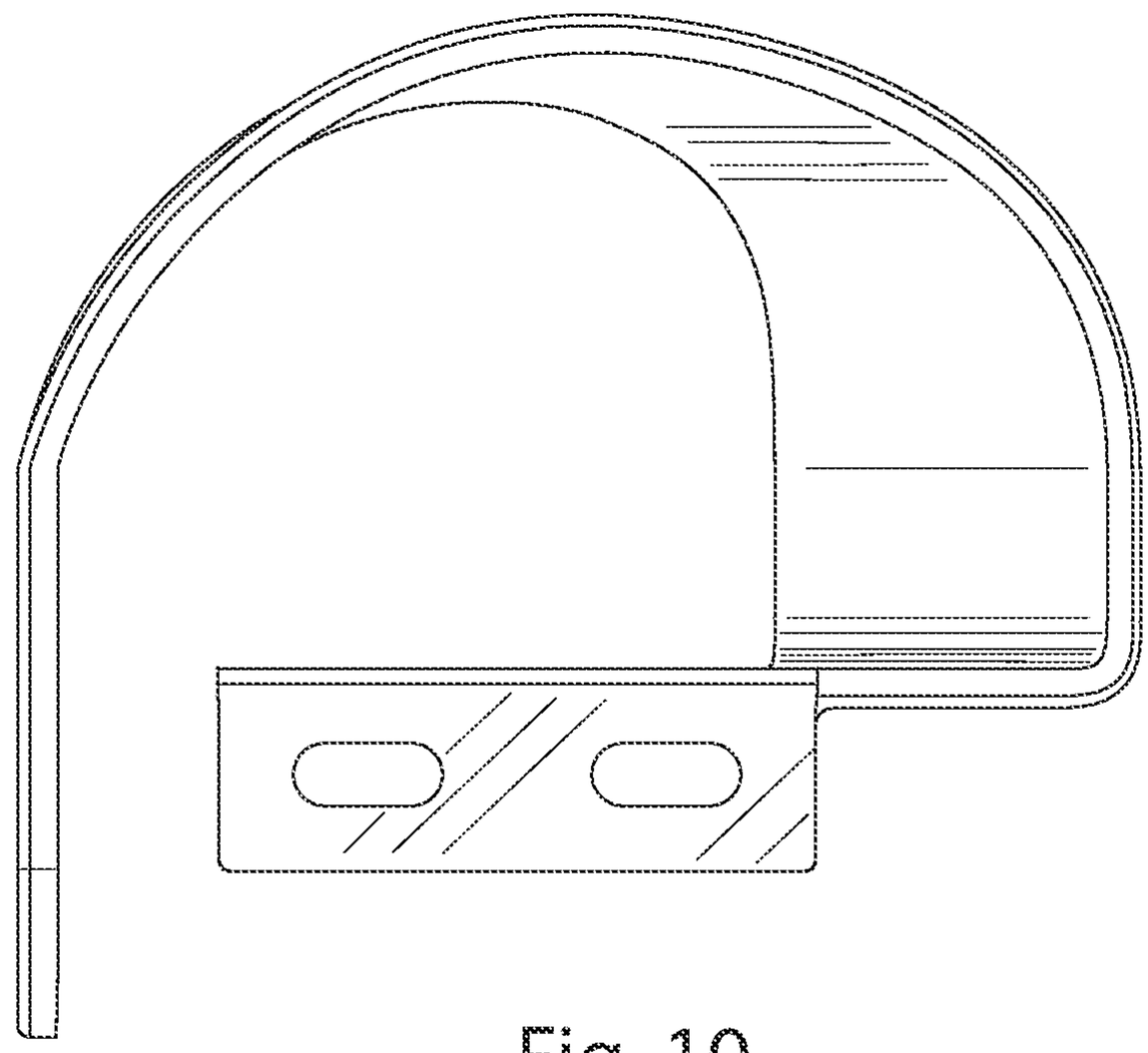

Fig. 10

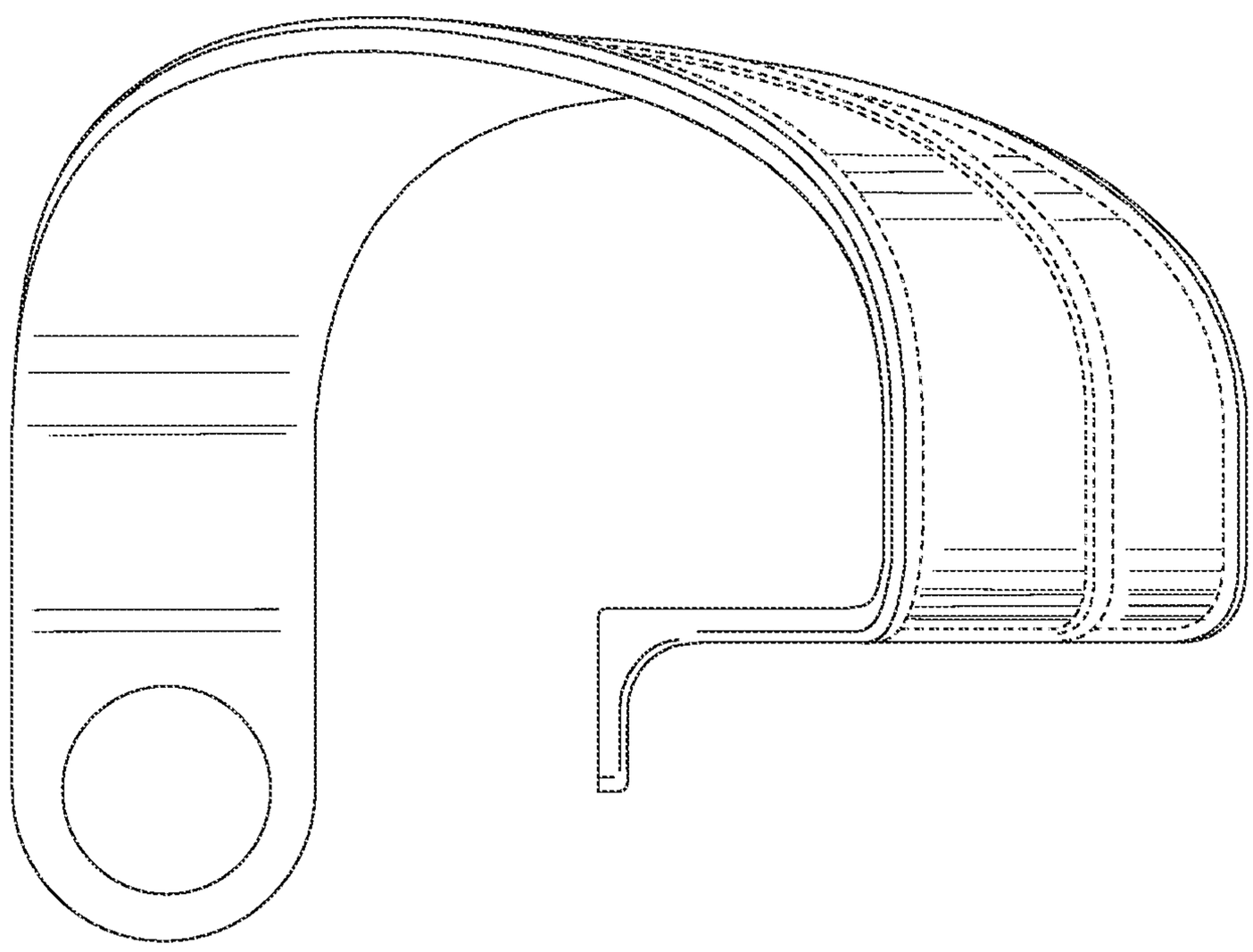

Fig. 11

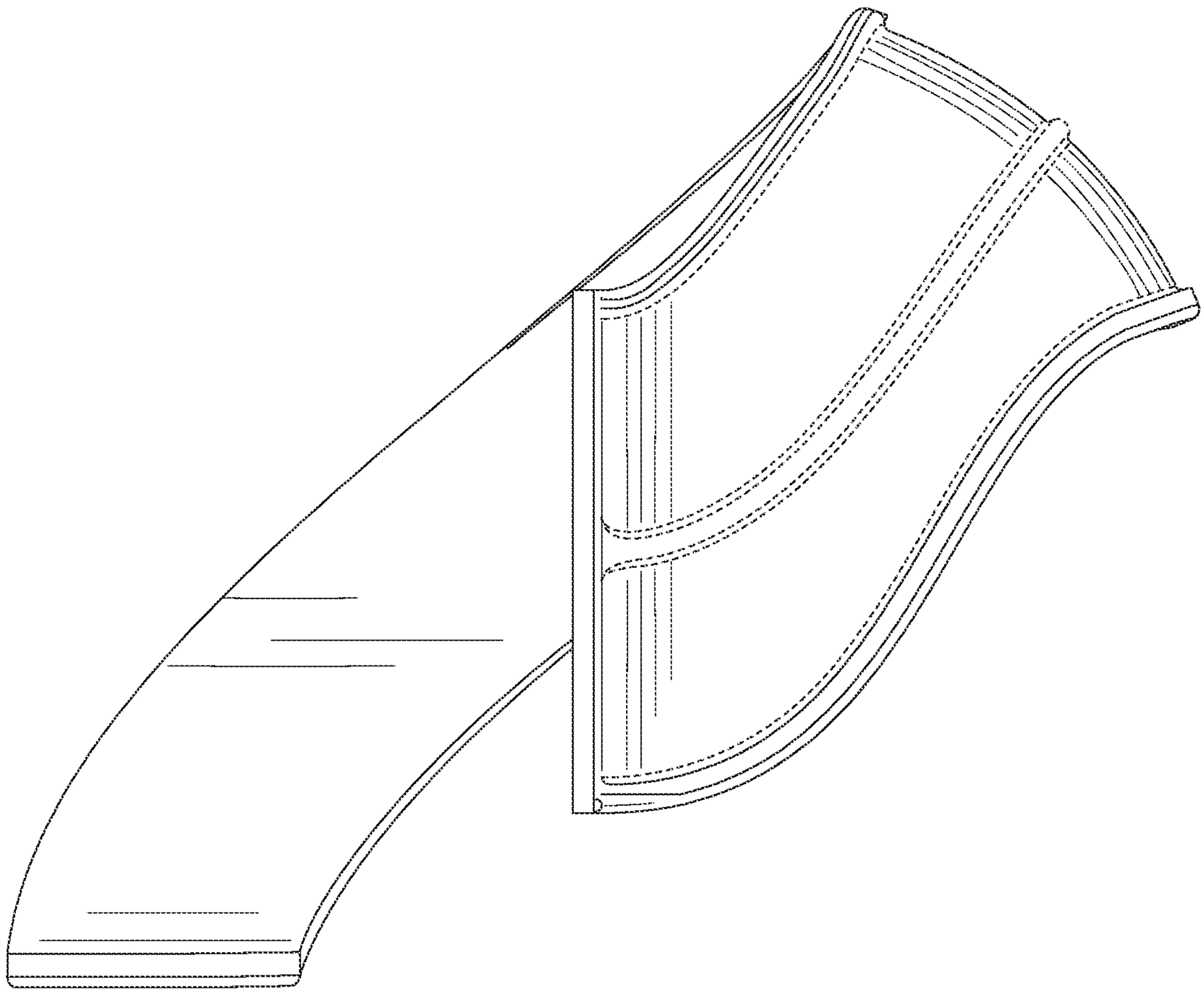

Fig 12

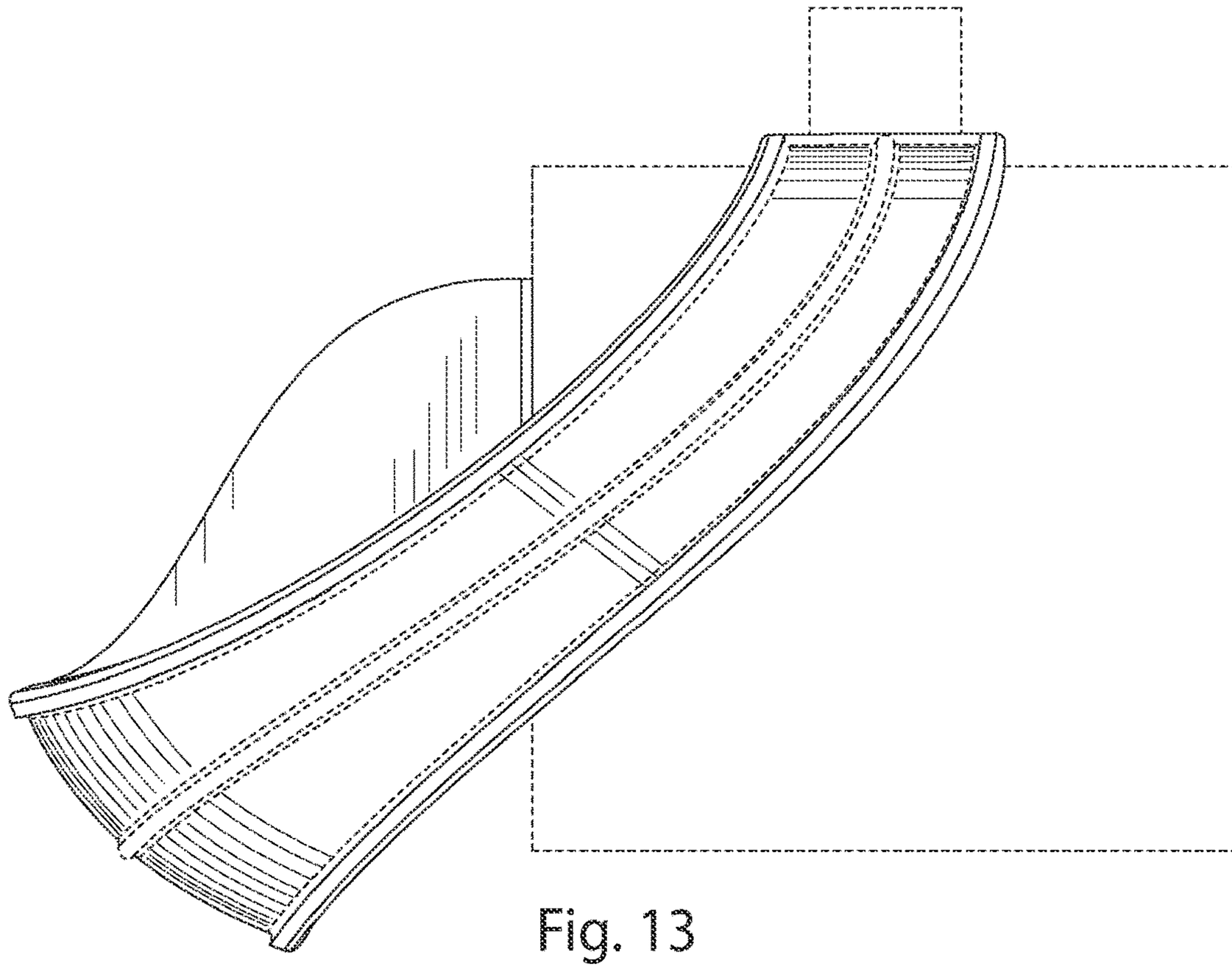

Fig. 13

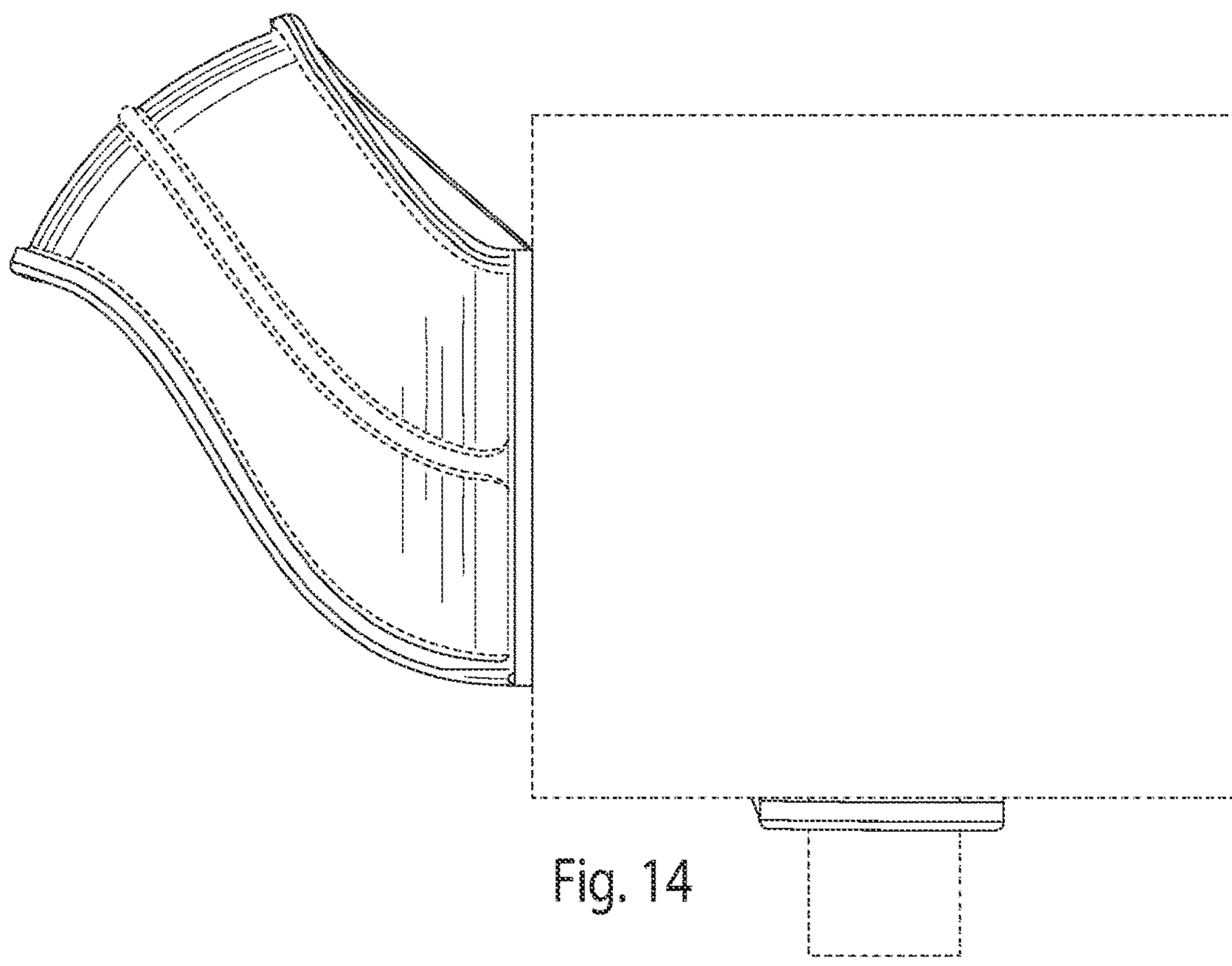

Fig. 14

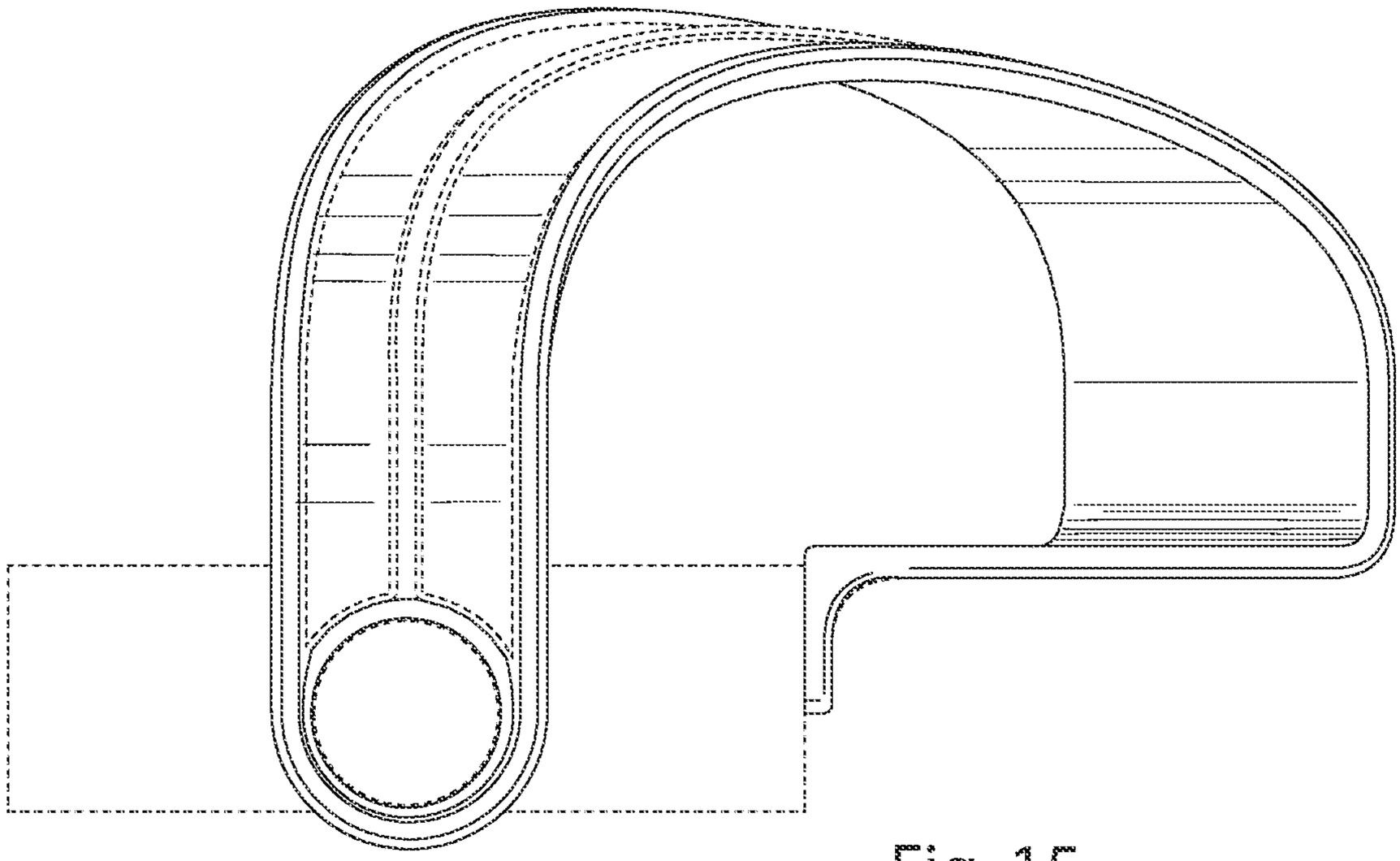

Fig. 15

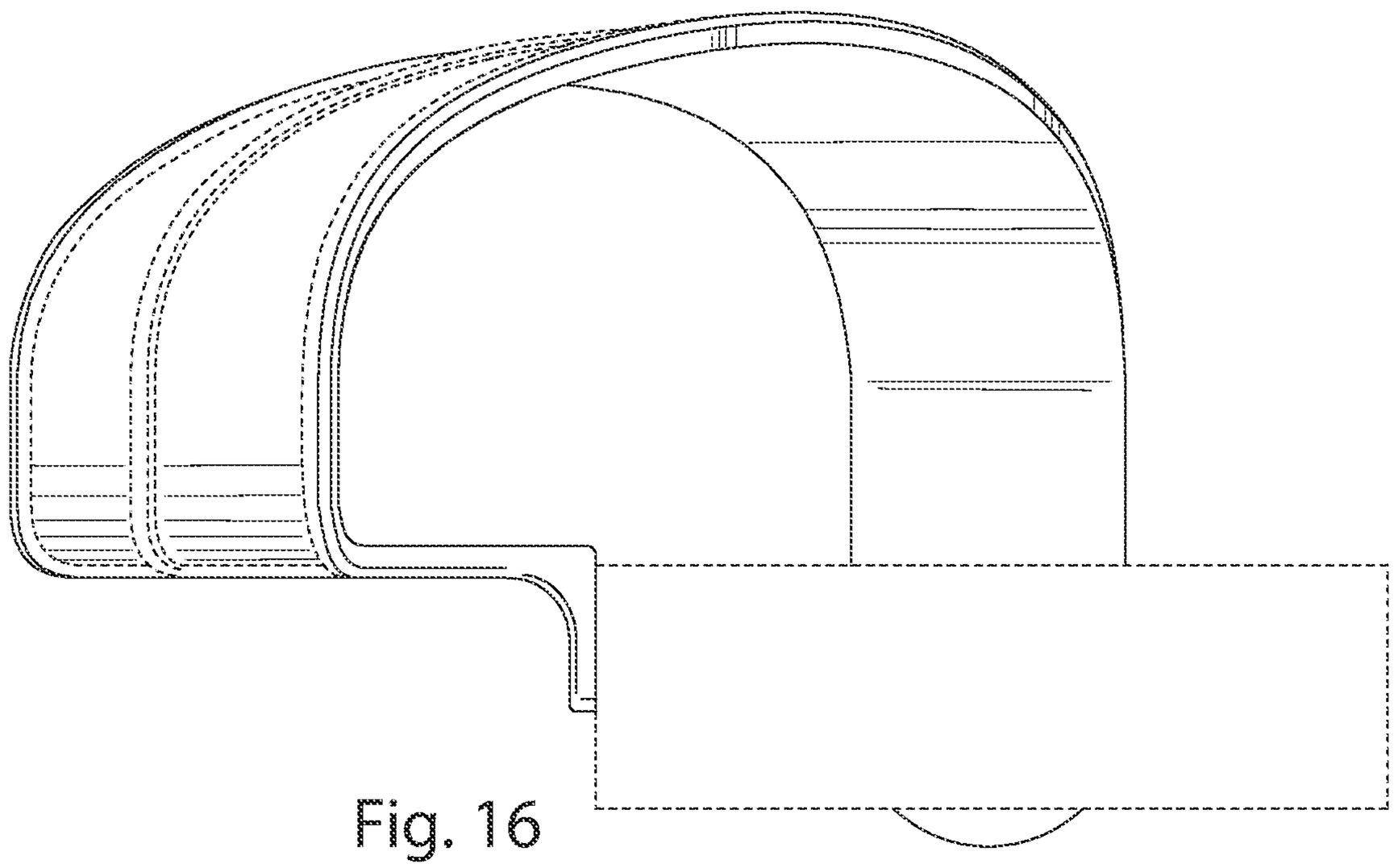

Fig. 16

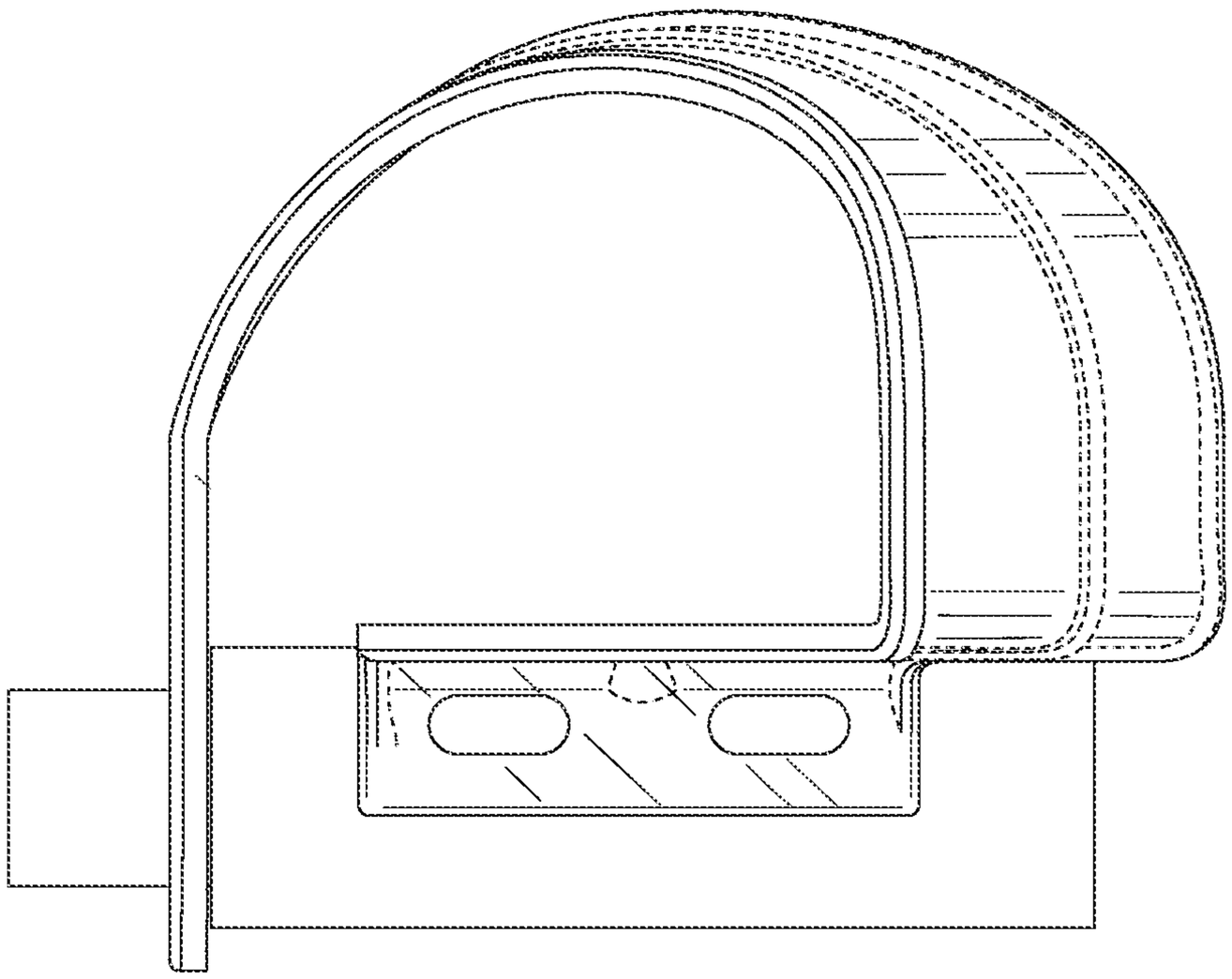

Fig. 17

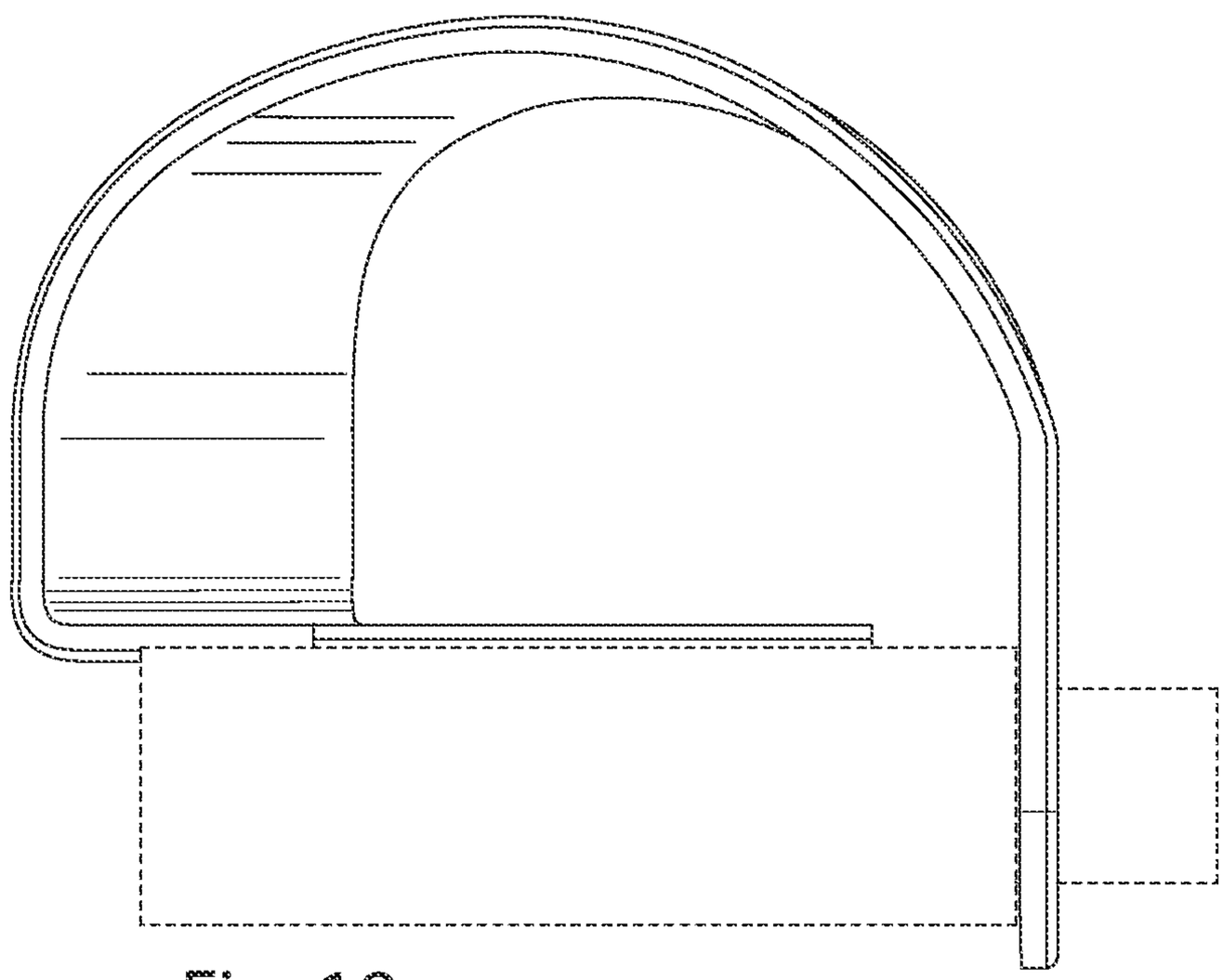

Fig. 18

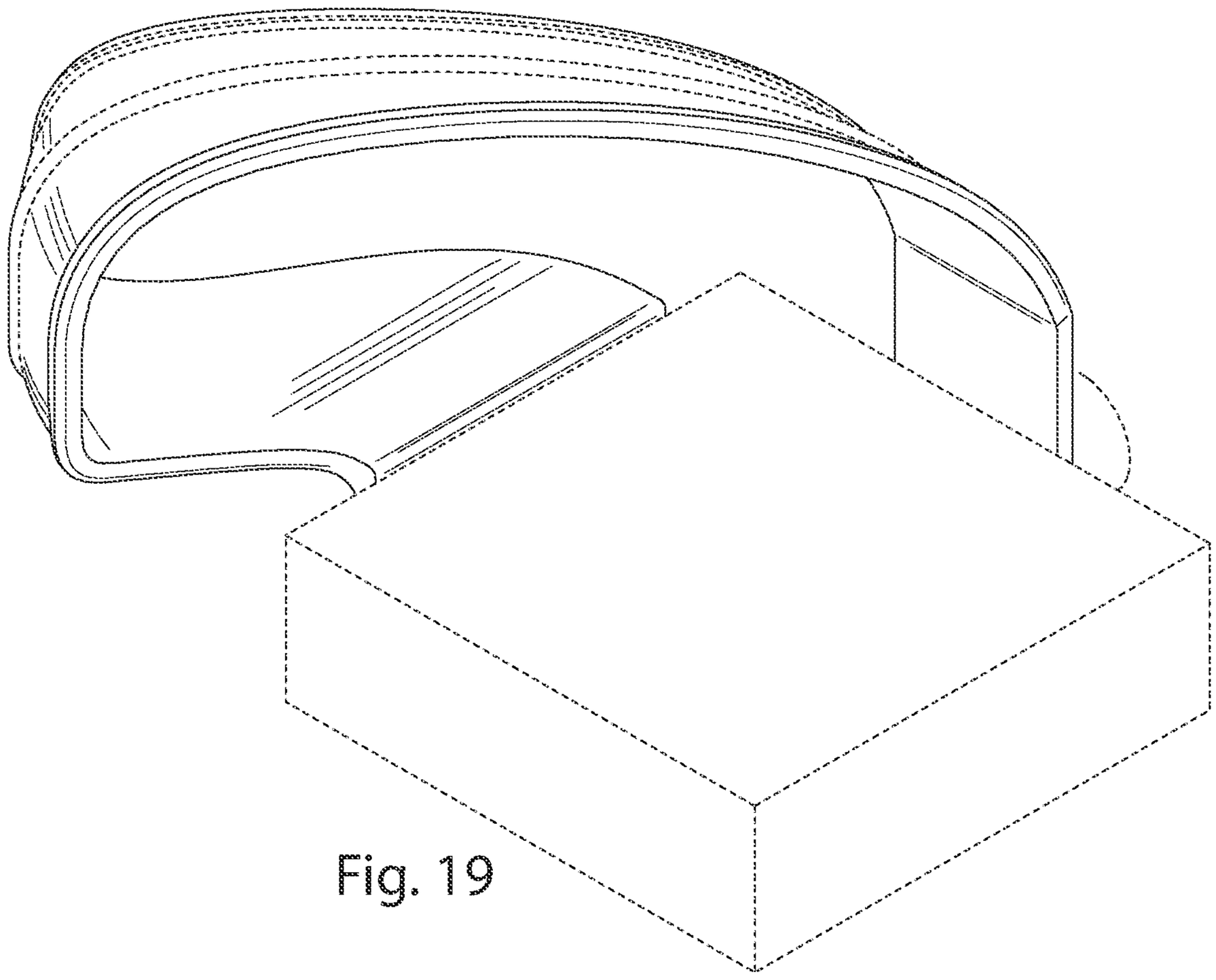

Fig. 19

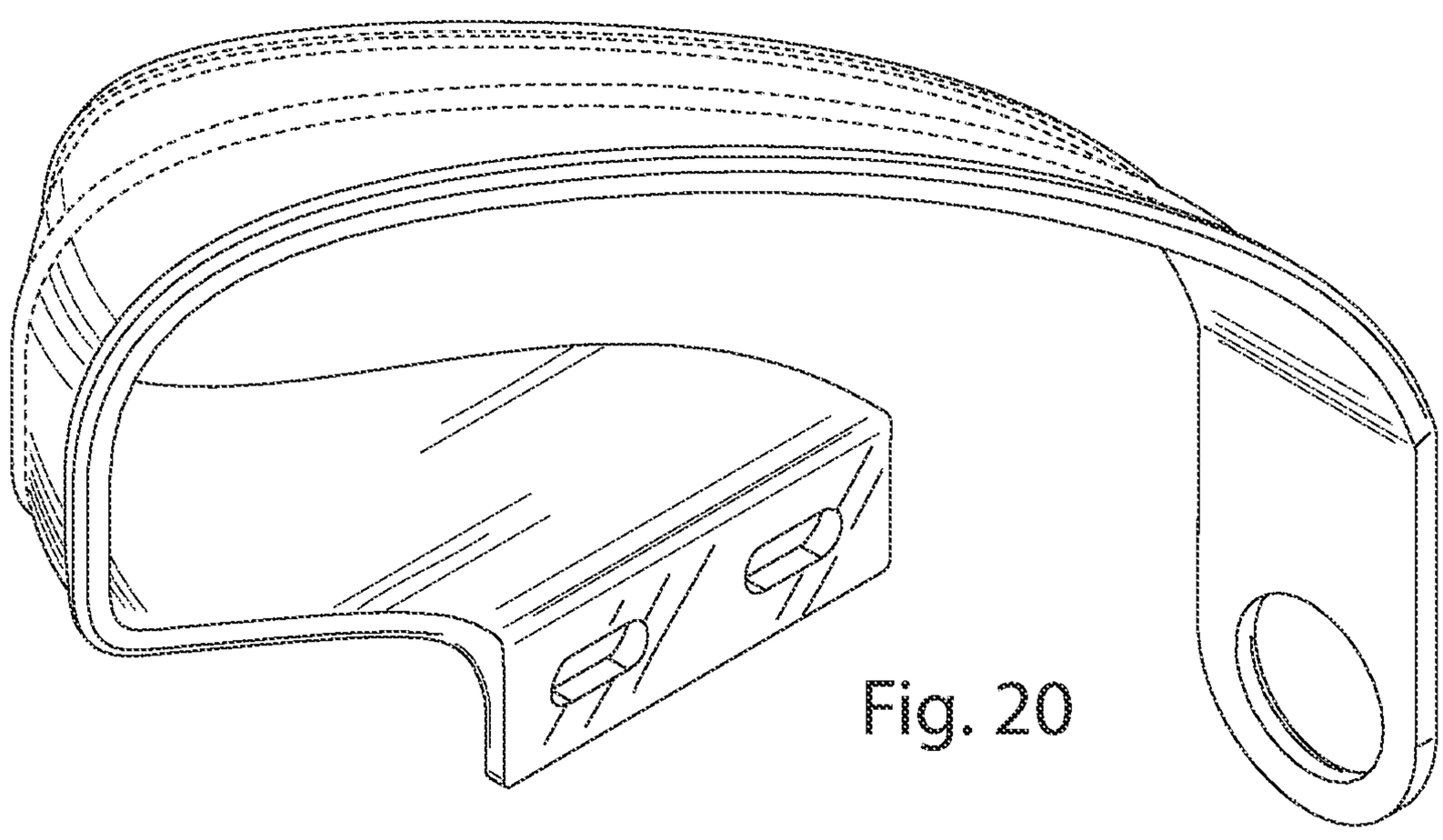

Fig. 20

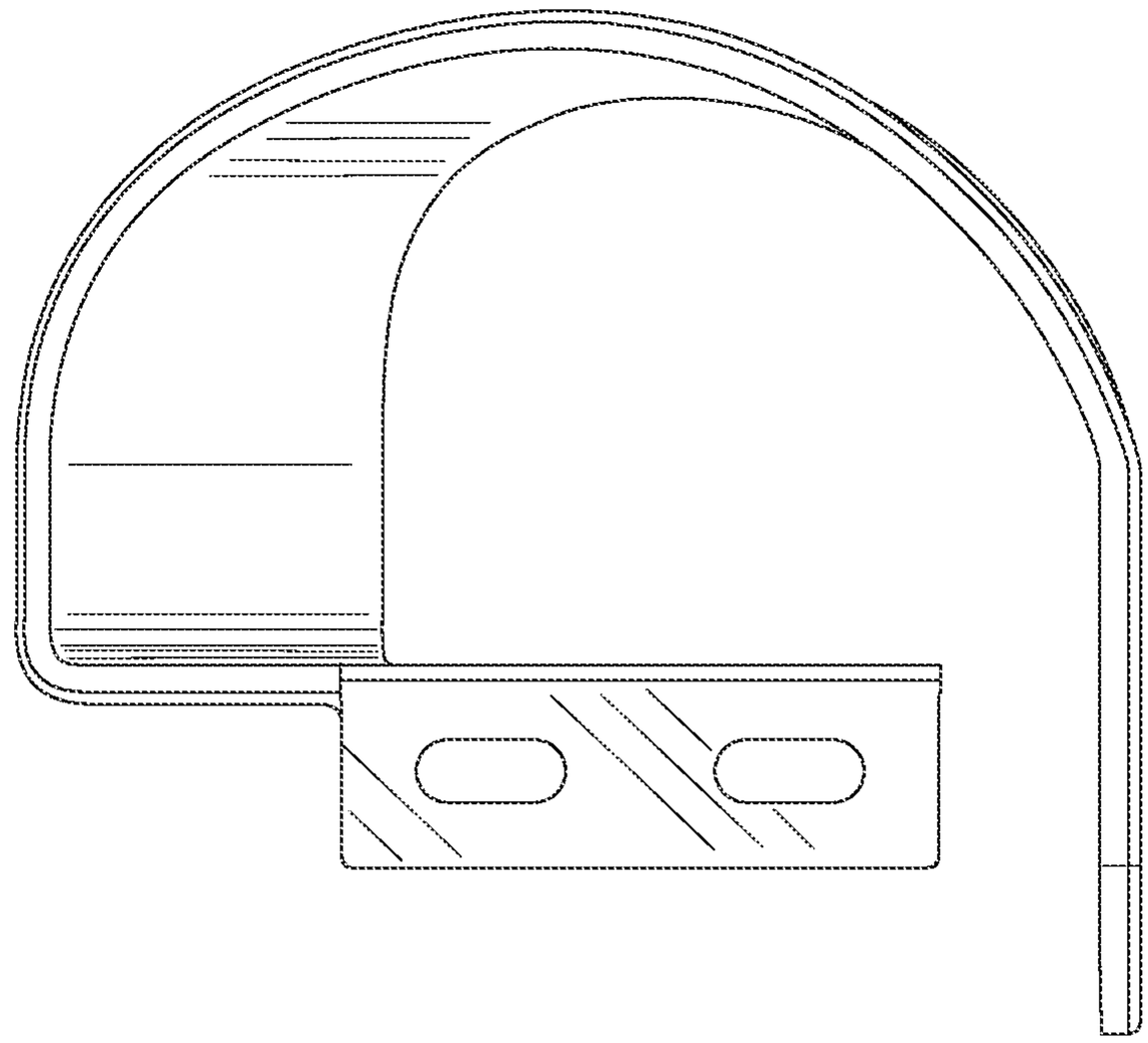

Fig. 21

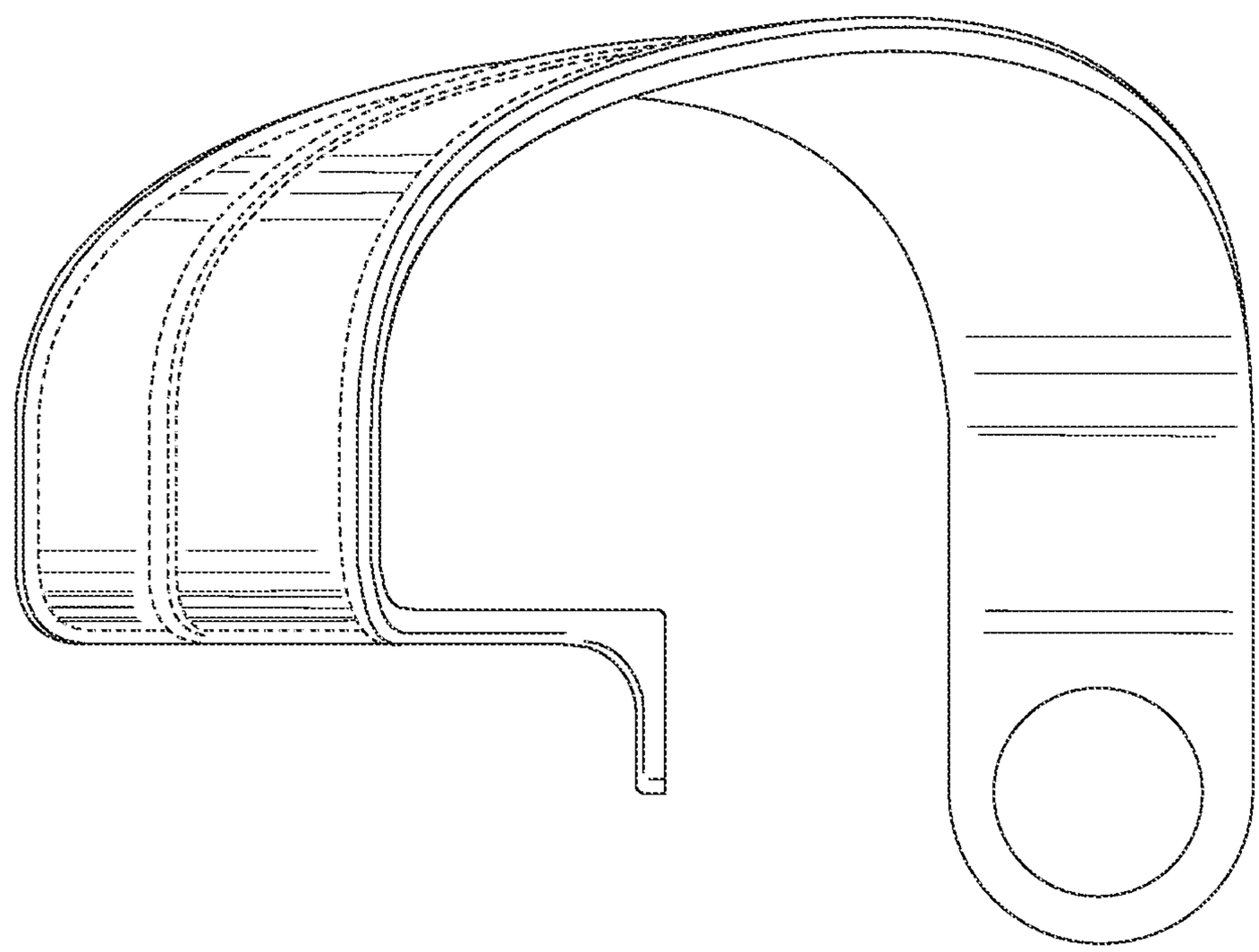

Fig. 22

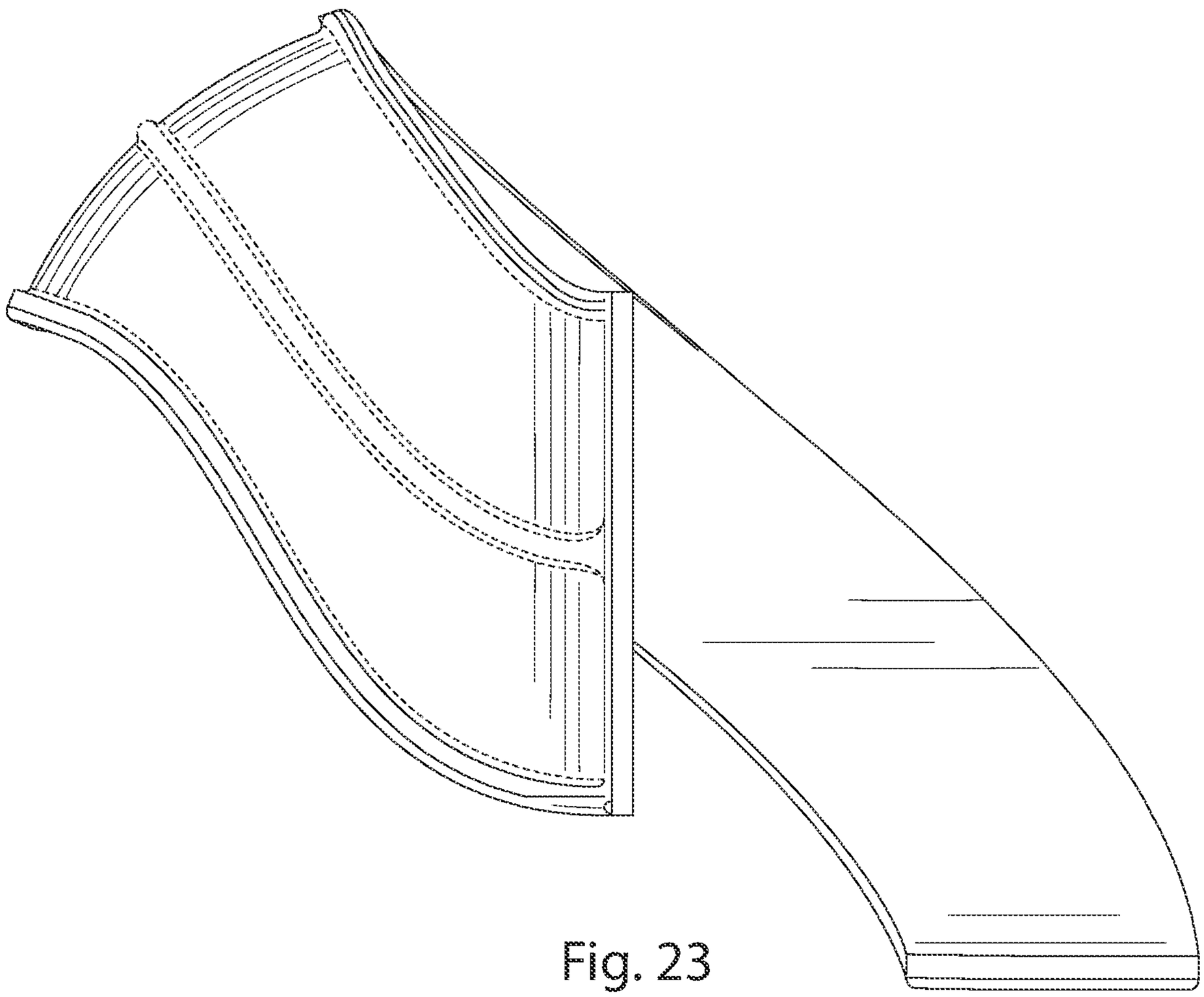

Fig. 23