US00D922676S

(12) United States Design Patent
Masri

(10) Patent No.: US D922,676 S
(45) Date of Patent: ** Jun. 15, 2021

(54) **HOOKAH**

(71) Applicant: **Starbuzz Tobacco, Inc.**, Foothill Ranch, CA (US)

(72) Inventor: **Rodney Masri**, San Diego, CA (US)

(73) Assignee: **Starbuzz Tobacco, Inc.**, Foothill Ranch, CA (US)

(**) Term: **15 Years**

(21) Appl. No.: **29/750,234**

(22) Filed: **Sep. 11, 2020**

Related U.S. Application Data

(62) Division of application No. 29/663,690, filed on Sep. 18, 2018, now Pat. No. Des. 899,675.

(51) **LOC (13) Cl.** **27-02**

(52) **U.S. Cl.**
USPC **D27/162**

(58) **Field of Classification Search**
USPC D27/100, 103, 162–165, 167, 168, 169, D27/180, 183, 194; D11/154, 157; D23/360
CPC A24F 1/30; A24F 1/02; A24F 1/00; A24F 47/008; A24F 47/002; A61M 11/00
See application file for complete search history.

(56) **References Cited**

U.S. PATENT DOCUMENTS

D368,324 S * 3/1996 Heine D27/162
D547,489 S * 7/2007 Kassir D27/162
D554,797 S * 11/2007 Kassir D27/162
D558,919 S * 1/2008 Kassir D27/162
D561,388 S * 2/2008 Kassir D27/162
D584,853 S * 1/2009 Kassir D27/162
D622,099 S * 8/2010 Pike D27/162
7,827,995 B2 * 11/2010 Chaoui A24F 1/30 131/173
8,757,170 B2 * 6/2014 Kaplani A24F 1/30 131/194
D742,587 S * 11/2015 Masri D27/162
D748,854 S * 2/2016 Afridi D27/162
D754,392 S * 4/2016 Helou D27/162
D755,439 S * 5/2016 Helou D27/162
D757,997 S * 5/2016 Elhalwani D27/162
D757,998 S * 5/2016 Elhalwani D27/162
D757,999 S * 5/2016 Elhalwani D27/162
(Continued)

OTHER PUBLICATIONS

Vento Hookah By: Myahookah found on line Mar. 8, 2021 https://myahookah.com/product/vento-hookah/.*
(Continued)

Primary Examiner — Marissa J Cash
Assistant Examiner — Rebecca Tsehaye
(74) *Attorney, Agent, or Firm* — Natu J. Patel; The Patel Law Firm, P.C.

(57) **CLAIM**

The ornamental design for a hookah, as shown and described.

DESCRIPTION

FIG. **1** is a top perspective view of a hookah embodying the new design;
FIG. **2** is a bottom perspective view thereof;
FIG. **3** is a top plan view thereof;
FIG. **4** is a bottom plan view thereof;
FIG. **5** is a left side elevation view thereof;
FIG. **6** is a right side elevation view thereof;
FIG. **7** is a rear elevation view thereof; and,
FIG. **8** is a front elevation view thereof.
The broken lines in the drawings depict portions of the hookah that form no part of the claimed design.
The shading lines only help to show the shape and do not depict any surface decoration.

1 Claim, 8 Drawing Sheets

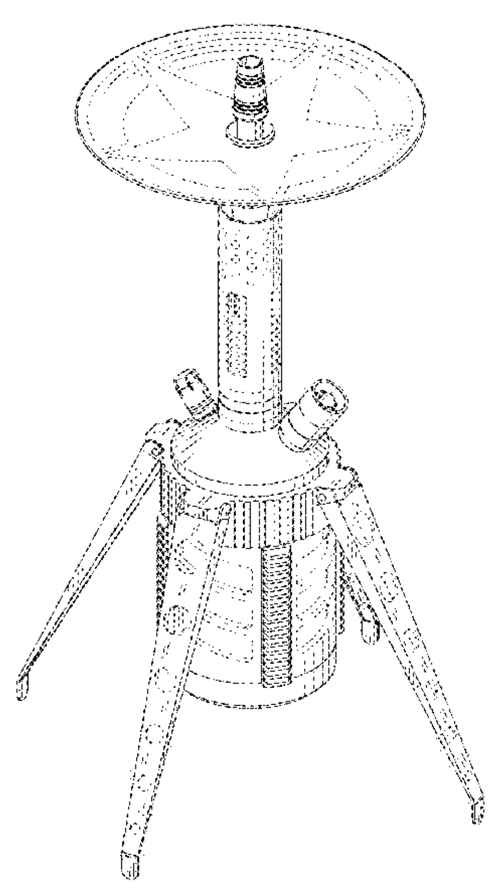

(56) **References Cited**

U.S. PATENT DOCUMENTS

D758,000	S	*	5/2016	Elhalwani	D27/162
D758,001	S	*	5/2016	Elhalwani	D27/162
D758,002	S	*	5/2016	Elhalwani	D27/162
D773,113	S	*	11/2016	Elhalwani	D27/162
9,775,382	B2	*	10/2017	Wang	A24F 47/008
10,165,796	B2	*	1/2019	Gebara	A24F 5/00
D875,301	S	*	2/2020	Masri	D27/16
D895,198	S	*	9/2020	Masri	D27/162
D899,675	S	*	10/2020	Masri	D27/162
2009/0095310	A1	*	4/2009	Chaoui	A24F 1/30 131/173
2012/0180803	A1	*	7/2012	Beloni	A24F 1/30 131/173
2016/0360788	A1	*	12/2016	Wang	A24F 47/008
2017/0055570	A1	*	3/2017	Elhalwani	A24F 1/30
2020/0236991	A1	*	7/2020	Hilala	A24F 1/30

OTHER PUBLICATIONS

Wael Elhalwani; Specimen filed in connection with application for U.S. trademark registration No. 5,490,461 for Carbine trademark showing the SB-Carbine design; filed Sept. 17, 2017; Specimen downloaded on Feb. 13, 2020; Published in the U.S.*

Starbuzz Tobacco, Inc.; Video posted on @starbuzztobacco Instagram account previewing the SB-Carbine Hookah design, originally posted on Instagram on Nov. 13, 2017; URL: https://www.instagram.com/p/ BbcvSLFwj6f/; Screenshot captured on Feb. 14, 2020; Video posted from the U.S., published in countries where Instagram is accessible.*

* cited by examiner

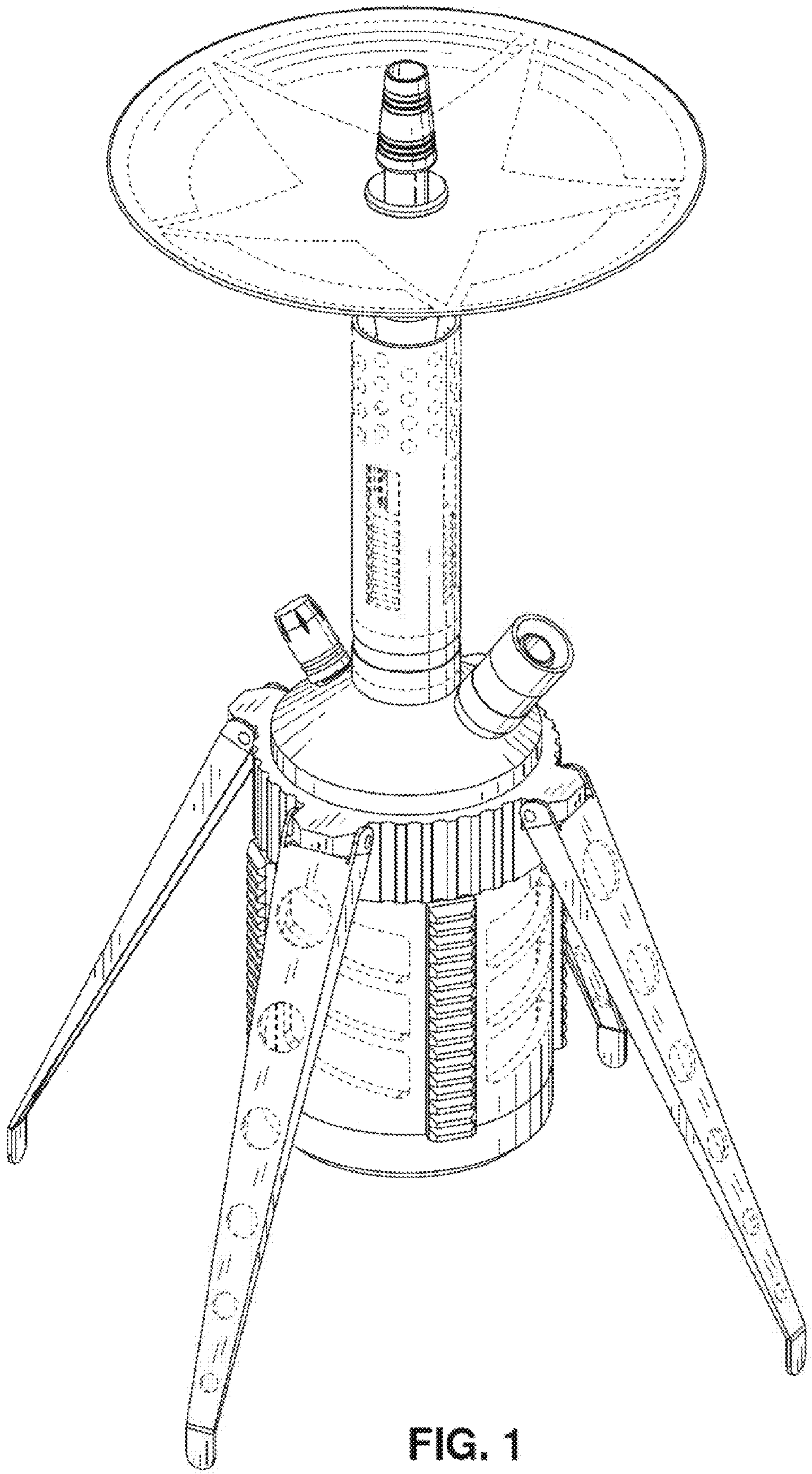

FIG. 1

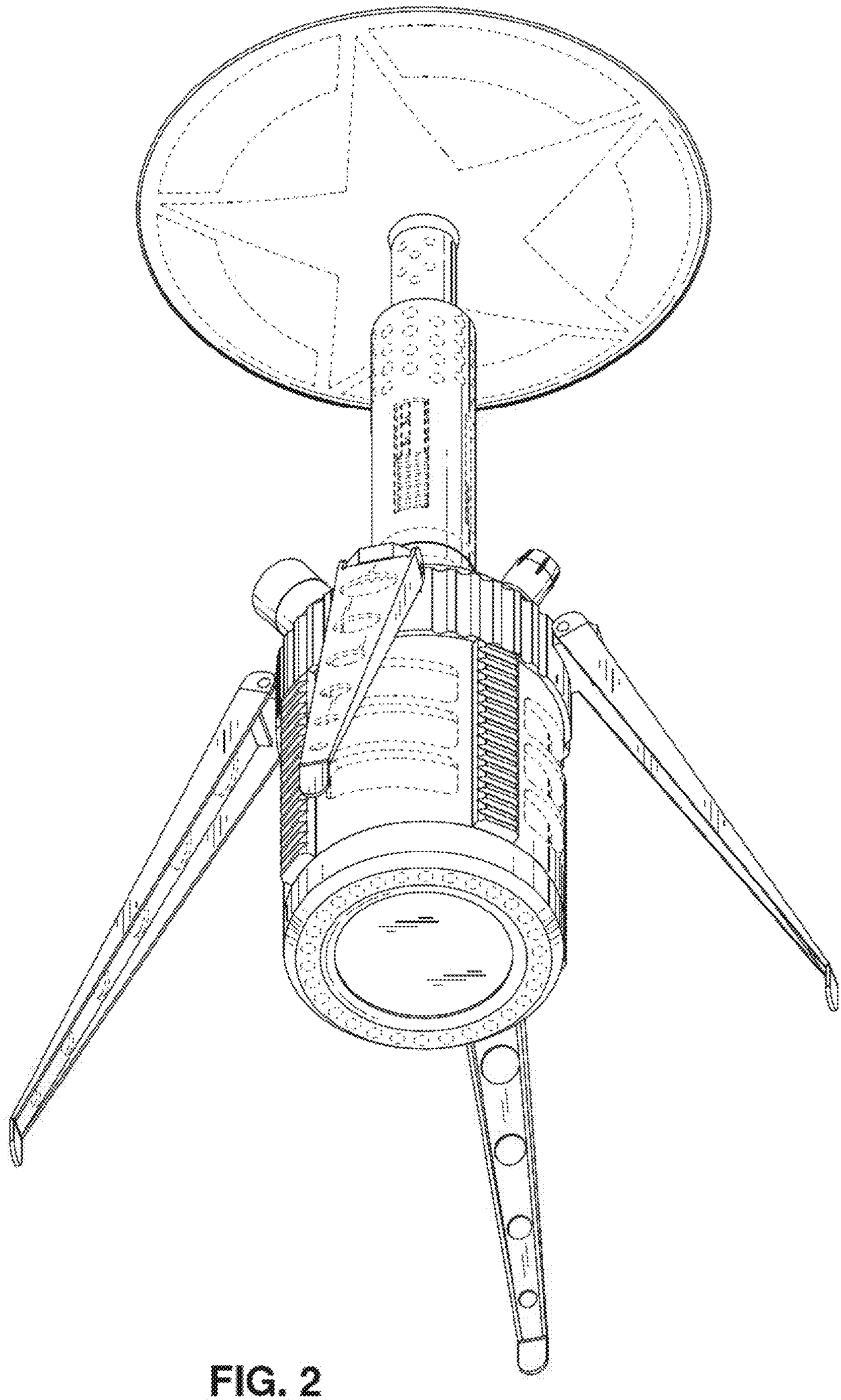

FIG. 2

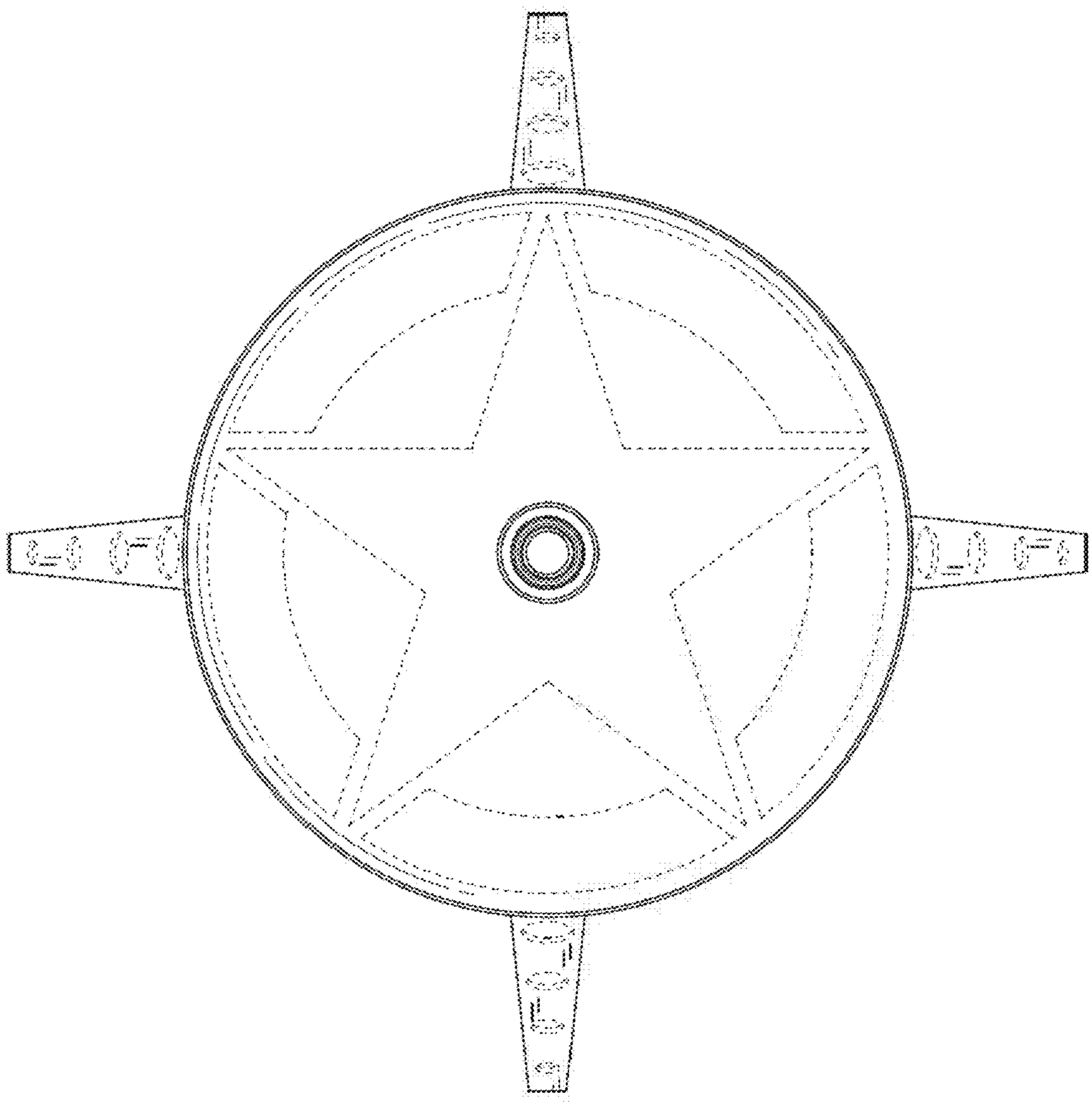

FIG. 3

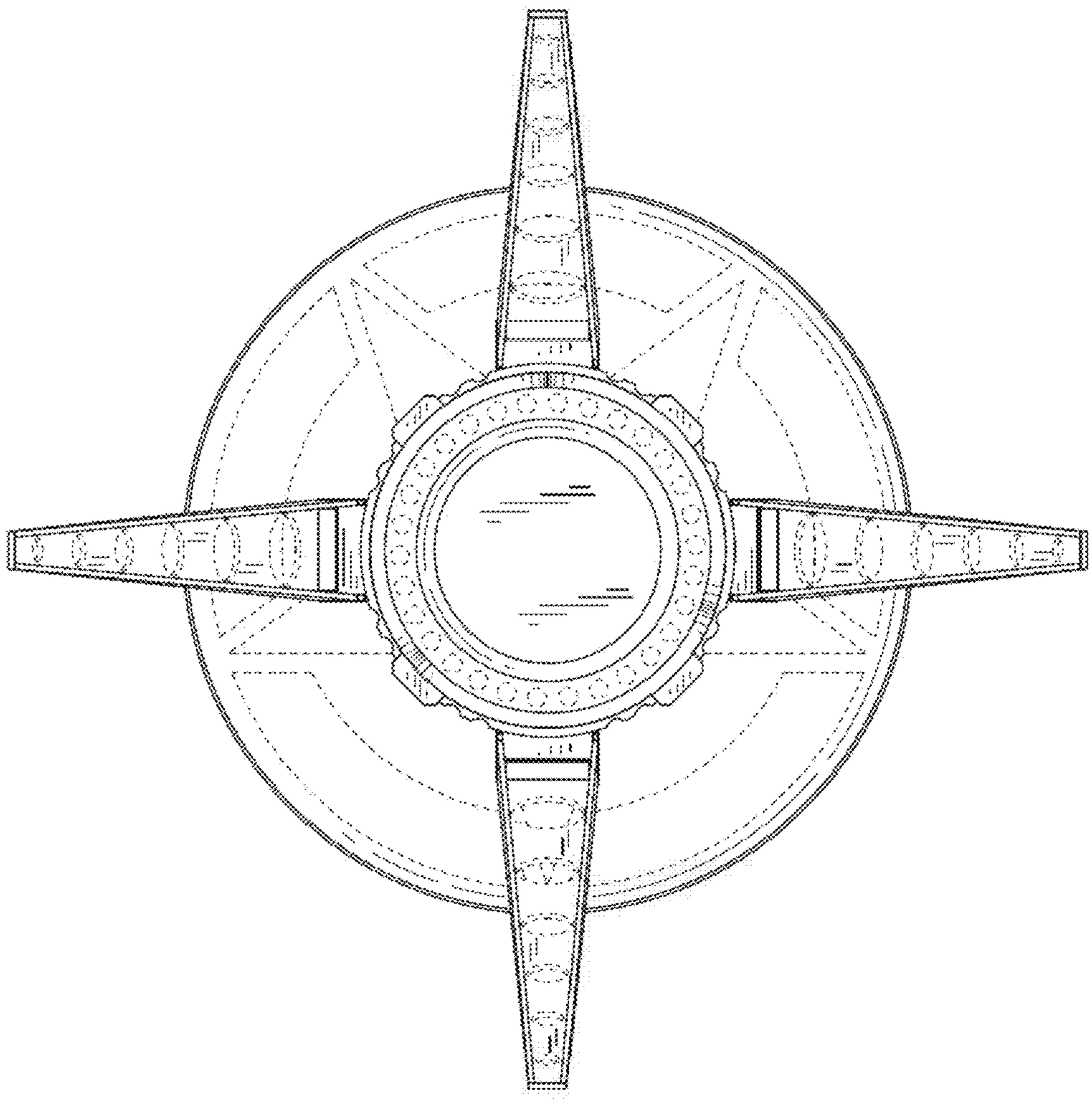

FIG. 4

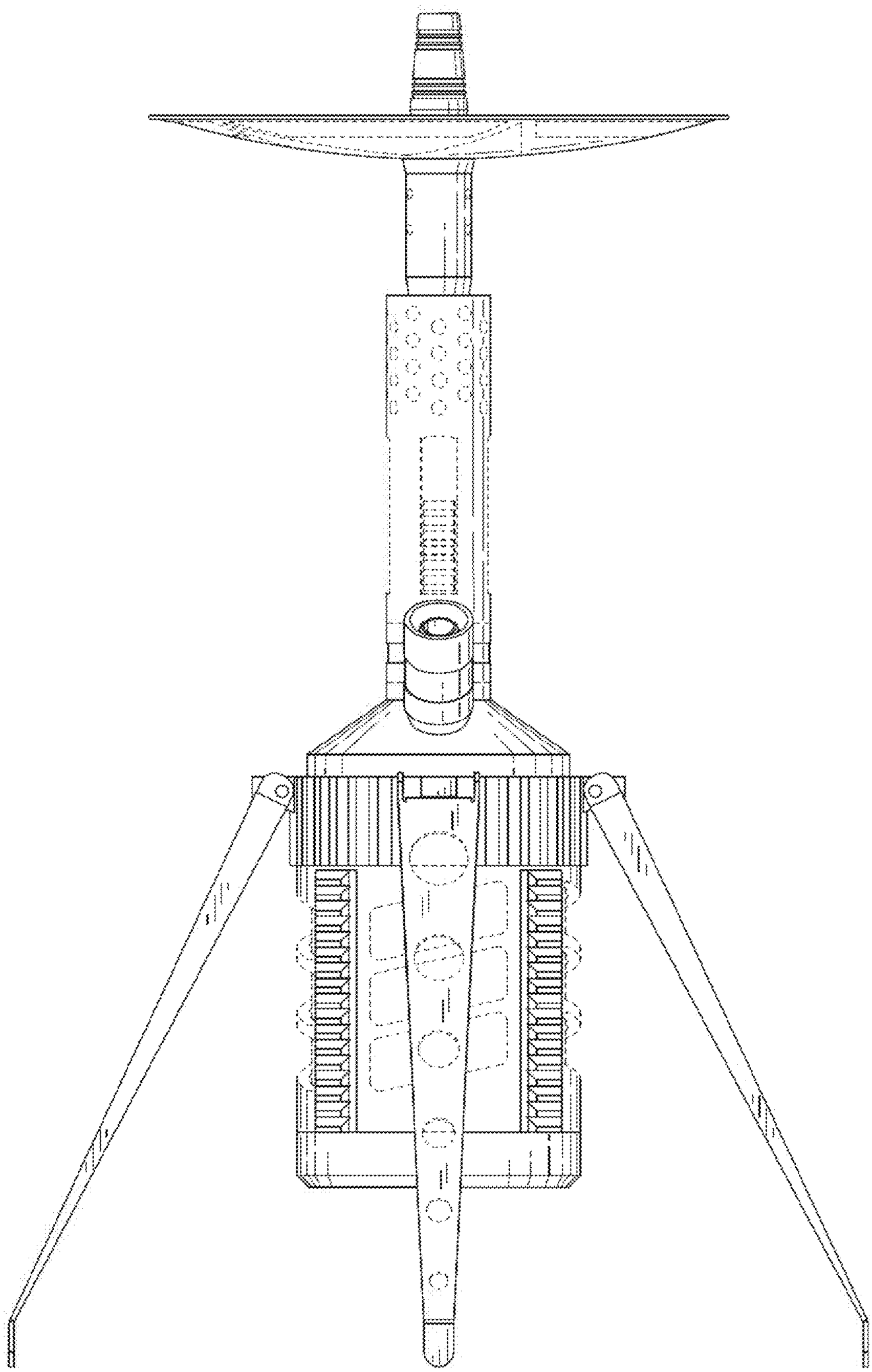

FIG. 5

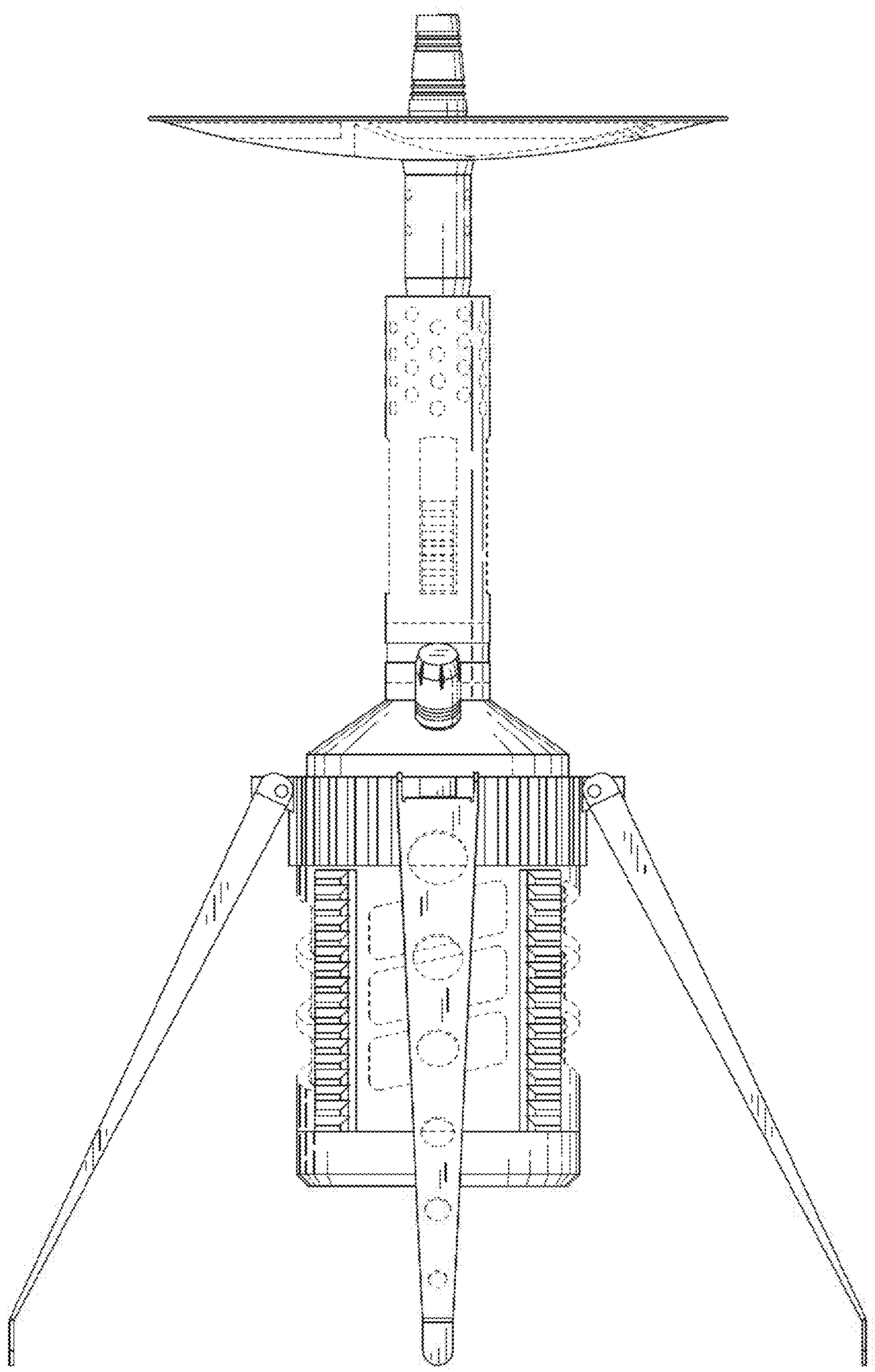

FIG. 6

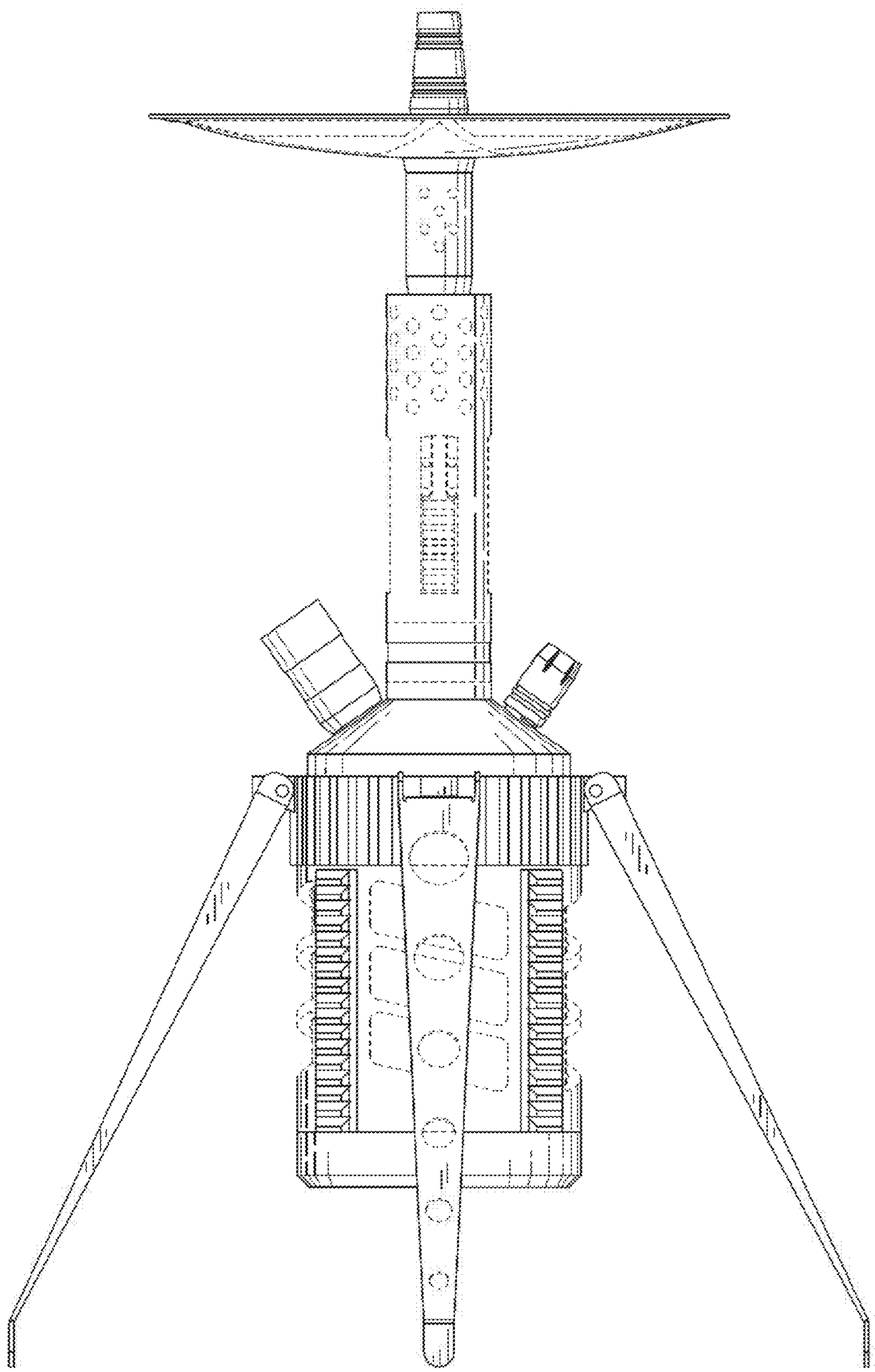

FIG. 7

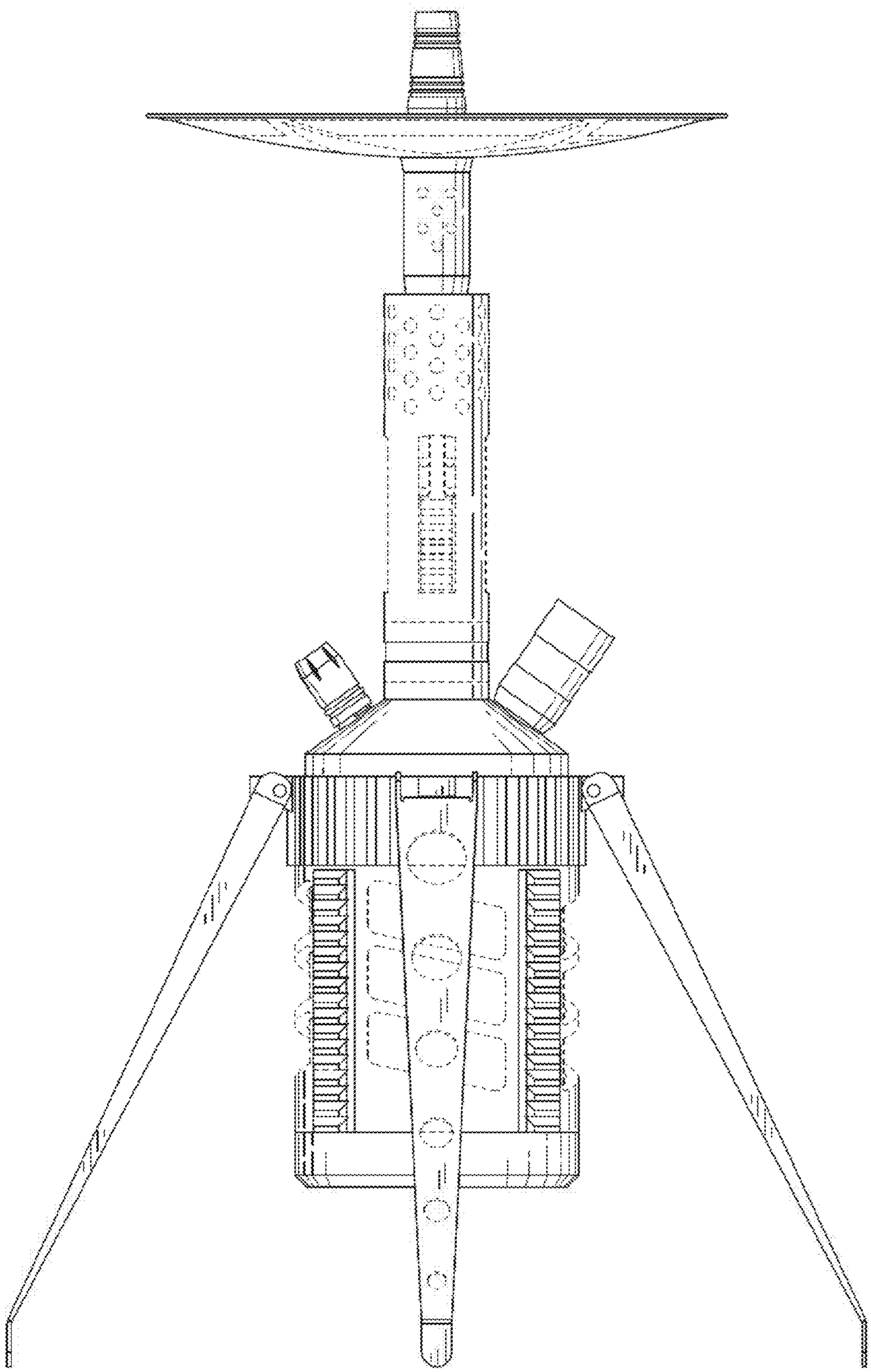

FIG. 8