US00D921712S

(12) United States Design Patent

Lee et al.

(10) Patent No.: US D921,712 S
(45) Date of Patent: ** Jun. 8, 2021

(54) **REFRIGERATOR**

(71) Applicant: **Samsung Electronics Co., Ltd.**, Suwon-si (KR)

(72) Inventors: **Seonju Lee**, Suwon-si (KR); **Jaemin Lee**, Suwon-si (KR); **Aeryun Kim**, Suwon-si (KR)

(73) Assignee: **Samsung Electronics Co., Ltd.**, Suwon-si (KR)

(**) Term: **15 Years**

(21) Appl. No.: **29/722,347**

(22) Filed: **Jan. 29, 2020**

(30) **Foreign Application Priority Data**

Aug. 8, 2019 (KR) 30-2019-0037988

(51) **LOC (13) Cl.** **15-07**

(52) **U.S. Cl.**
USPC **D15/86**

(58) **Field of Classification Search**
USPC D15/79, 80, 81, 82, 83, 84, 85, 86, 87, D15/88, 89, 90, 91

(Continued)

(56) **References Cited**

U.S. PATENT DOCUMENTS

D597,563 S * 8/2009 Choi D15/87
D597,564 S * 8/2009 Choi D15/87

(Continued)

FOREIGN PATENT DOCUMENTS

CN 2017306861066 2/2018
CN 2018302220132 1/2019

(Continued)

OTHER PUBLICATIONS

Kim, Gray "Samsung Bespoke Experience Team Recruitment! Put home appliance in line with my house Apply for the Bespoke Refrigerator Experience" [2019] www.blog.naver.com Jun. 25, 2019 <https://blog.naver.com/ny1128ny/221570041206>.

(Continued)

Primary Examiner — Mojtaba Tehrani
(74) *Attorney, Agent, or Firm* — NSIP Law

(57) **CLAIM**

We claim the ornamental design for a refrigerator, as shown and described.

DESCRIPTION

FIG. **1** is a front perspective view of a refrigerator showing our new design according to a first embodiment;
FIG. **2** is a front view thereof;
FIG. **3** is a rear view thereof;
FIG. **4** is a left-side view thereof;
FIG. **5** is a right-side view thereof;
FIG. **6** is a top view thereof;
FIG. **7** is a bottom view thereof;
FIG. **8** is an enlarged view of the encircled portion **8** shown in FIG. **1**;
FIG. **9** is an enlarged view of the encircled portion **9** shown in FIG. **1**;
FIG. **10** is an enlarged view of the encircled portion **10** shown in FIG. **1**;
FIG. **11** is an exploded view in which the middle front panel portion is shown separated from the refrigerator;
FIG. **12** is a front perspective view of a refrigerator showing our new design according to a second embodiment;
FIG. **13** is a front view thereof;
FIG. **14** is a rear view thereof;
FIG. **15** is a left-side view thereof;
FIG. **16** is a right-side view thereof;
FIG. **17** is a top view thereof;
FIG. **18** is a bottom view thereof;
FIG. **19** is an enlarged view of the encircled portion **19** shown in FIG. **12**;
FIG. **20** is an enlarged view of the encircled portion **20** shown in FIG. **12**;
FIG. **21** is an enlarged view of the encircled portion **21** shown in FIG. **12**; and,

(Continued)

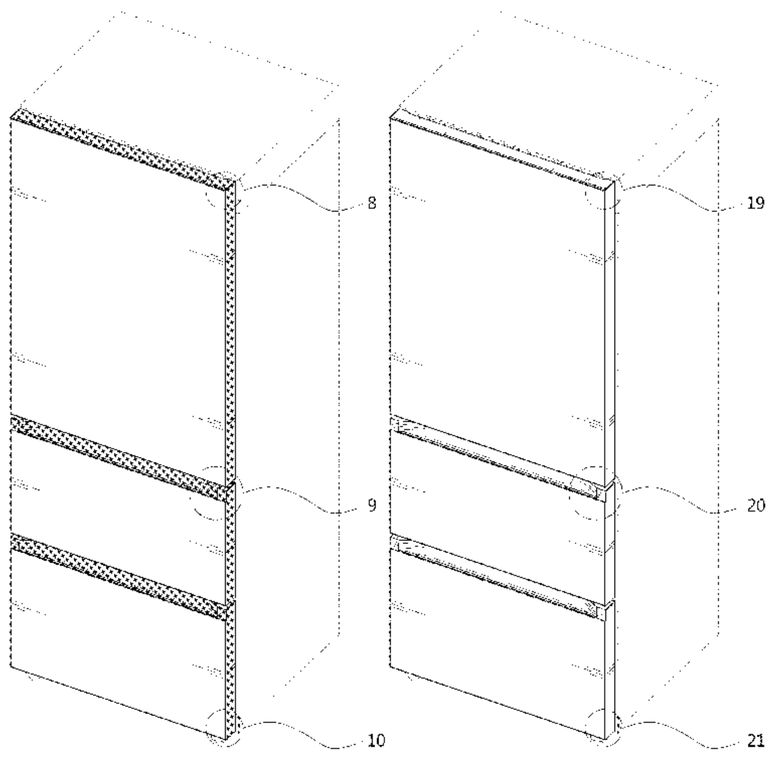

FIG. **22** is an exploded view in which the middle front panel portion is shown separated from the refrigerator.
The short dash-dash broken lines in the figures depict portions of the refrigerator which form no part of the claimed design.
The dot-dot-dash broken lines encircling portions of the claimed design that are illustrated in enlargements form no part of the claimed design.
The gray tones shown in FIGS. **1** to **11** indicate that the gray portions are the same contrasting color, and do not represent any particular color.

1 Claim, 22 Drawing Sheets

(58) **Field of Classification Search**
CPC F25C 2400/10; F25D 2400/10; F25D 2400/12; F25D 2400/14; F25D 2400/18; G05B 2219/2654; G09F 23/0058; Y10S 292/71
See application file for complete search history.

(56) **References Cited**

U.S. PATENT DOCUMENTS

D671,965	S	*	12/2012	Shim	D15/86
D671,966	S	*	12/2012	Jidam	D15/86
D686,644	S	*	7/2013	Lee	D15/86
D696,305	S	*	12/2013	Kim	D15/86
D720,782	S	*	1/2015	Qiang	D15/86
D786,947	S	*	5/2017	Kim	D15/86
D794,685	S	*	8/2017	Wang	D15/86
D797,820	S	*	9/2017	Kim	D15/86
D850,498	S	*	6/2019	Kim	D15/86
D872,774	S	*	1/2020	Yu	D15/86
D876,490	S	*	2/2020	Yu	D15/79
D900,889	S	*	11/2020	Kim	D15/79
D905,130	S	*	12/2020	Yeo	D15/86
D908,746	S	*	1/2021	Lee	D15/89

FOREIGN PATENT DOCUMENTS

CN	201830525253	3/2019
JP	D1620764	12/2018
KR	30-2011-0018450	12/2012
KR	30-2012-0061390	11/2013
KR	30-2013-0000333	12/2013
KR	30-2017-0032697	4/2019

OTHER PUBLICATIONS

"Chinese home appliances 'wearing' design" [2015] www.etnews.com Jan. 18, 2015 <http://www.etnews.com/20150116000103>.
Kitchen Journal. "wearing fridge fashion, replaceable refrigerator panel" [2013] www.exday.co.kr Mar. 8, 2013 <http://www.ezday.co.kr/bbs/view_board.html?q_sq_board=4633985>.

* cited by examiner

FIG. 1

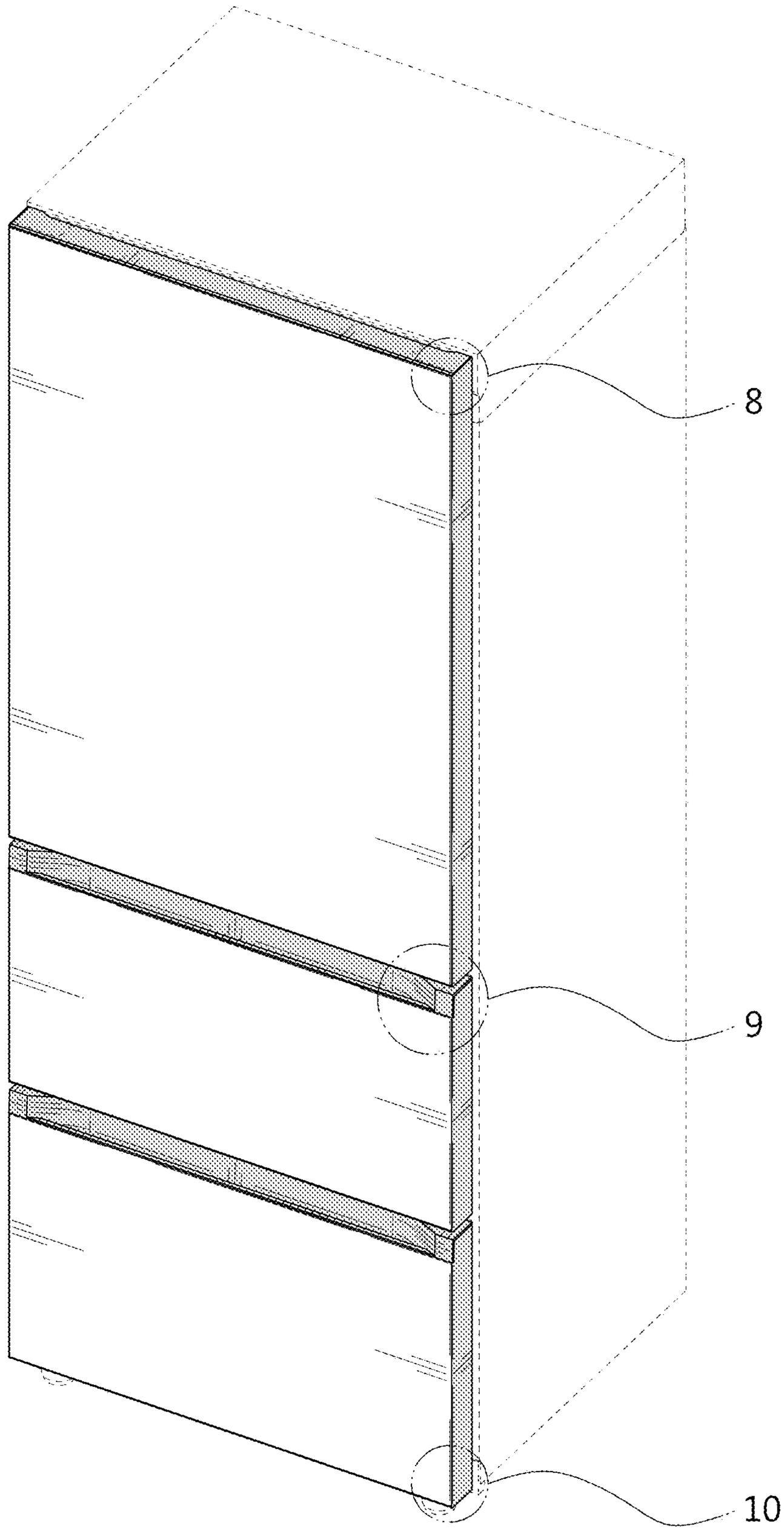

FIG. 2

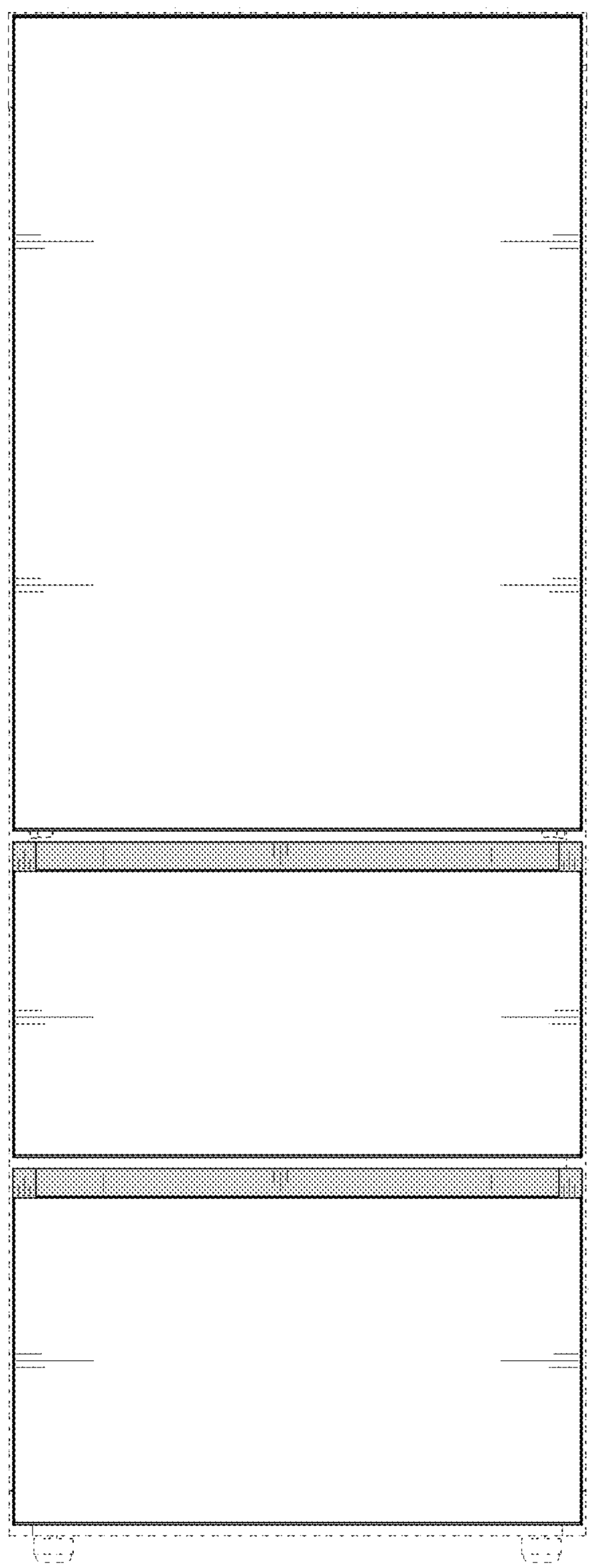

FIG. 3

FIG. 4

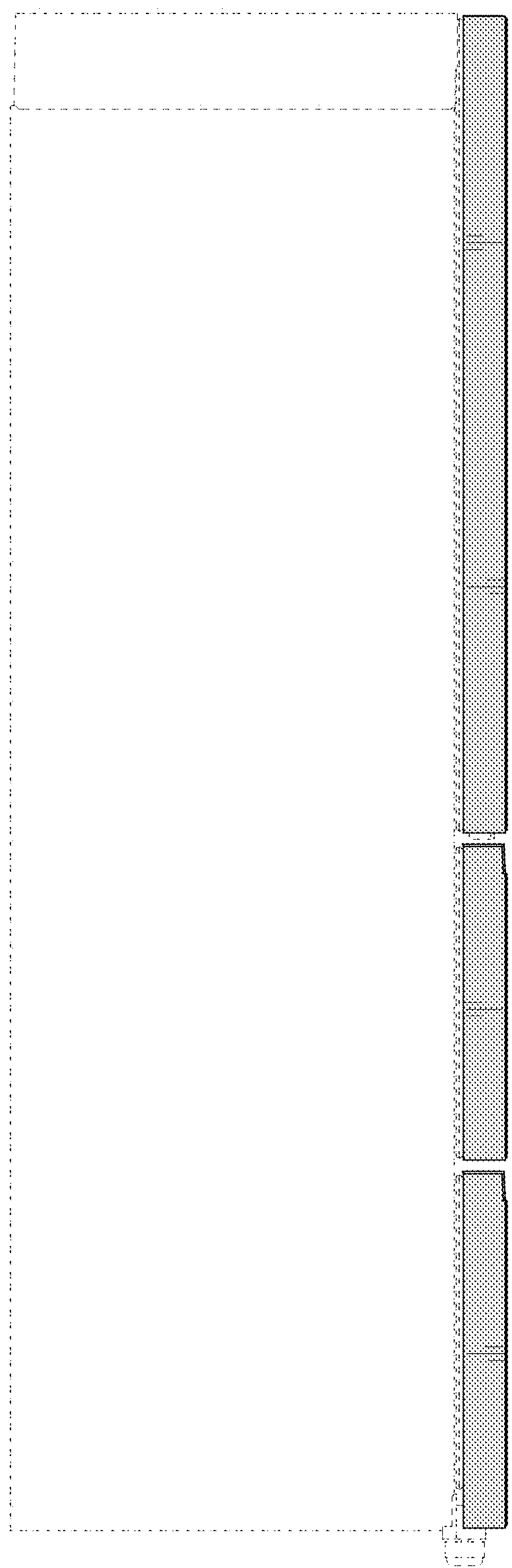

FIG. 5

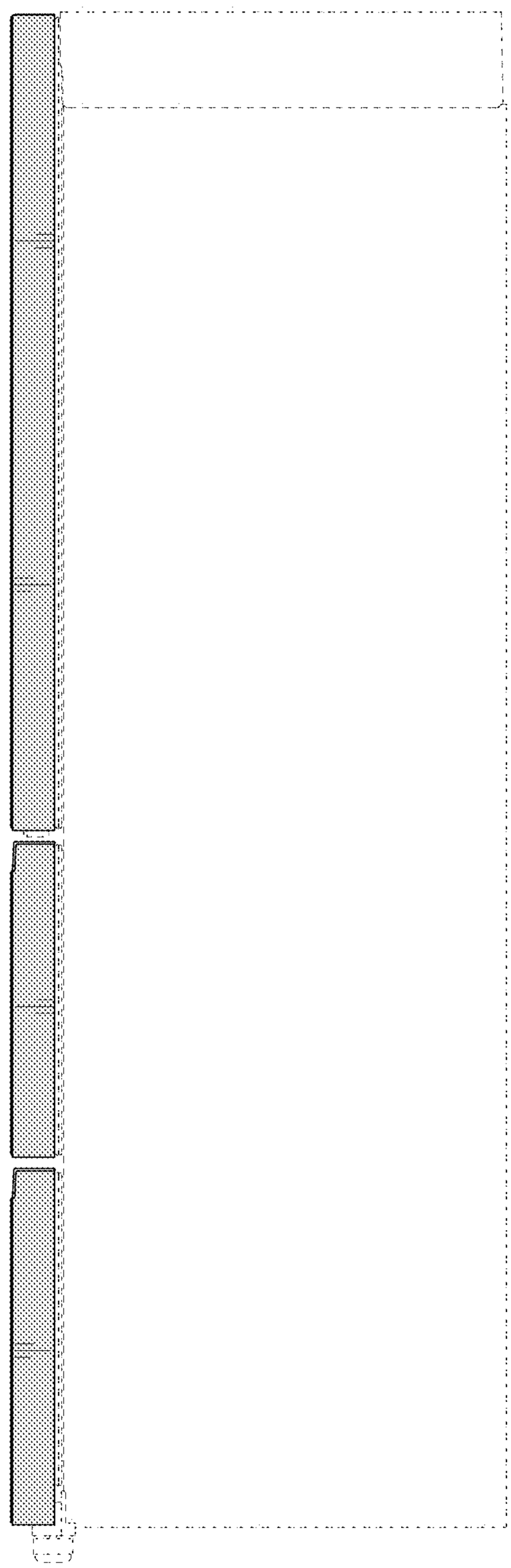

FIG. 6

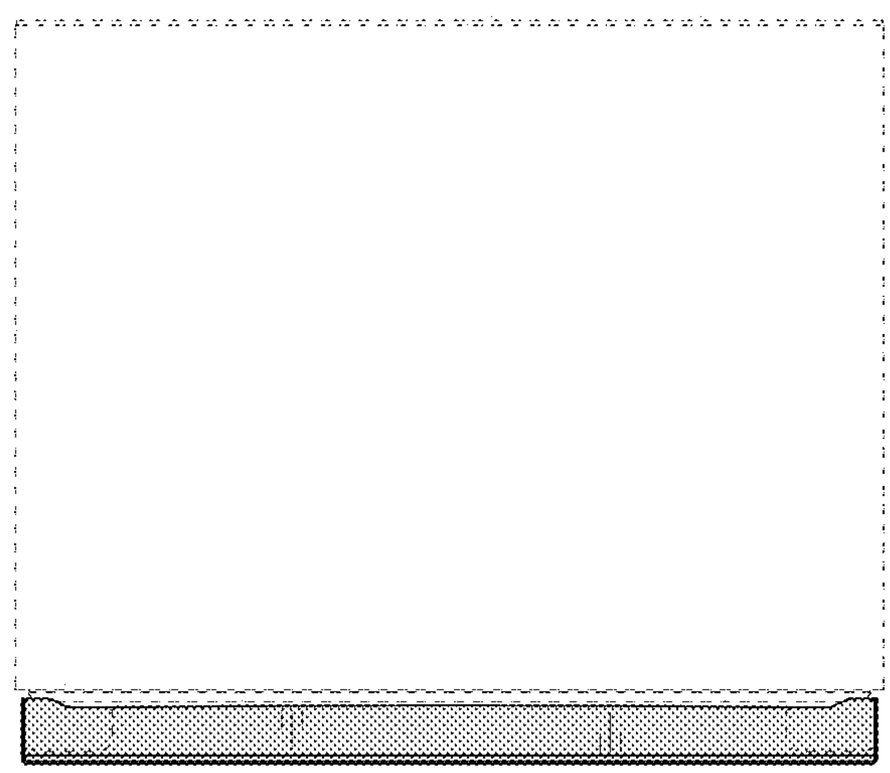

FIG. 7

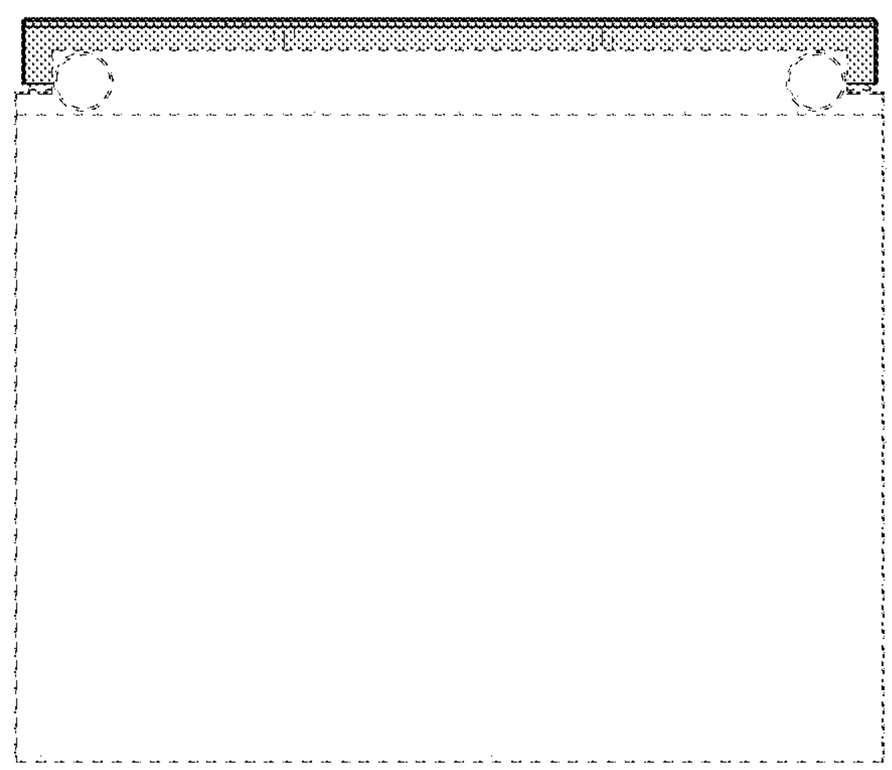

FIG. 8

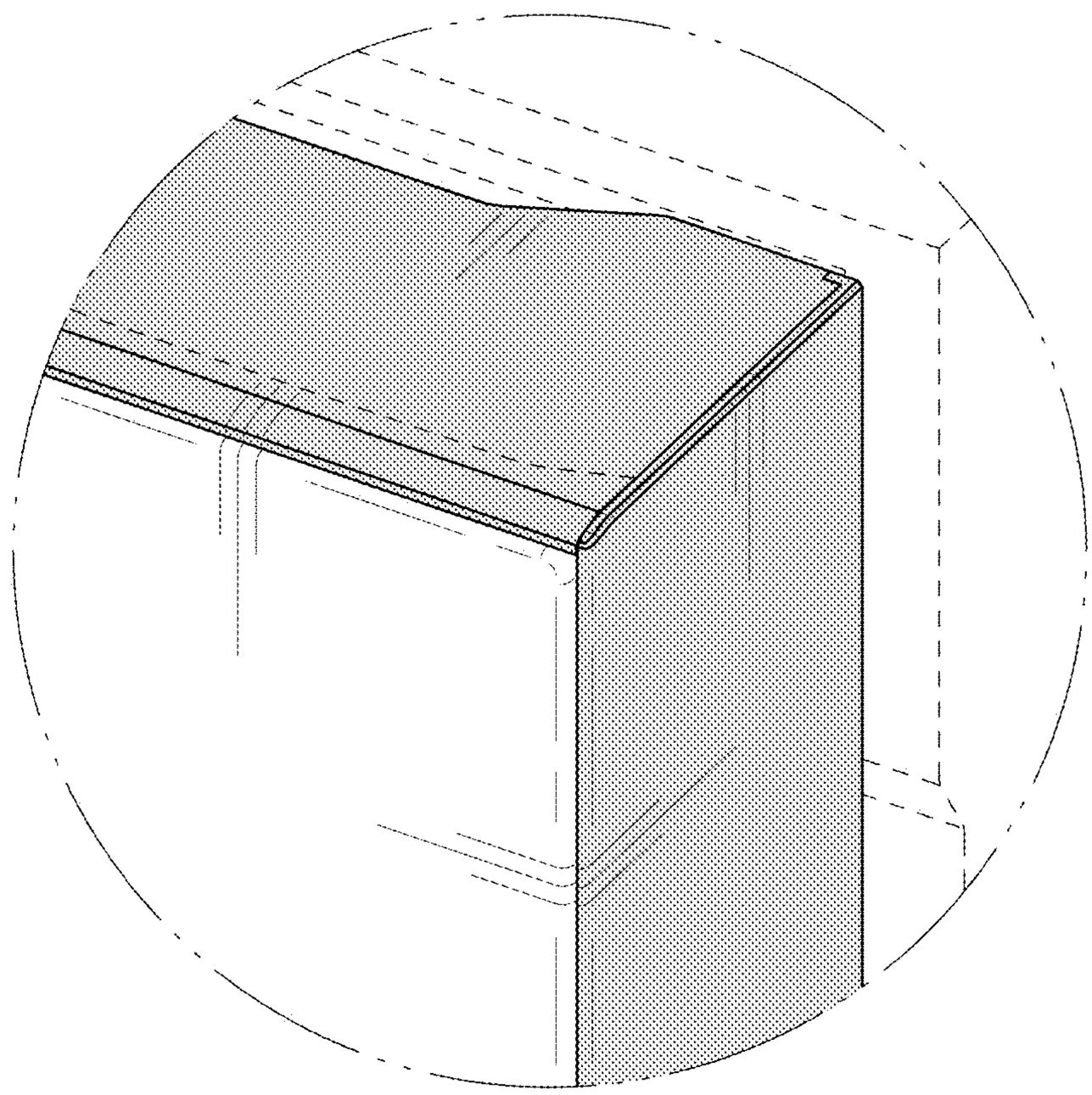

FIG. 9

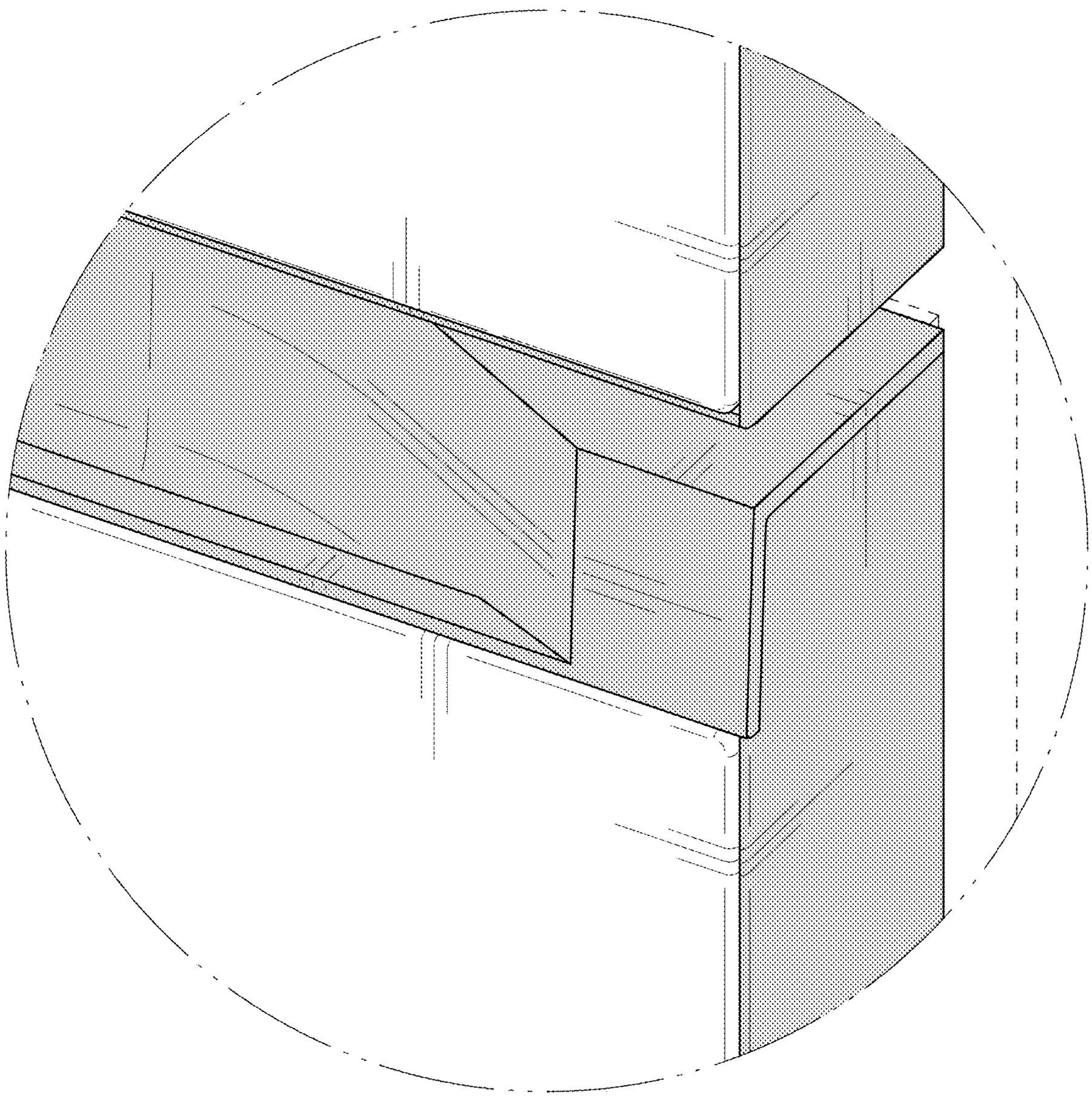

FIG. 10

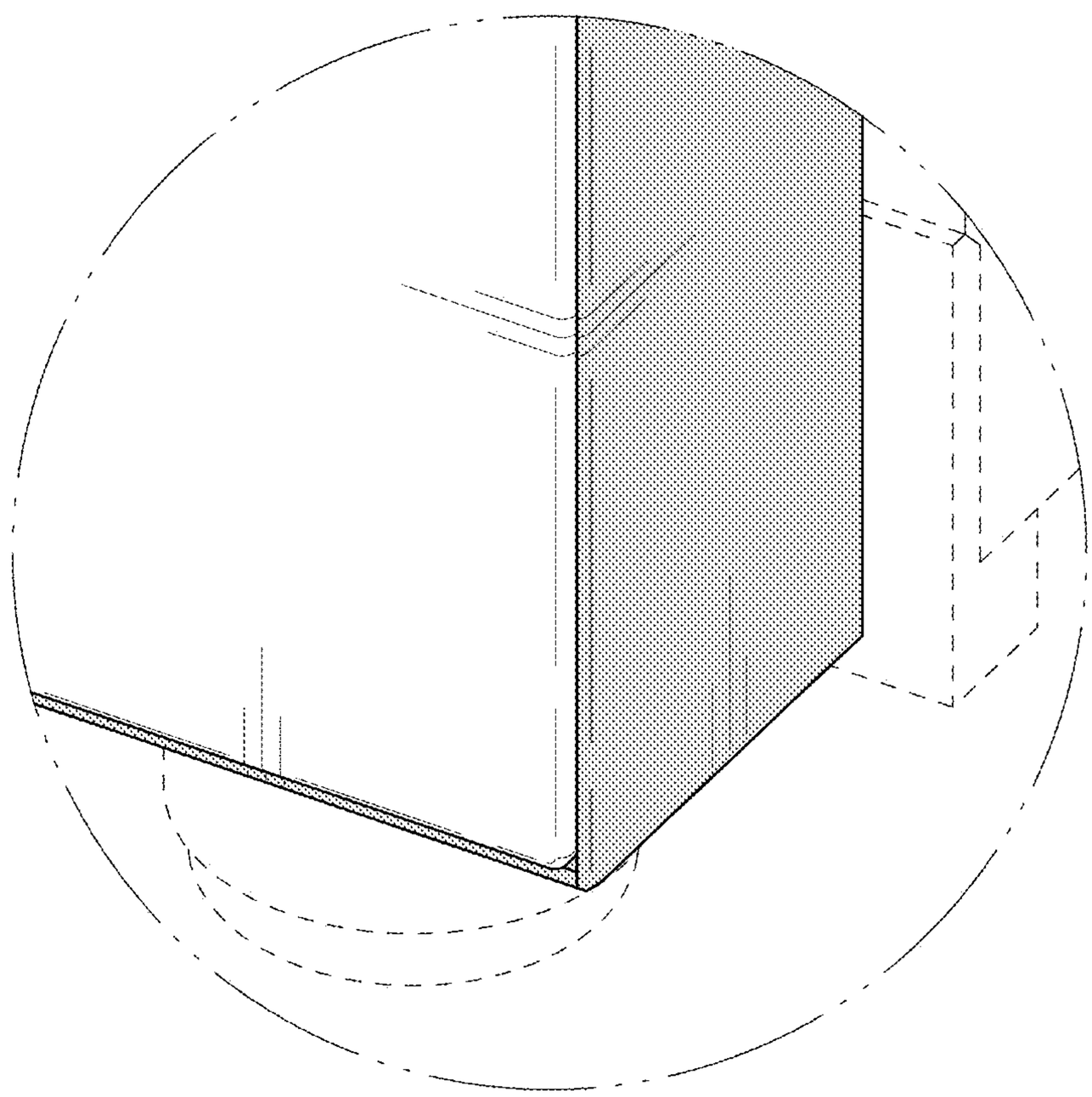

FIG. 11

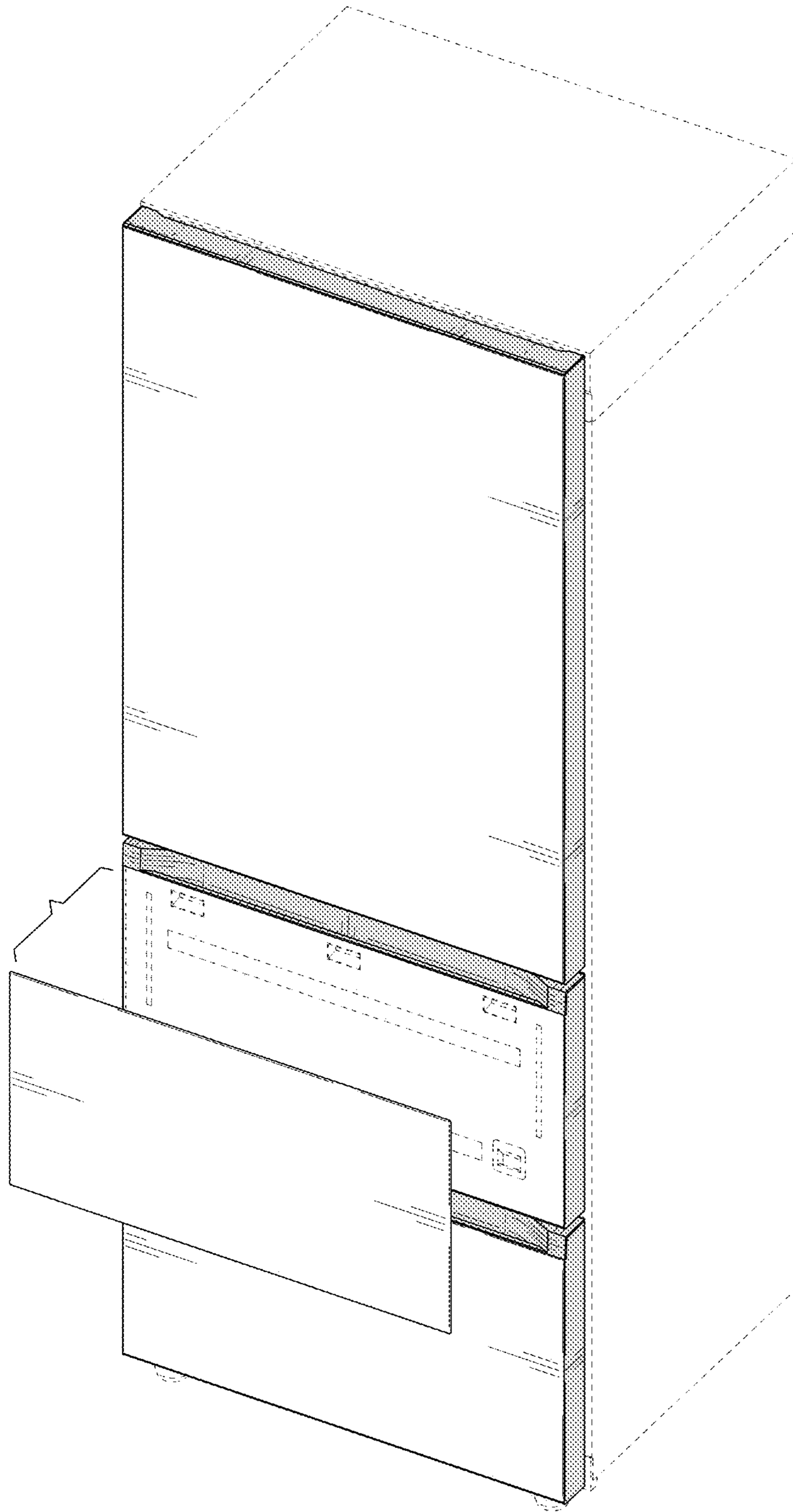

FIG. 12

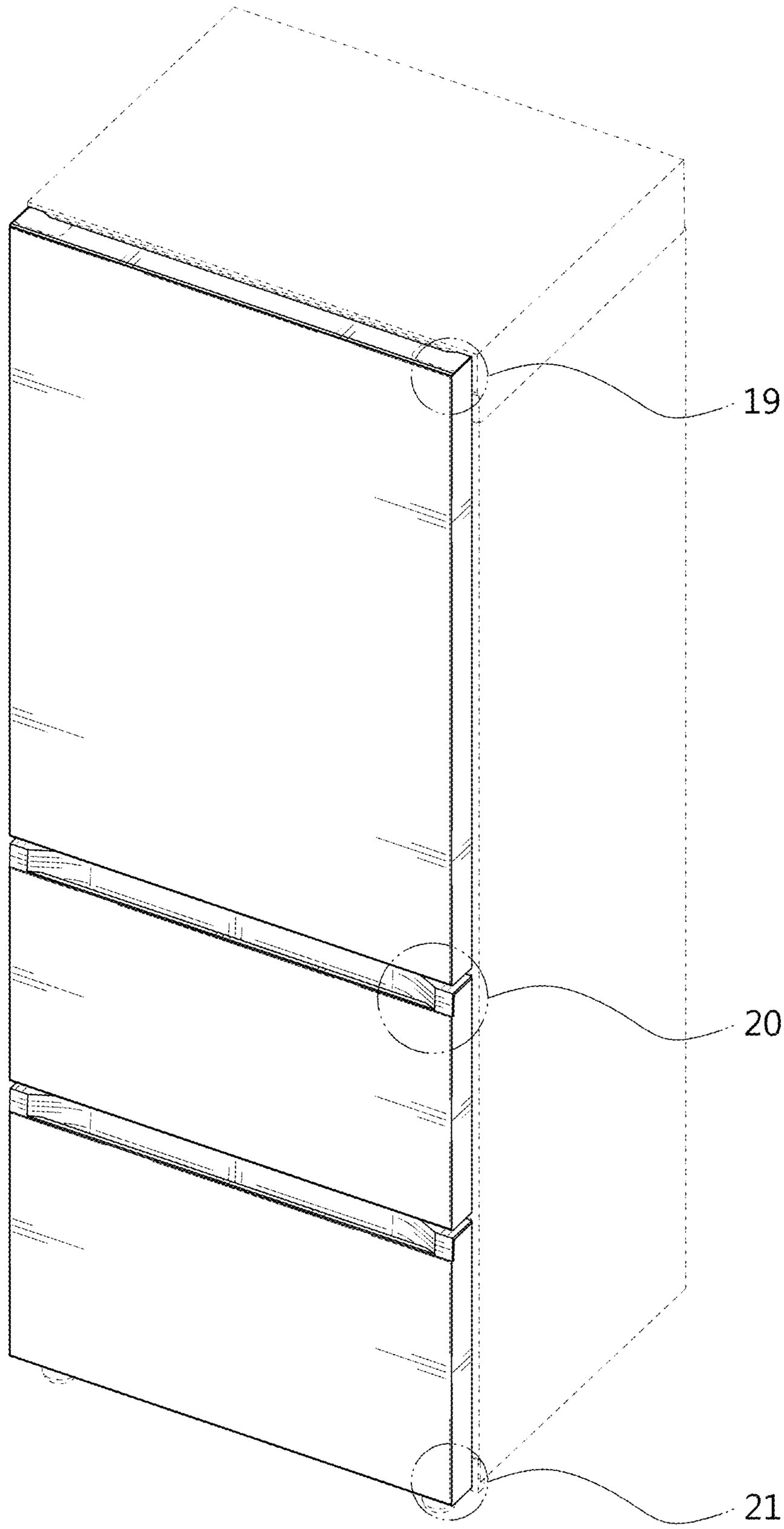

FIG. 13

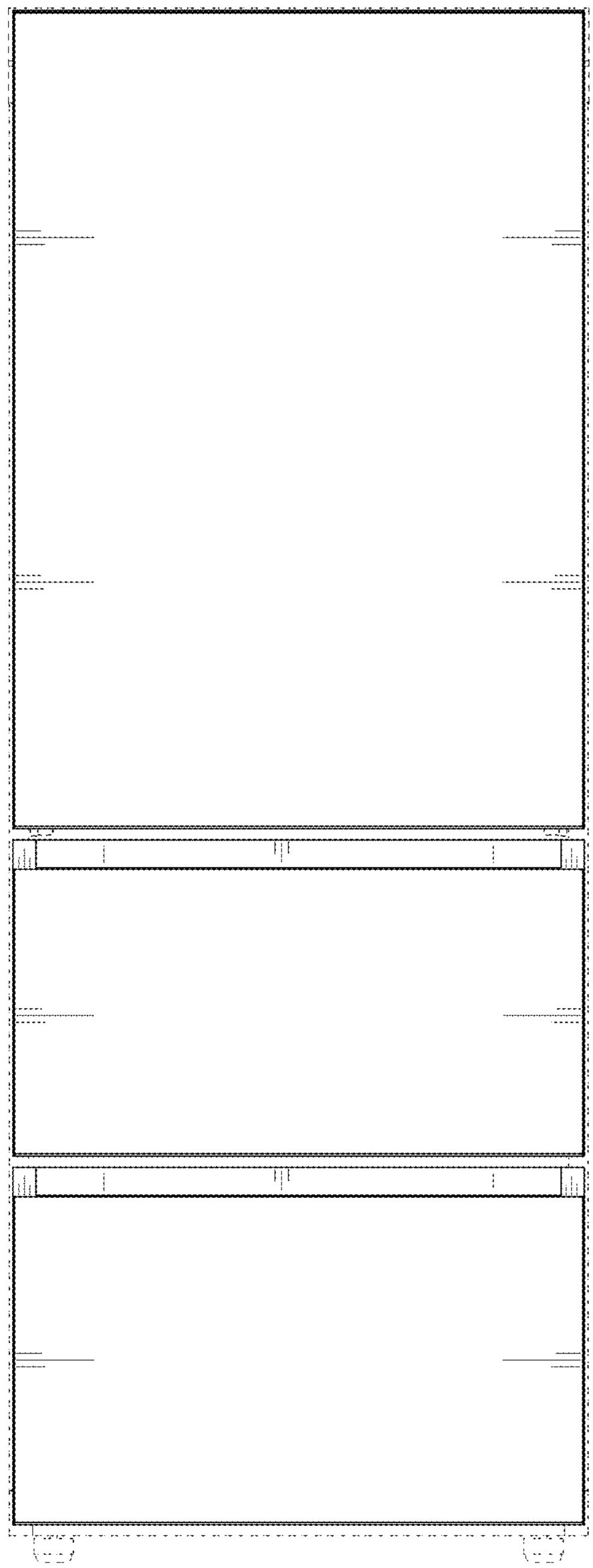

FIG. 14

FIG. 15

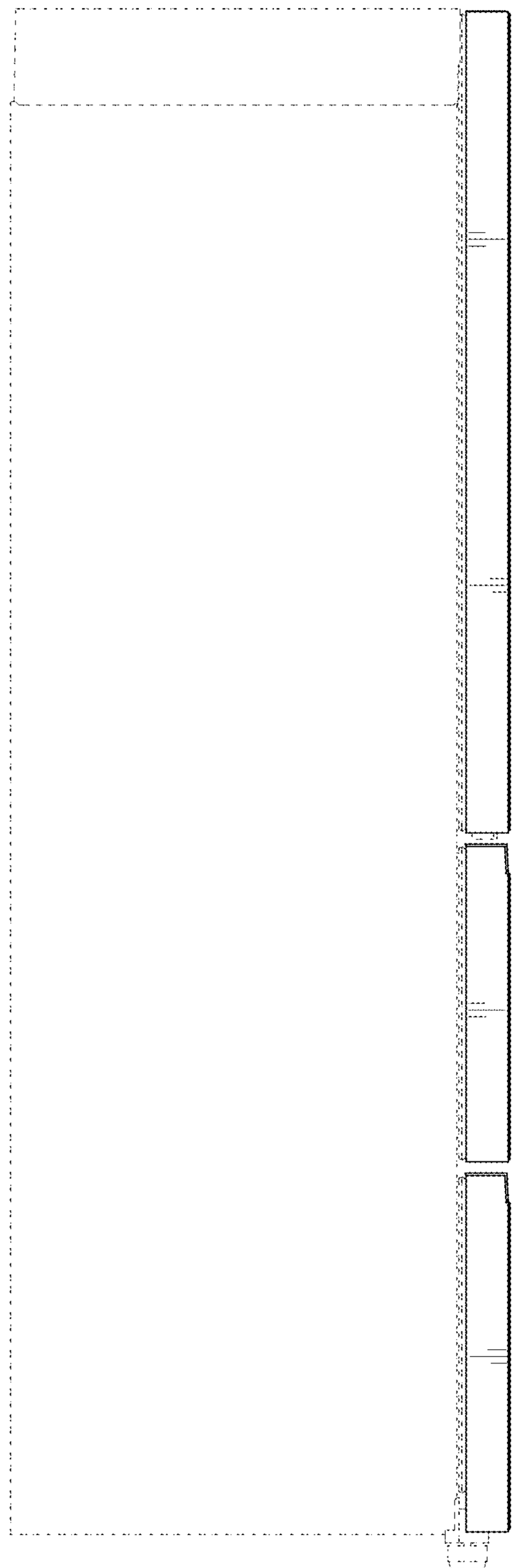

FIG. 16

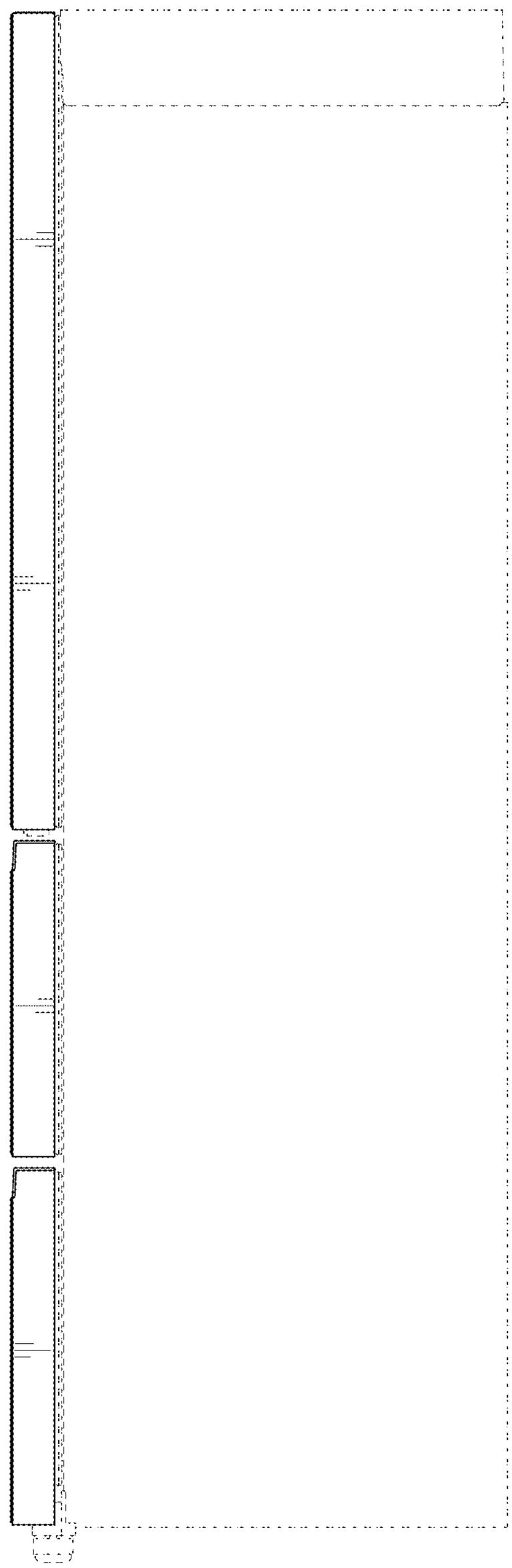

FIG. 17

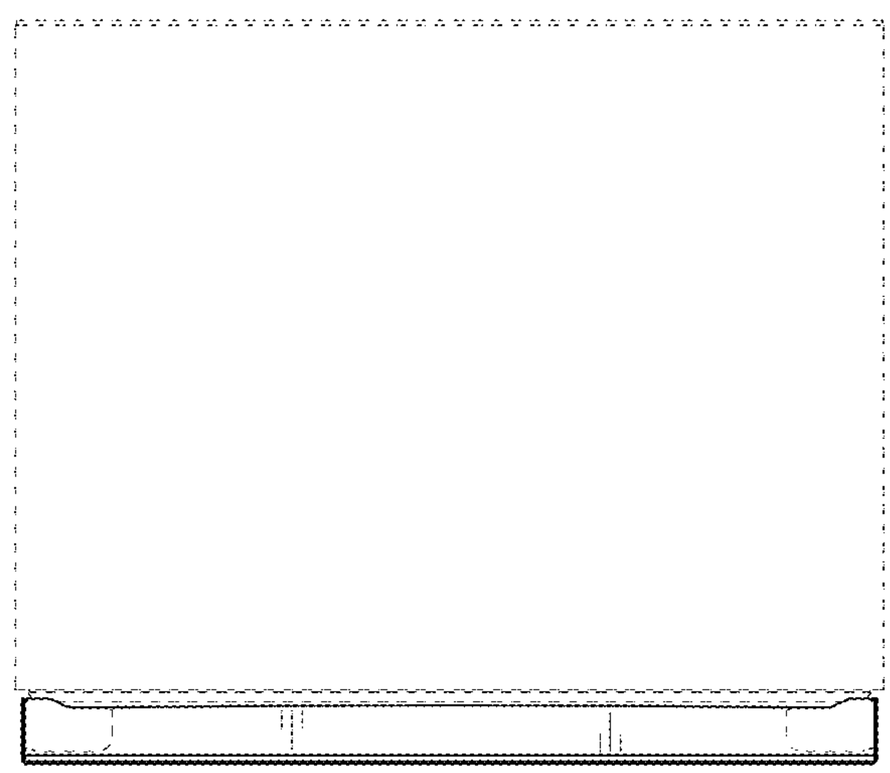

FIG. 18

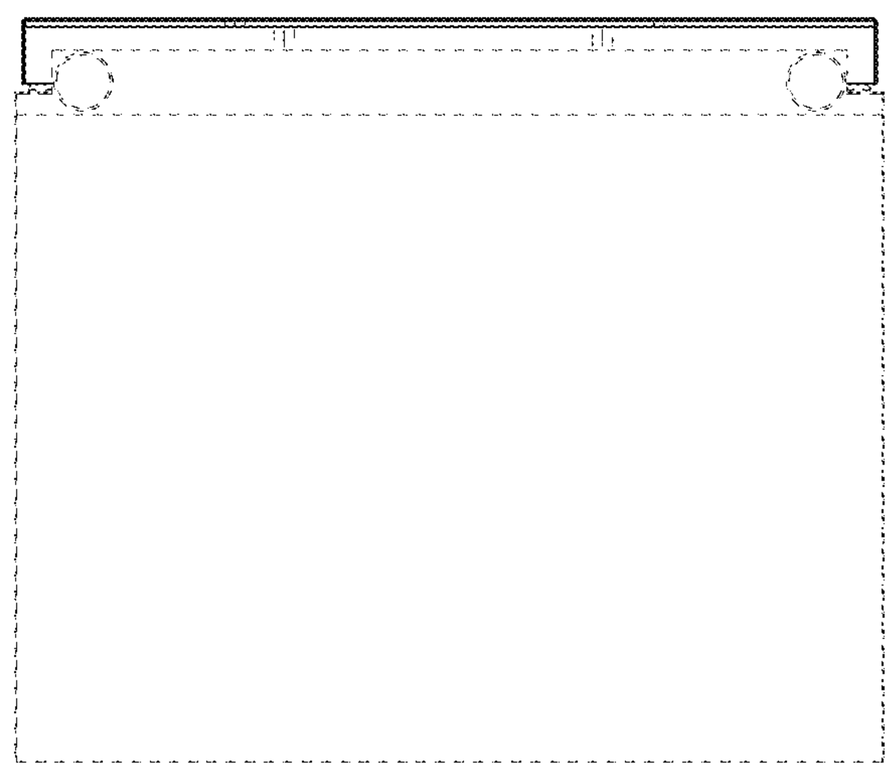

FIG. 19

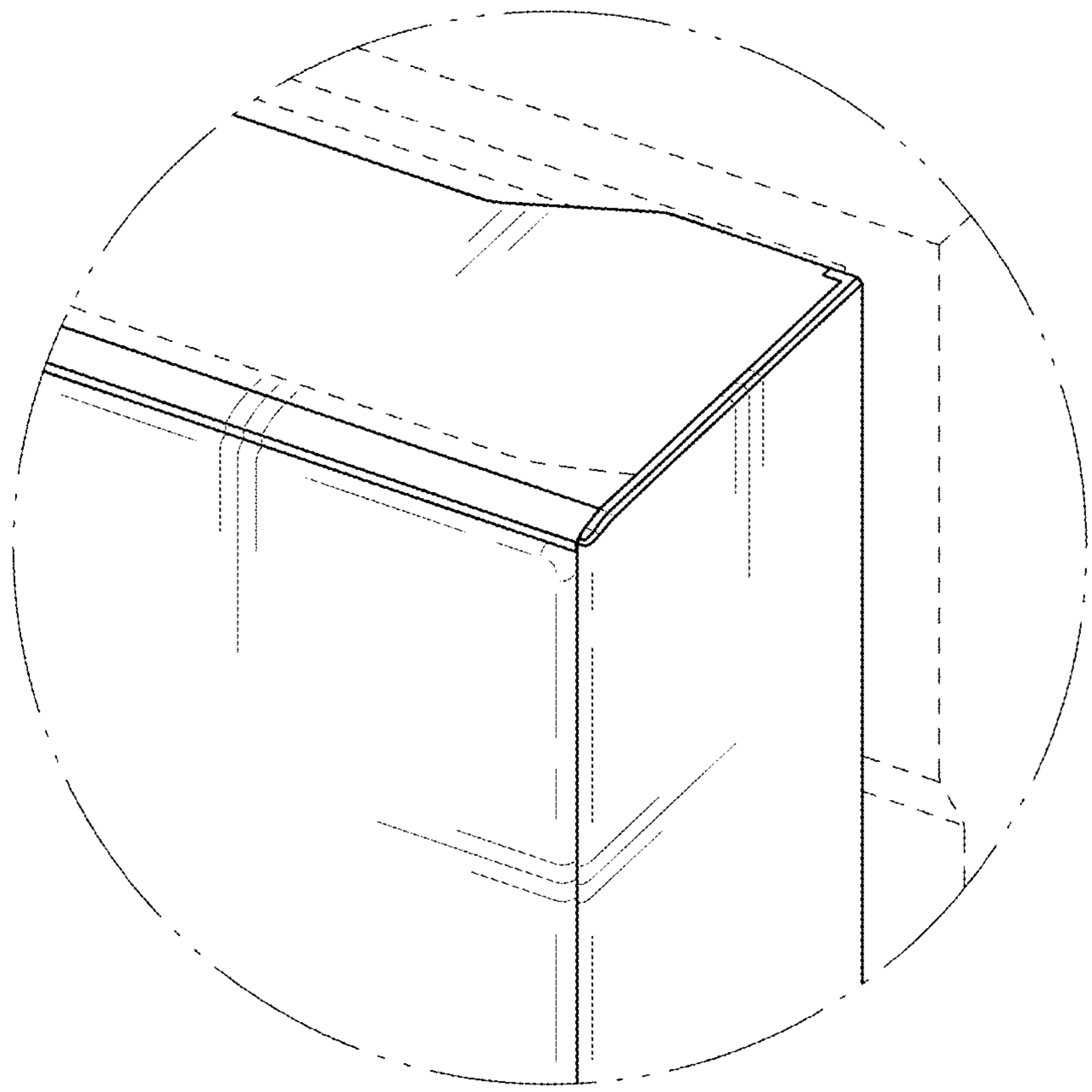

FIG. 20

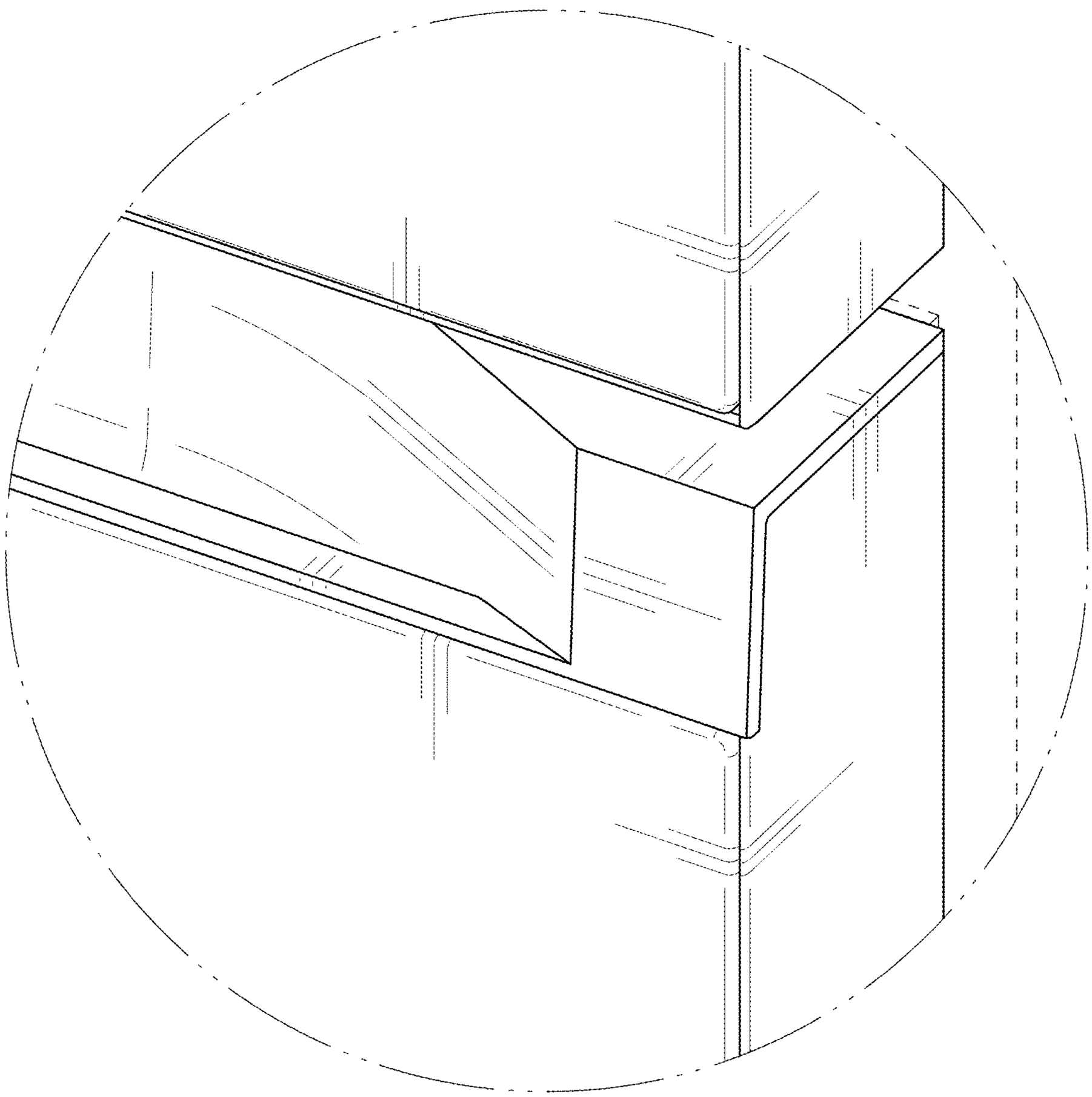

FIG. 21

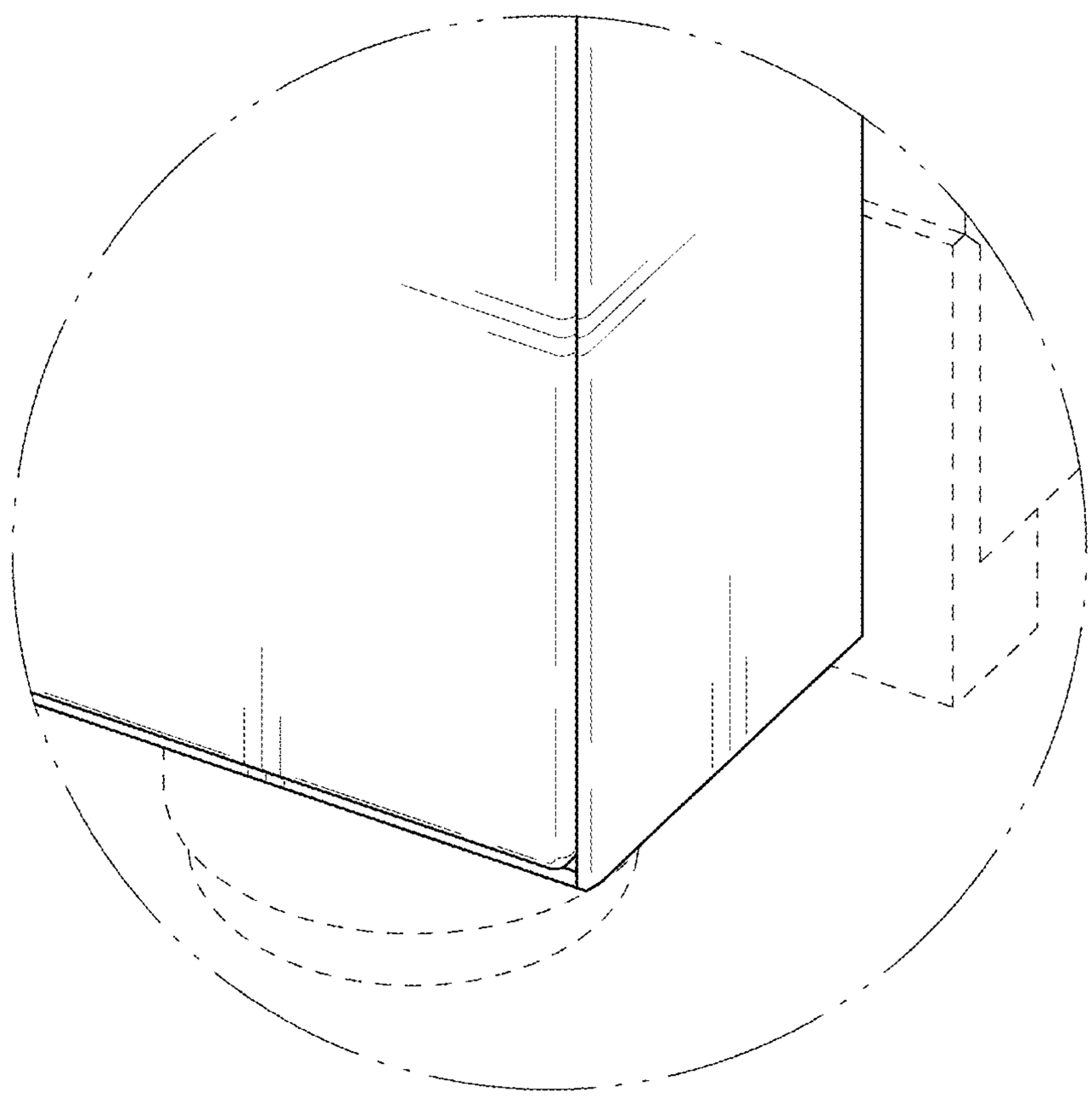
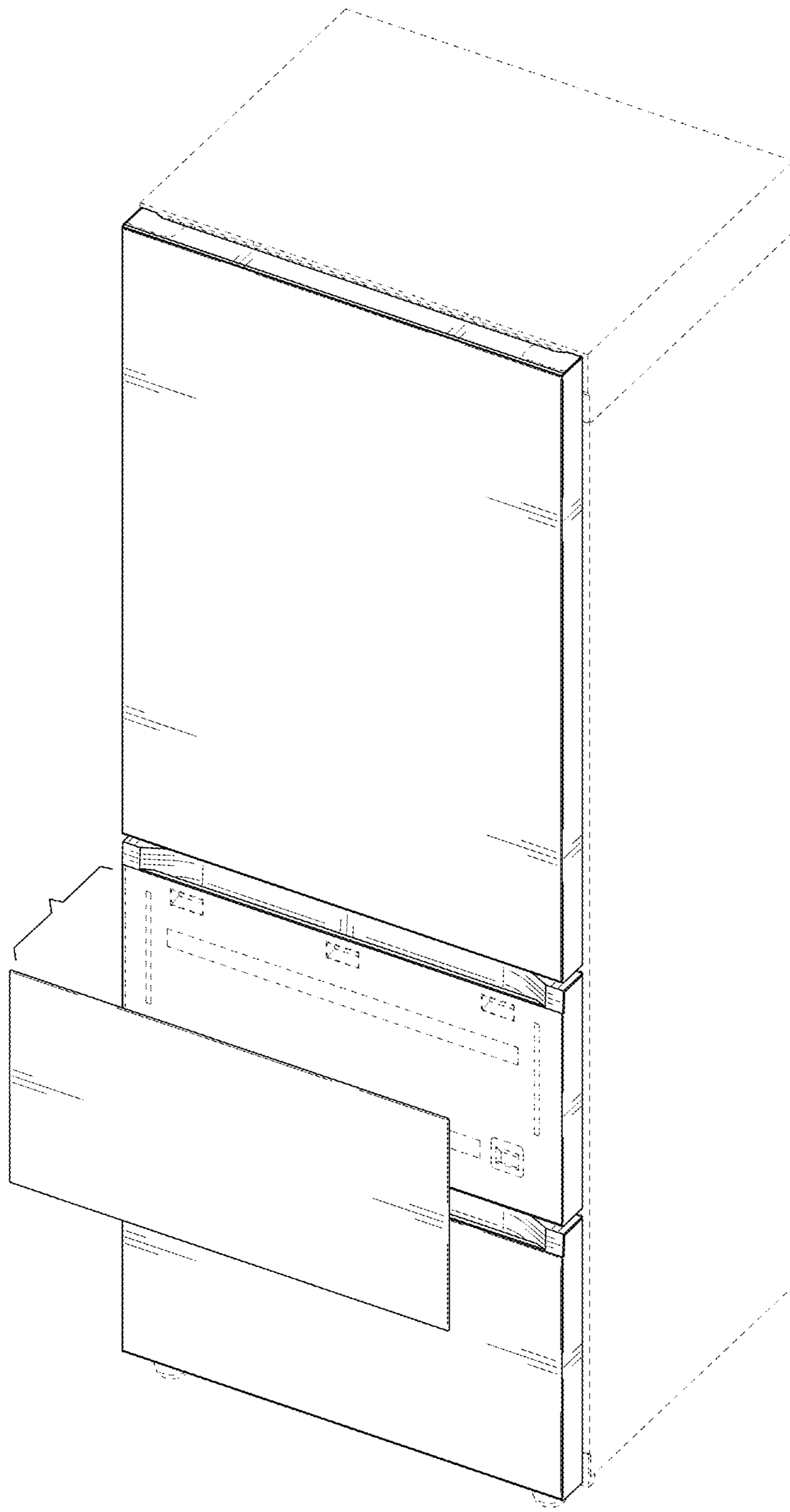
FIG. 22