US00D920244S

(12) United States Design Patent

Tachibana et al.

(10) Patent No.: US D920,244 S
(45) Date of Patent: ** May 25, 2021

(54) **INVERTER**

(71) Applicant: **Mitsubishi Electric Corporation**, Tokyo (JP)

(72) Inventors: **Atsuki Tachibana**, Tokyo (JP); **Tetsuo Tanaka**, Tokyo (JP); **Hidenori Suzuki**, Tokyo (JP); **Yoshiki Takahara**, Tokyo (JP); **Atsuhiro Tsuchiya**, Tokyo (JP)

(73) Assignee: **Mitsubishi Electric Corporation**, Tokyo (JP)

(**) Term: **15 Years**

(21) Appl. No.: **29/771,326**

(22) Filed: **Feb. 22, 2021**

Related U.S. Application Data

(62) Division of application No. 29/722,815, filed on Jan. 31, 2020.

(30) **Foreign Application Priority Data**

Sep. 9, 2019 (JP) 2019-020080
Sep. 9, 2019 (JP) 2019-020081

(51) **LOC (13) Cl.** **13-02**

(52) **U.S. Cl.**
USPC **D13/110**

(58) **Field of Classification Search**
USPC D13/110, 101, 123, 158, 162, 164, 184, D13/199; D15/149
CPC H02M 7/00; H02M 7/02; H02M 7/003; H05K 5/00; H05K 5/02; H05K 5/03; H05K 5/0017; H05K 7/00; H05K 7/1427; H05K 7/20918
See application file for complete search history.

(56) **References Cited**

U.S. PATENT DOCUMENTS

4,620,263	A		10/1986	Ito	
D303,372	S	*	9/1989	Kondo	D13/110
D318,845	S	*	8/1991	Plumeret	D13/123
5,497,289	A		3/1996	Sugishima et al.	
D372,017	S		7/1996	Suematsu et al.	
D438,176	S	*	2/2001	Cornu	D13/162
D449,817	S	*	10/2001	Takeuchi	D13/110
D455,399	S		4/2002	Imamura et al.	
D455,714	S	*	4/2002	Kim	D13/110
D457,492	S	*	5/2002	Kim	D13/110
D494,132	S		8/2004	Song	
D502,914	S	*	3/2005	Higuchi	D13/110
D502,916	S	*	3/2005	Higuchi	D13/110
D541,744	S	*	5/2007	Virolainen	D13/110
D558,141	S		12/2007	Kwon	
D569,795	S		5/2008	Higuchi	
D675,565	S		2/2013	Choi	

(Continued)

Primary Examiner — Derrick E Holland
(74) *Attorney, Agent, or Firm* — Studebaker & Brackett PC

(57) **CLAIM**

The ornamental design for an inverter, as shown and described.

DESCRIPTION

FIG. **1**. is a front perspective view of the front, right, and top sides of an inverter showing our new design;
FIG. **2**. is a rear perspective view of the rear, left, and bottom sides thereof;
FIG. **3**. is a front view thereof;
FIG. **4**. is a rear view thereof;
FIG. **5**. is a top plan view thereof;
FIG. **6**. is a bottom plan view thereof;
FIG. **7**. is a right side view thereof;
FIG. **8**. is a left side view thereof; and,
FIG. **9**. is an enlarged view of a part **9** shown in FIG. **3**.
The dash-dot broken lines represent boundaries of the enlarged parts and form no part of the claimed design.

1 Claim, 9 Drawing Sheets

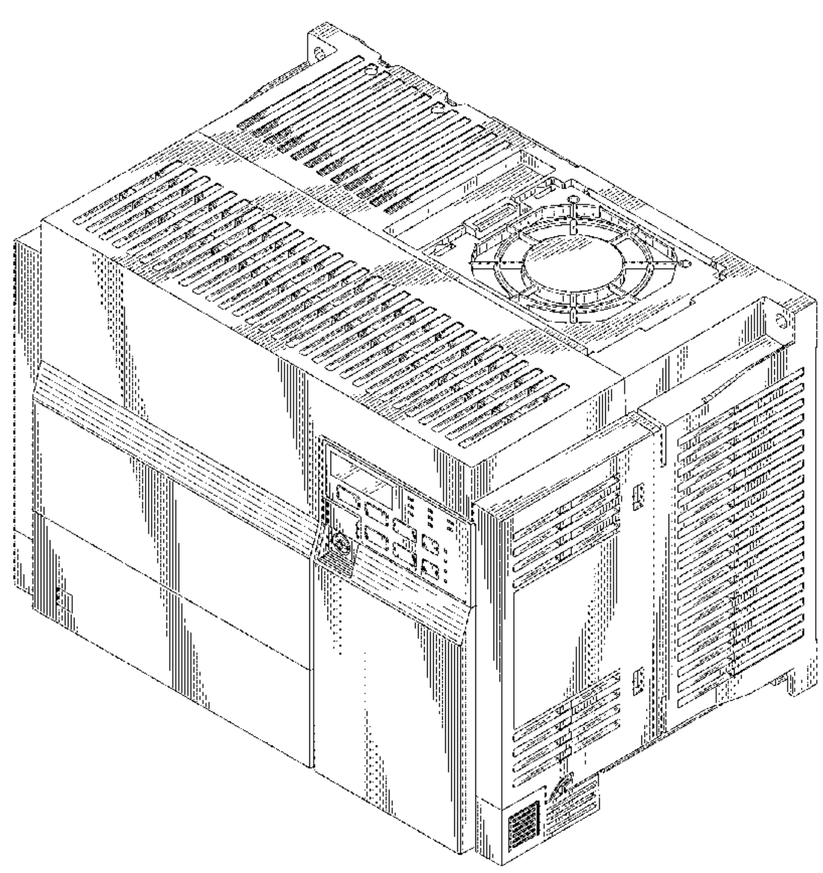

(56) **References Cited**

U.S. PATENT DOCUMENTS

D684,533	S	6/2013	Nakahira et al.	
D707,176	S	6/2014	Choi	
D745,847	S	12/2015	Ho et al.	
2010/0247301	A1*	9/2010	Hatozaki	H05K 7/20918 415/182.1
2012/0305744	A1*	12/2012	Chen	G06F 1/181 248/672
2017/0150654	A1*	5/2017	Kubo	H05K 7/20909

* cited by examiner

FIG. 1

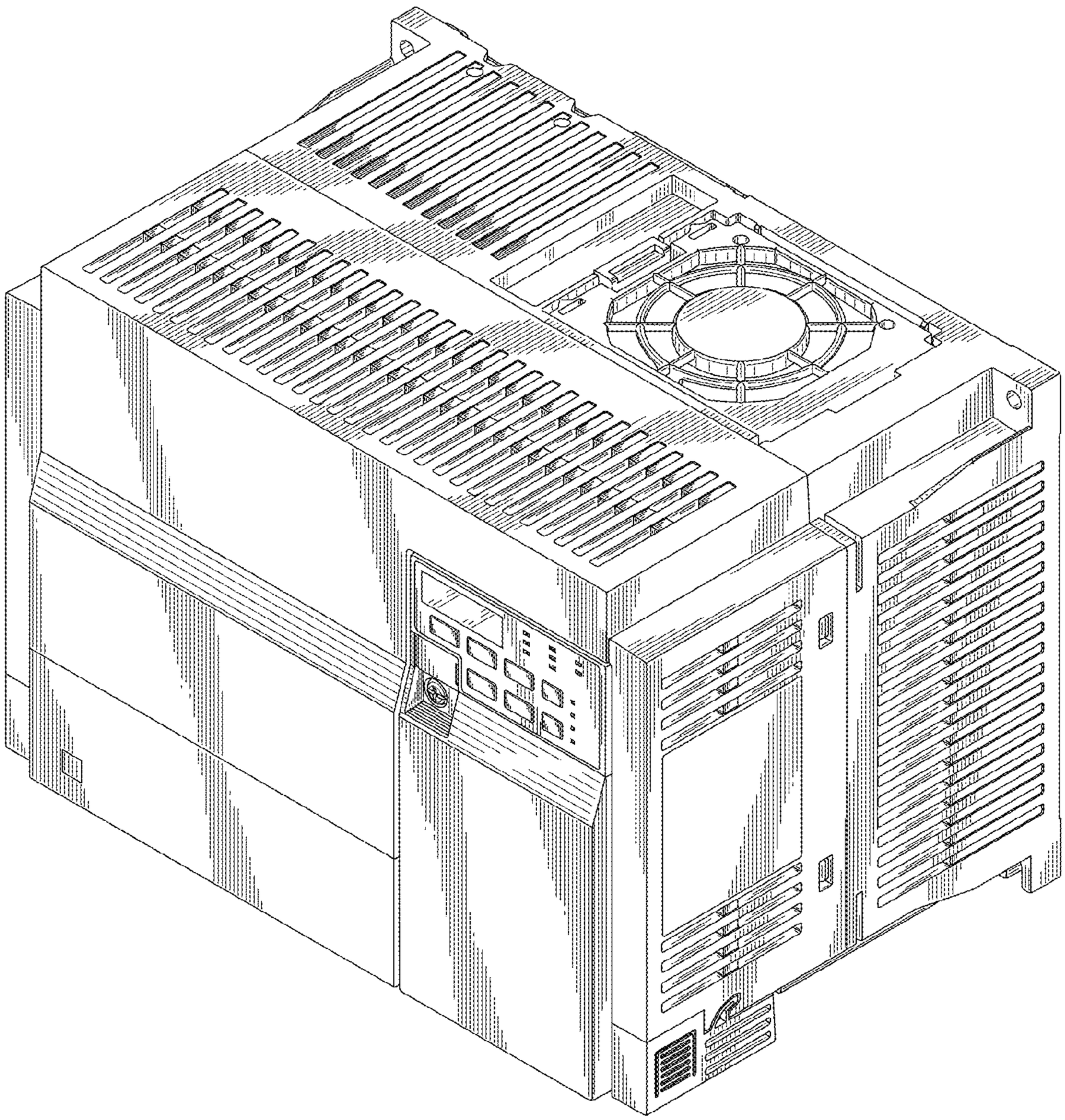

FIG.2

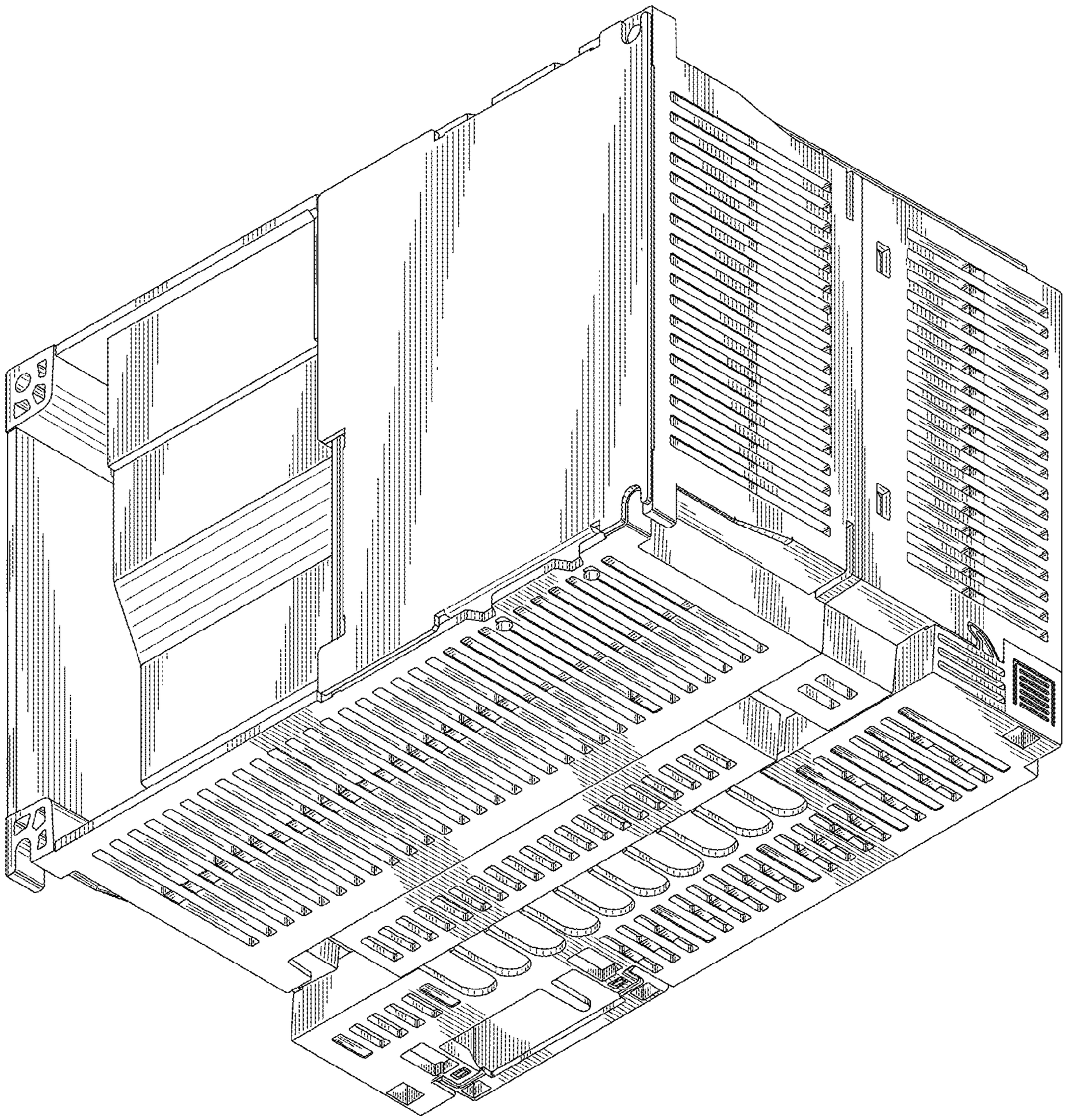

FIG. 3

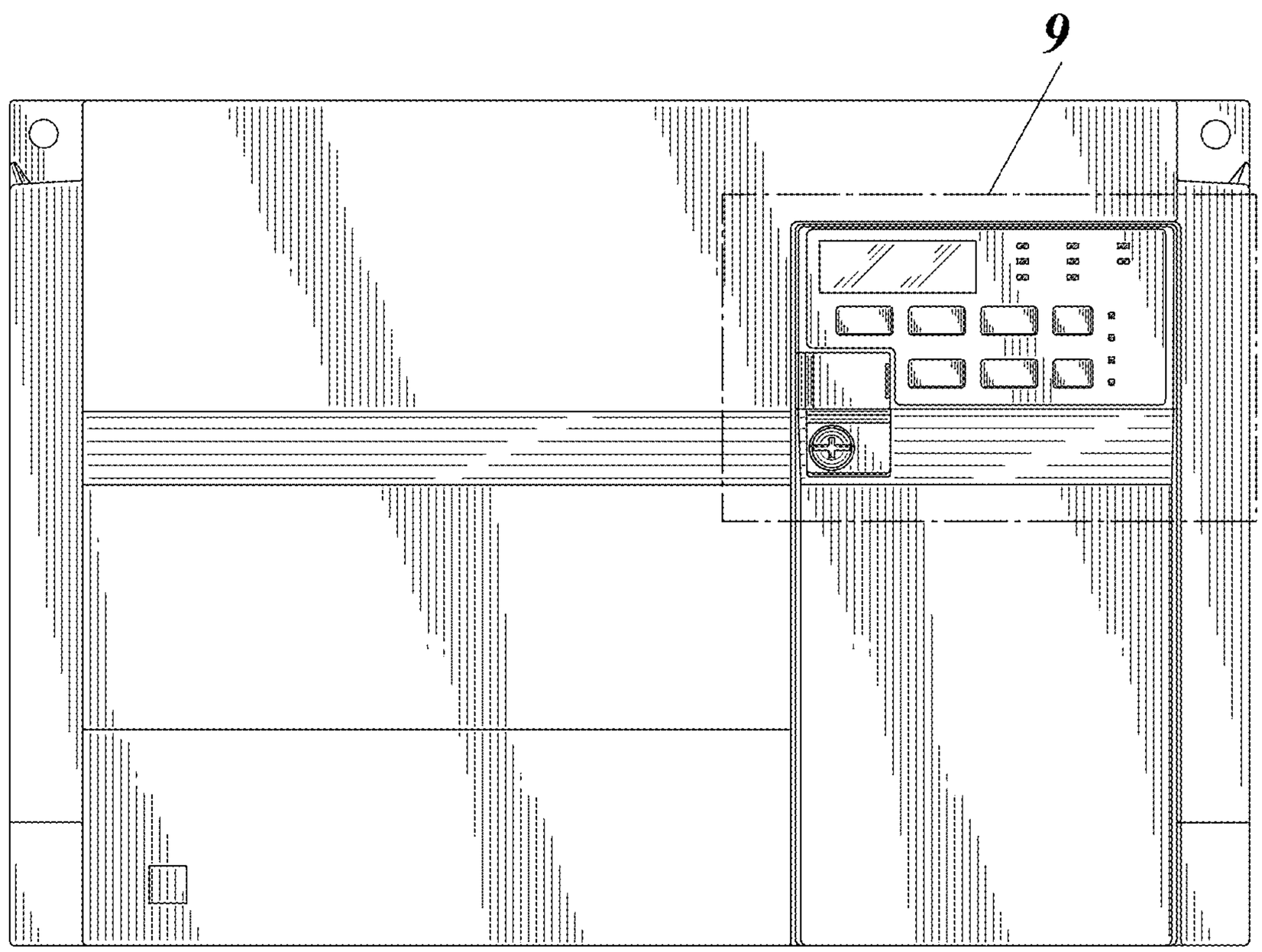

FIG. 4

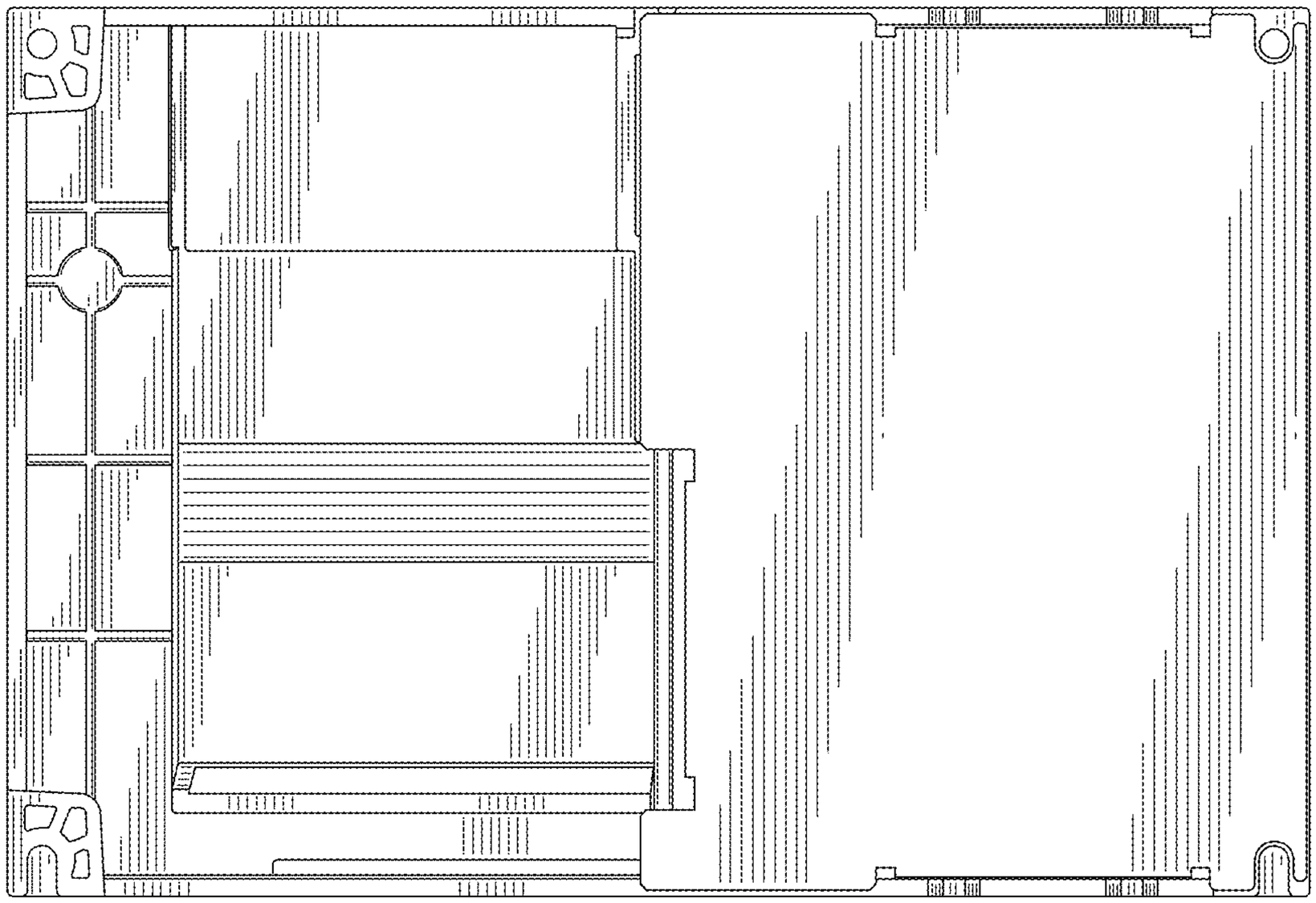

FIG. 5

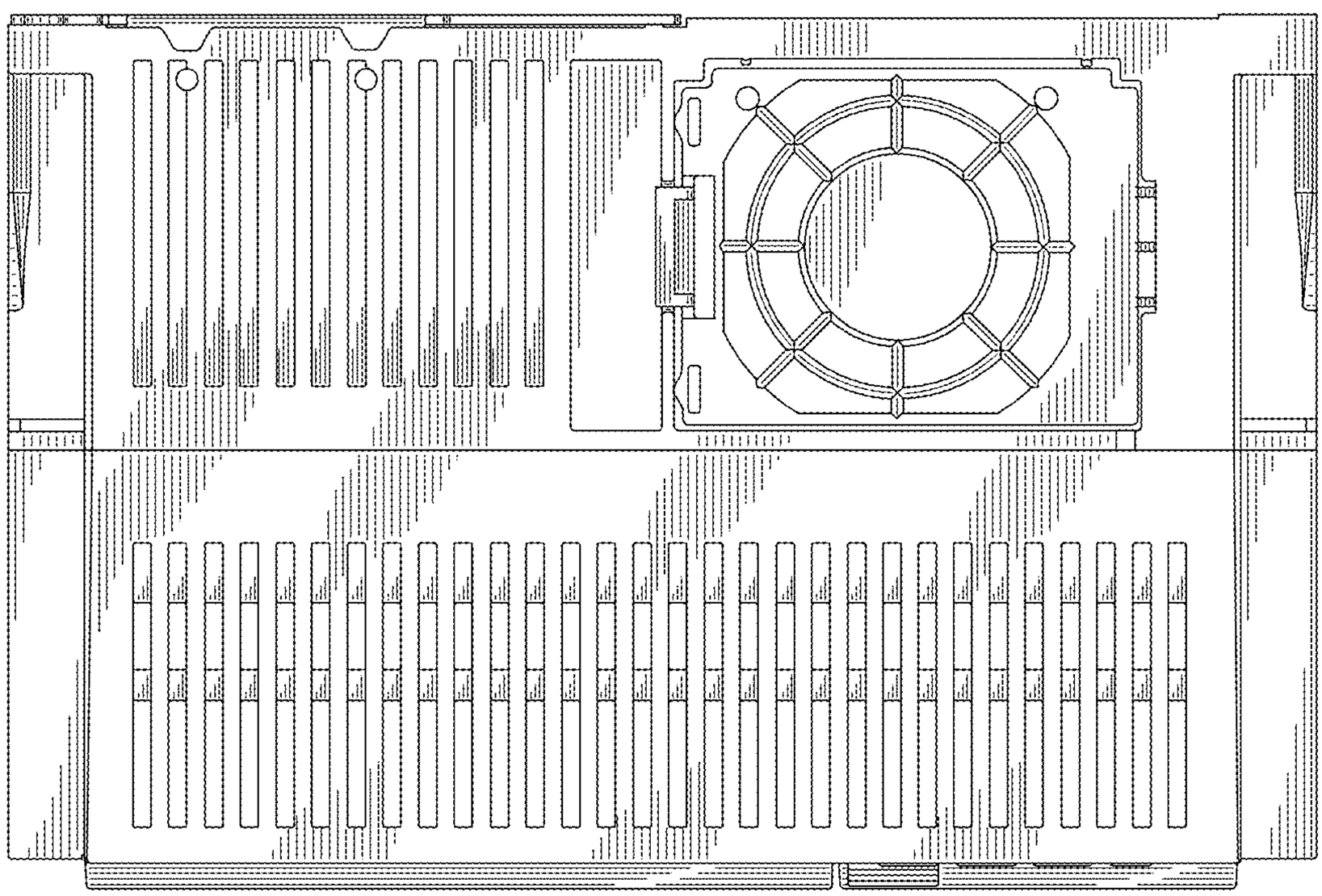

FIG. 6

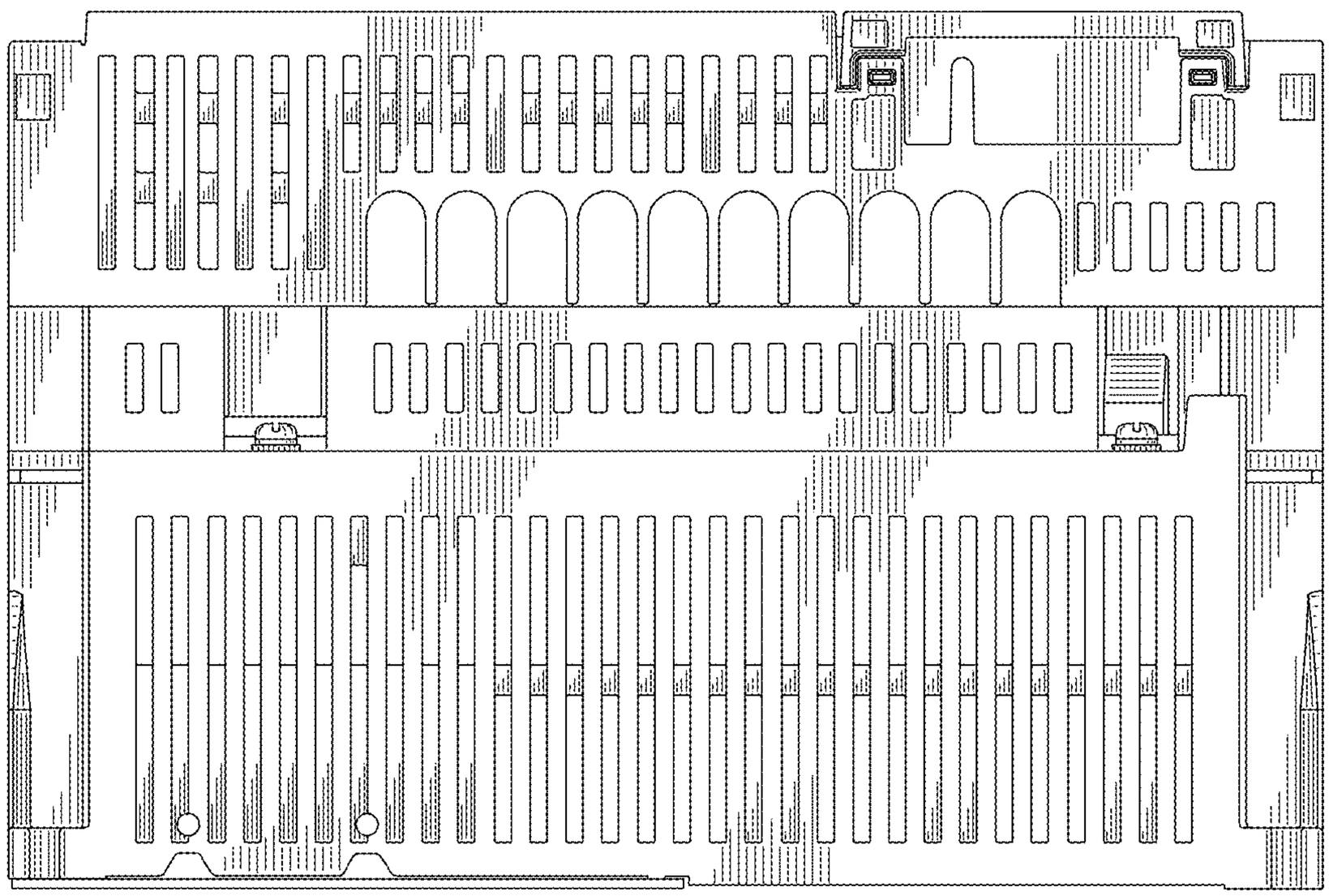

FIG. 7

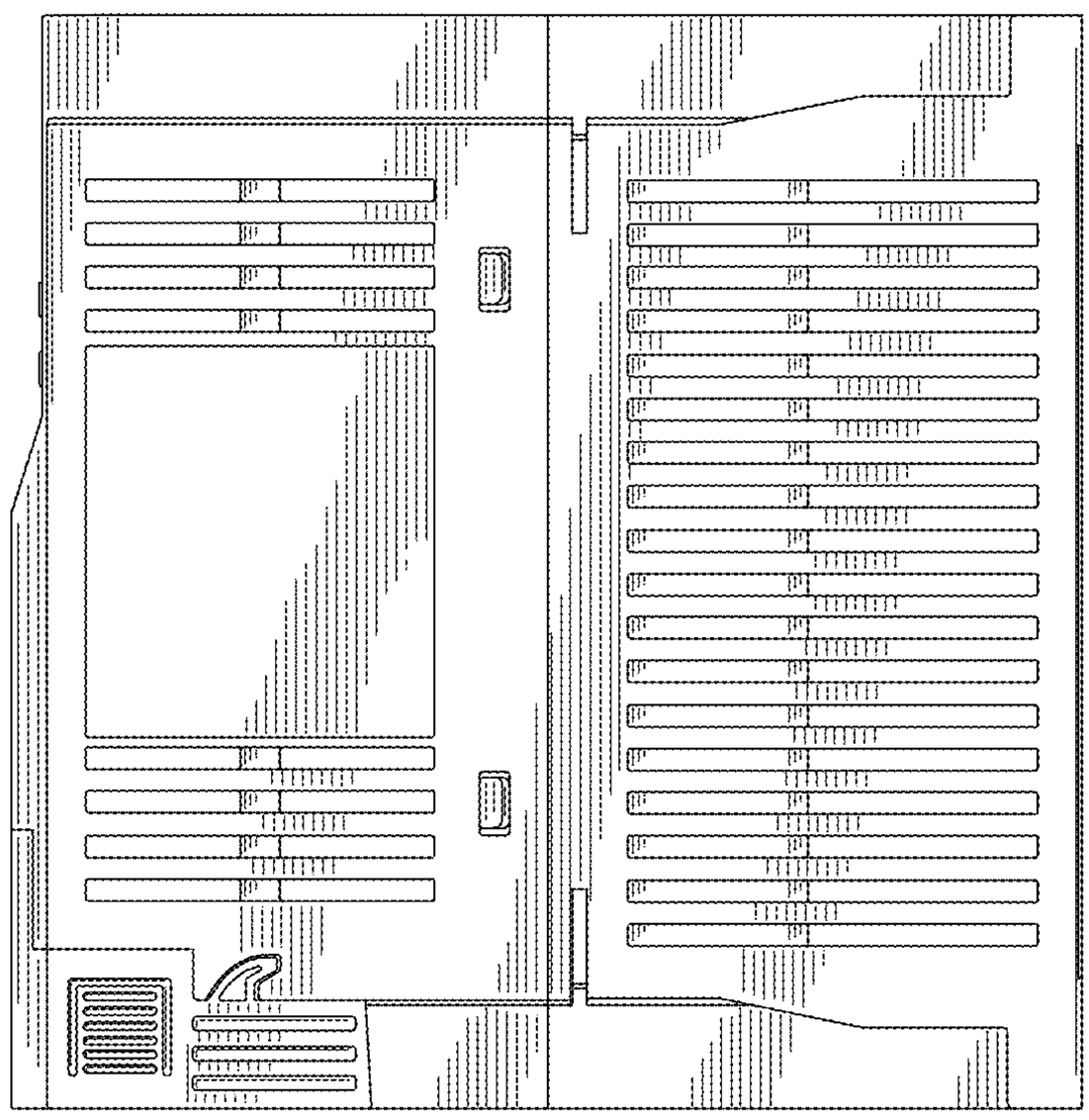

FIG. 8

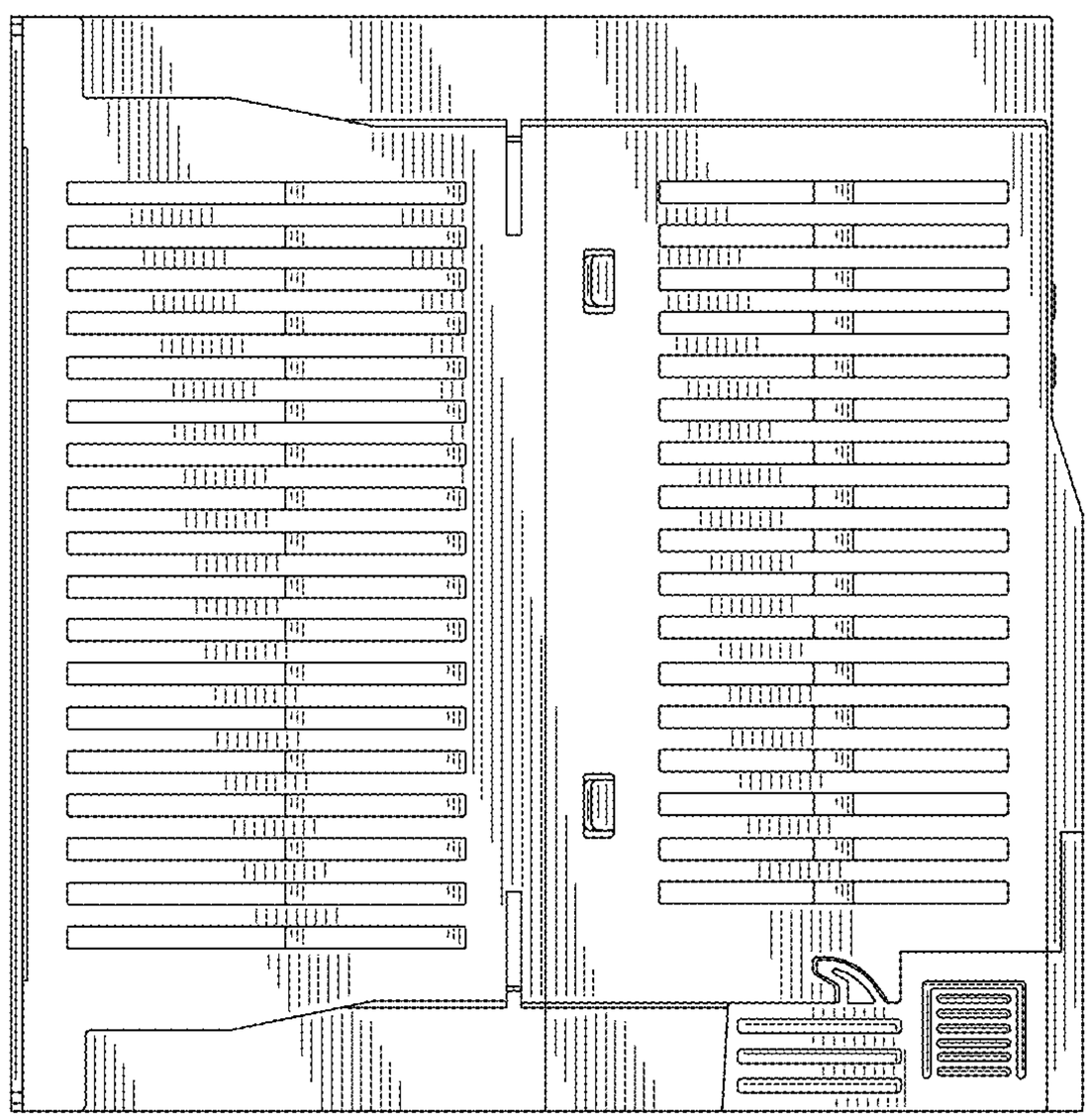
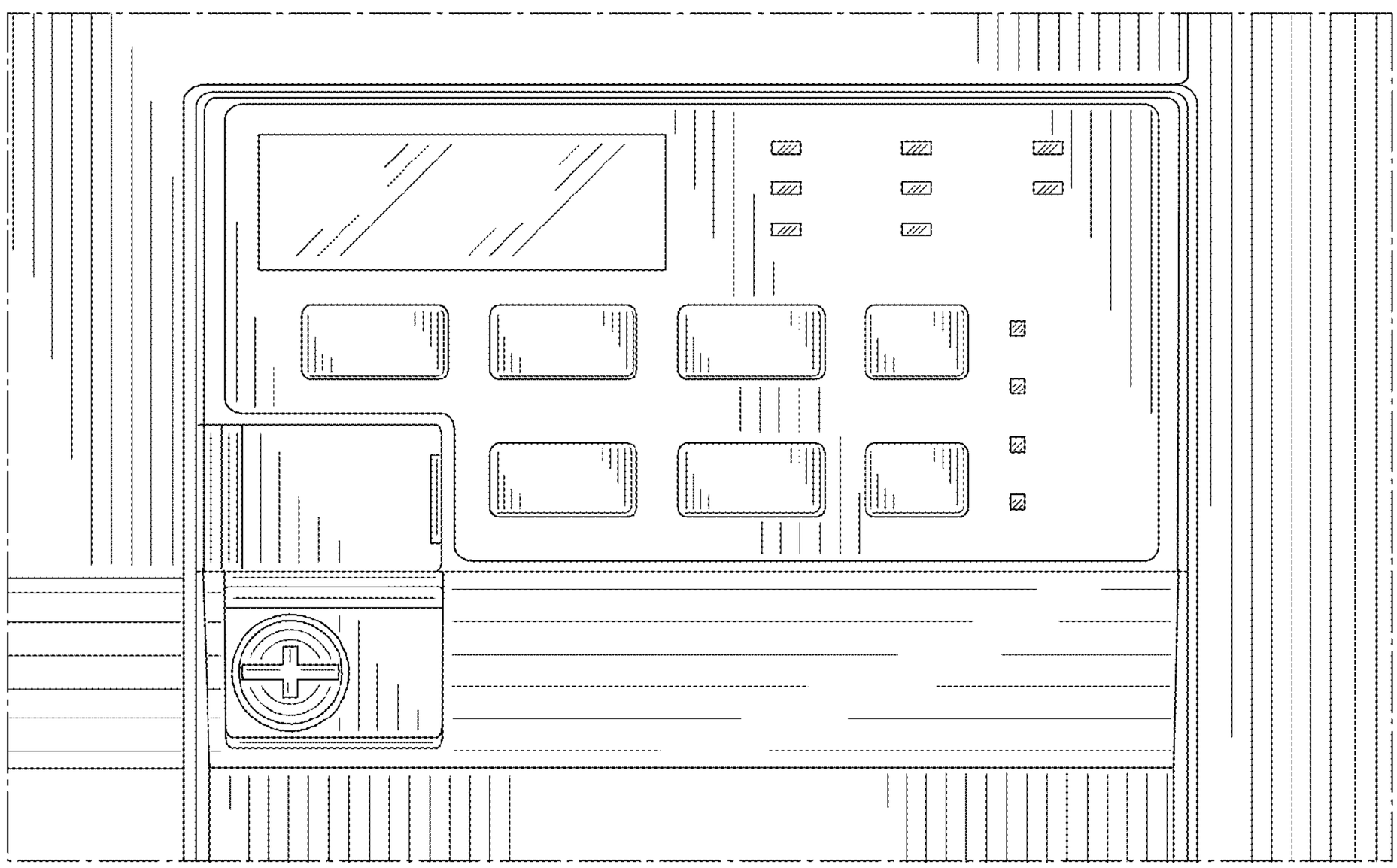
FIG. 9