US00D919742S

(12) United States Design Patent

Chapin et al.

(10) Patent No.: US D919,742 S
(45) Date of Patent: ** May 18, 2021

(54) **ANT BAIT STATION**

(71) Applicant: **Sterling International Inc.**, Spokane, WA (US)

(72) Inventors: **Marc Chapin**, Spokane, WA (US); **Qing-He Zhang**, Greenacres, WA (US); **Rodney G. Schneidmiller**, Greenacres, WA (US)

(73) Assignee: **Sterling International Inc.**, Spokane, WA (US)

(**) Term: **15 Years**

(21) Appl. No.: **29/680,136**

(22) Filed: **Feb. 13, 2019**

(51) **LOC (13) Cl.** **22-06**

(52) **U.S. Cl.**
USPC **D22/122**

(58) **Field of Classification Search**
USPC D22/122, 124; 43/112–114, 121, 124, 43/131, 132.1

(Continued)

(56) **References Cited**

U.S. PATENT DOCUMENTS

D323,871 S * 2/1992 Nitta D22/119
D362,045 S * 9/1995 Demarest D22/119

(Continued)

FOREIGN PATENT DOCUMENTS

JP 2003-274834 A 9/2003

OTHER PUBLICATIONS

Raid Double Control Ant Baits, 4 ct . . . https://www.walmart.com/ip/Raid-Double-Control-Ant-Baits-4-CT/231876146?athcpid=231876146&athpgid=athenaItemPage&athcgid=null&athznid=PWVAV&athieid=v0&athstid=CS055&athguid=aea5c510-007-1785b5bd6e605a&athancid=null&athena=true (Year: 2020).*

Primary Examiner — Catherine R Oliver-Garcia
(74) *Attorney, Agent, or Firm* — Christensen O'Connor Johnson Kindness, PLLC

(57) **CLAIM**

The ornamental design for the ant bait station, as shown.

DESCRIPTION

FIG. **1** is a top, front and left side perspective view of an ant bait station in accordance with the present design;
FIG. **2** is a top plan view thereof;
FIG. **3** is a left side view thereof, which due to symmetry is the same as the right side, the front elevation, and the rear elevation views;
FIG. **4** is a bottom plan view thereof;
FIG. **5** is a bottom, rear and right side perspective view thereof;
FIG. **6** is a cross sectional view of FIG. **1**, shown along lines **6-6** indicated in FIG. **2**;
FIG. **7** is a top, front and left side perspective view of an ant bait station in accordance with a second embodiment of the present design;
FIG. **8** is a top plan view thereof;
FIG. **9** is a left side view thereof, which due to symmetry is the same as the right side, the front elevation, and the rear elevation views;
FIG. **10** is a bottom plan view thereof;
FIG. **11** is a bottom, rear and right side perspective view of the ant bait station shown in FIG. **7**;
FIG. **12** is a cross sectional view of FIG. **7**, shown along lines **12-12** indicated in FIG. **8**;
FIG. **13** is a top, front and left side perspective view of an ant bait station in accordance with a third embodiment of the present design;
FIG. **14** is a top plan view thereof;
FIG. **15** is a left side view thereof, which due to symmetry is the same as the right side, the front elevation, and the rear elevation views;
FIG. **16** is a bottom plan view as shown in FIG. **13**;
FIG. **17** is a bottom, rear and right side view thereof; and,

(Continued)

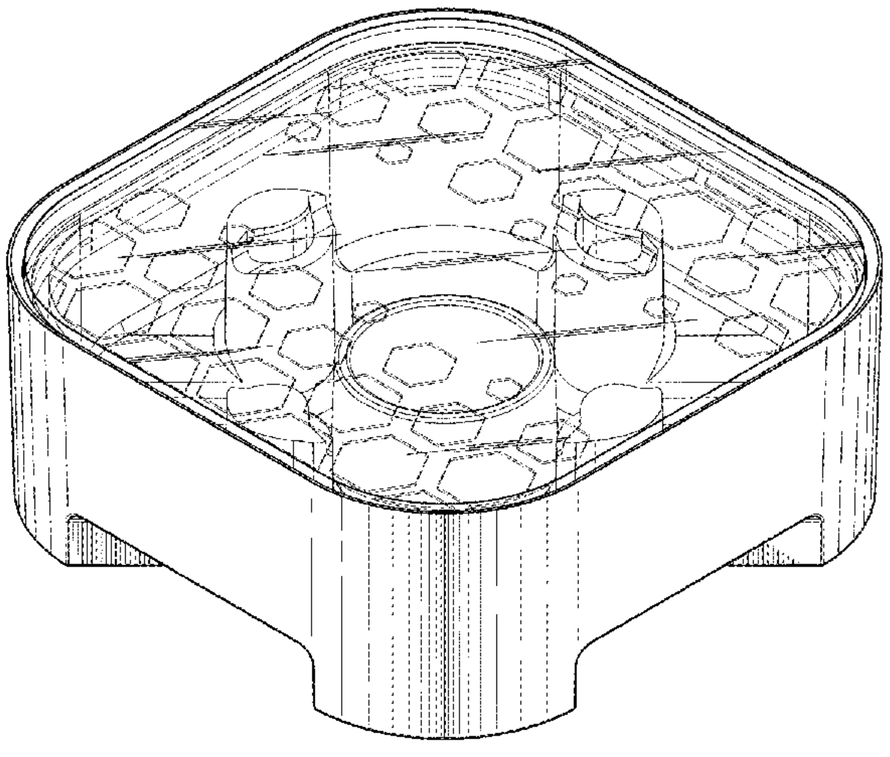

FIG. **18** is a cross sectional view, shown along lines **18-18** indicated in FIG. **14**.

1 Claim, 15 Drawing Sheets

(58) **Field of Classification Search**
CPC A01M 1/14; A01M 1/103; A01M 1/2005
See application file for complete search history.

(56) **References Cited**

U.S. PATENT DOCUMENTS

D362,897	S	*	10/1995	Cohen	D22/122
D422,670	S	*	4/2000	Kemmis	D22/122
6,189,259	B1		2/2001	Soller	
6,651,378	B2	*	11/2003	Baker	A01M 1/2005 43/121
D686,689	S	*	7/2013	Bernard	D22/122
D722,128	S	*	2/2015	Wang	D22/122
D725,224	S		3/2015	Zhang et al.	
D729,340	S		5/2015	Zhang et al.	
D734,420	S		7/2015	Zhang et al.	
D734,829	S		7/2015	Zhang et al.	
D777,292	S	*	1/2017	Schumacher	D22/122
D777,293	S	*	1/2017	Schumacher	D22/122
D811,517	S		2/2018	Chapin et al.	
D823,426	S		7/2018	Chapin et al.	
D855,743	S	*	8/2019	Falco, Jr.	D22/122
D877,851	S	*	3/2020	Falco, Jr.	D22/122
2001/0054249	A1		12/2001	Baker	
2017/0245488	A1		8/2017	Zhang et al.	

* cited by examiner

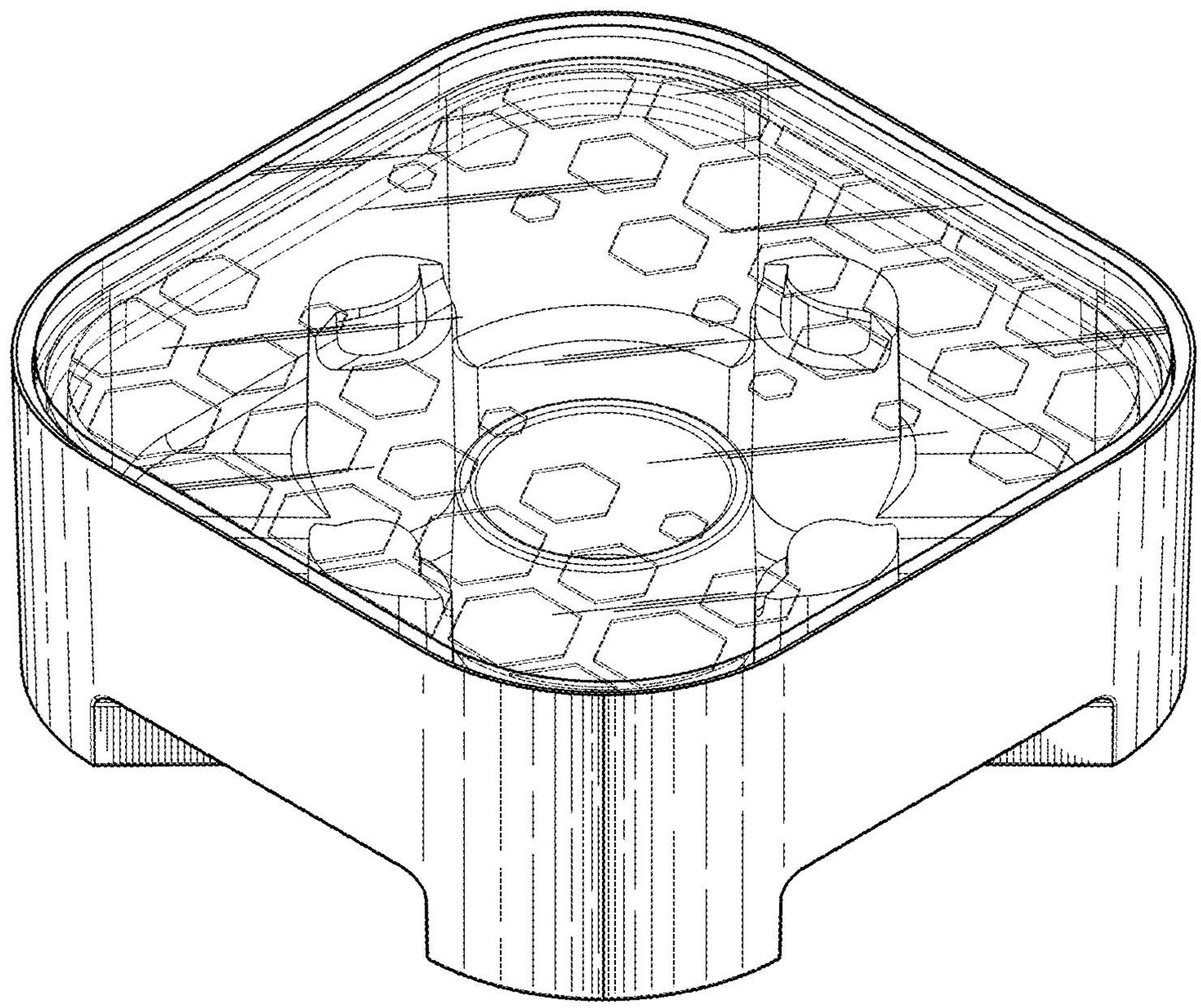

Fig. 1.

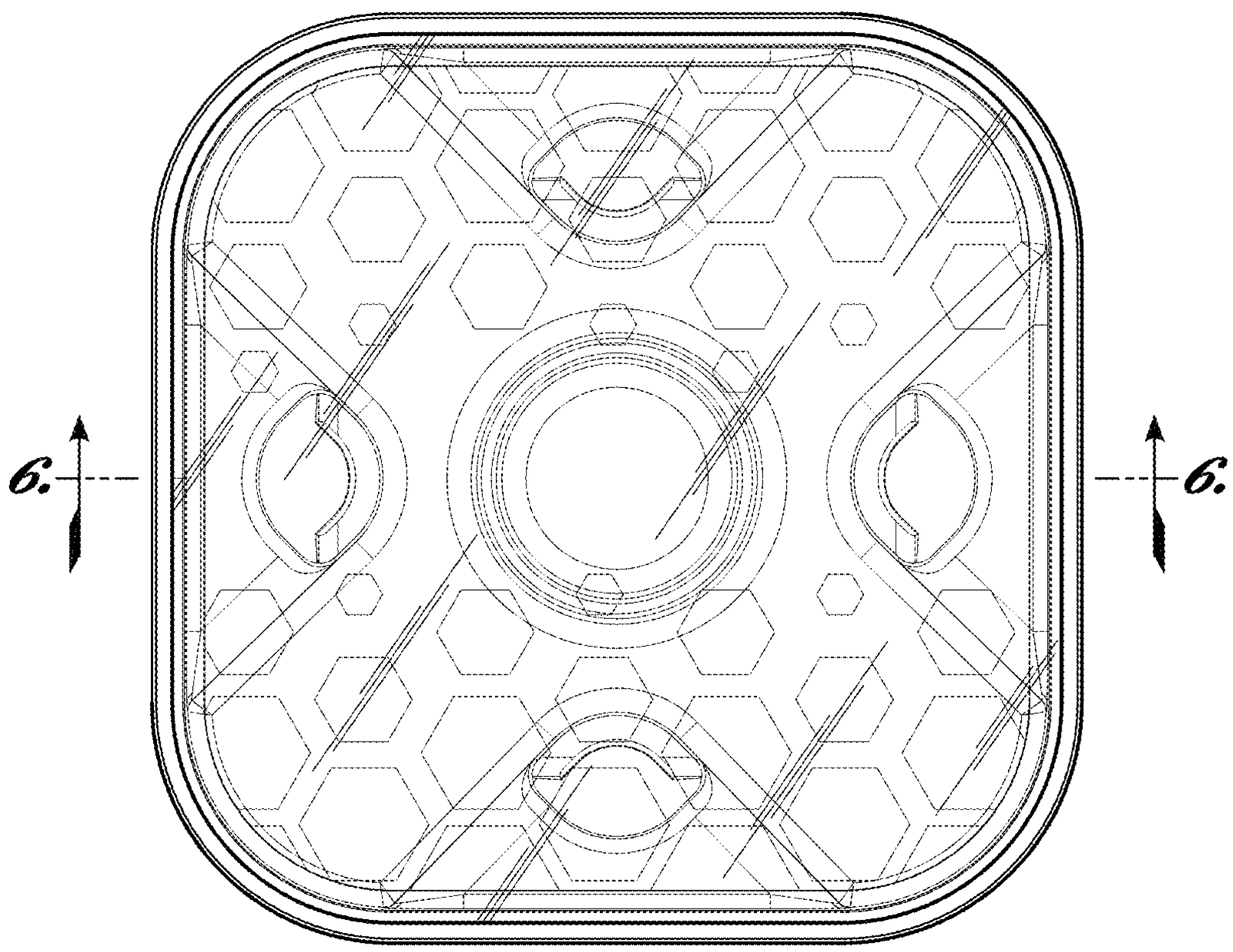

Fig. 2.

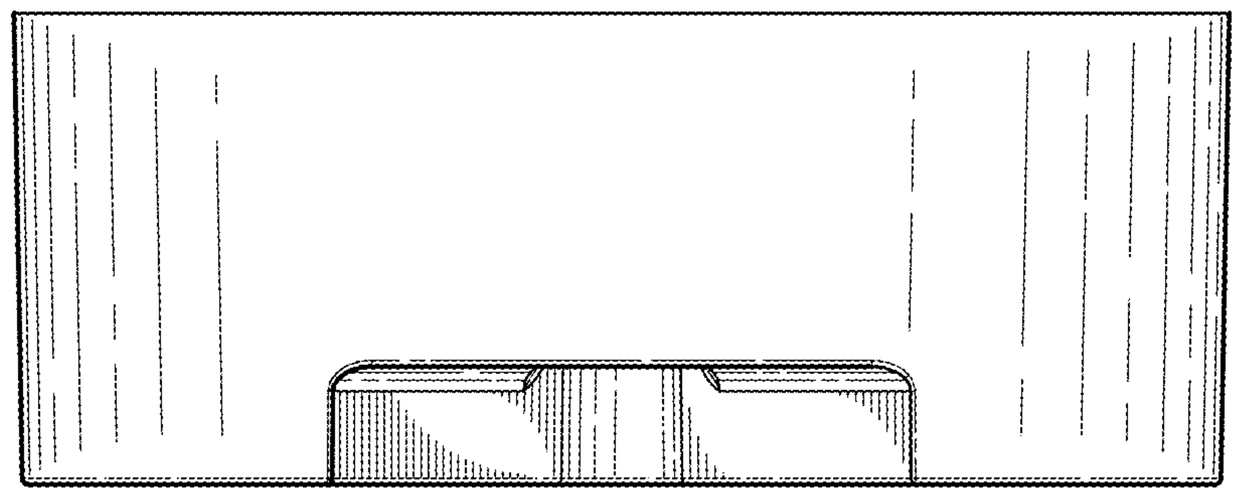

Fig. 3.

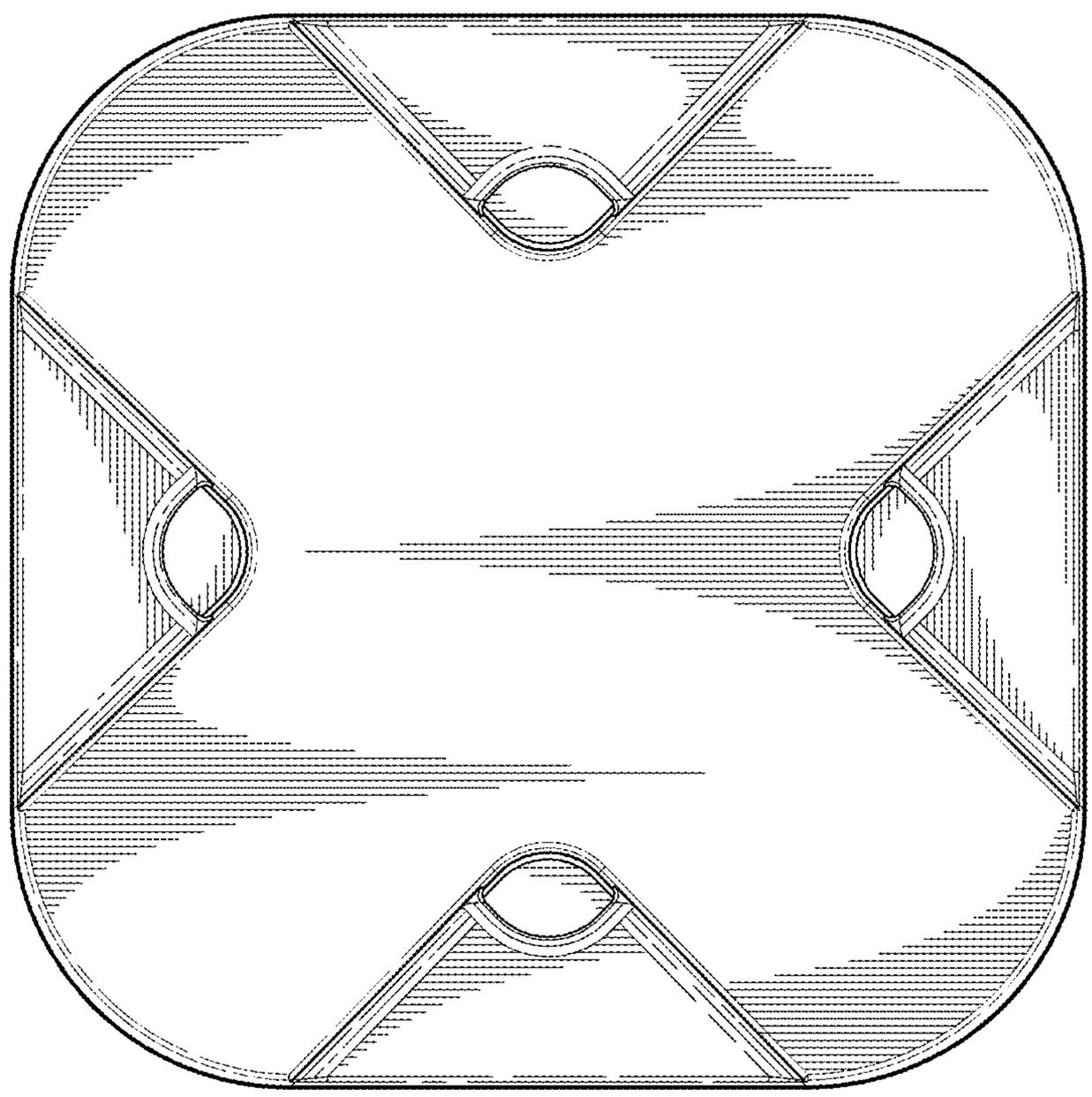

Fig. 4.

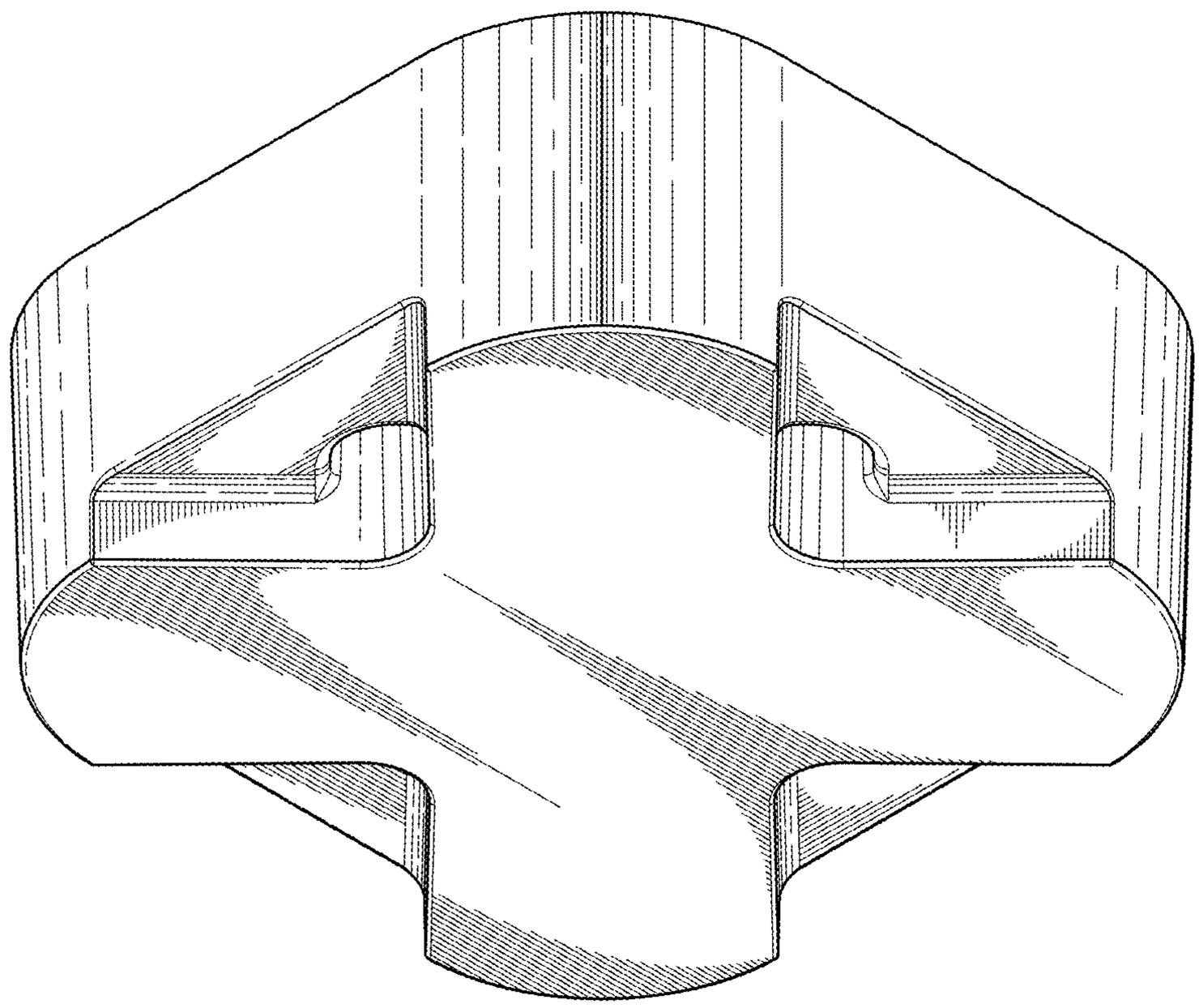

Fig. 5.

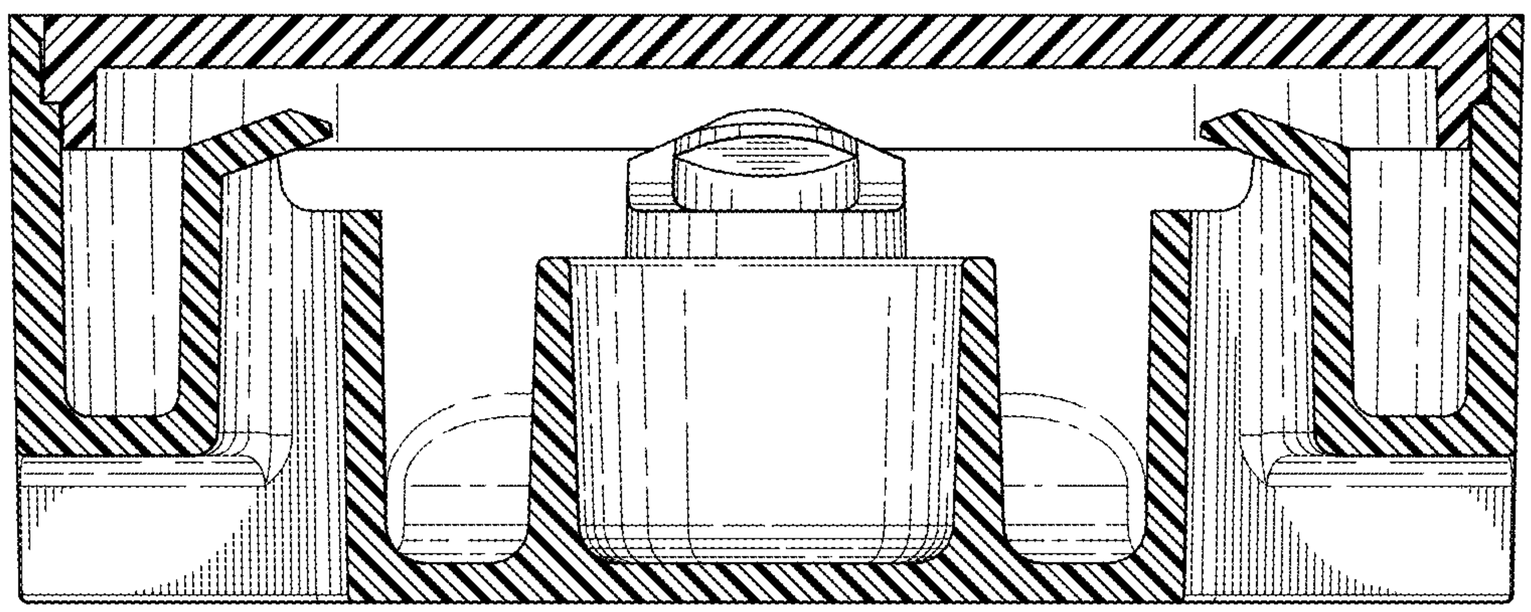

Fig. 6.

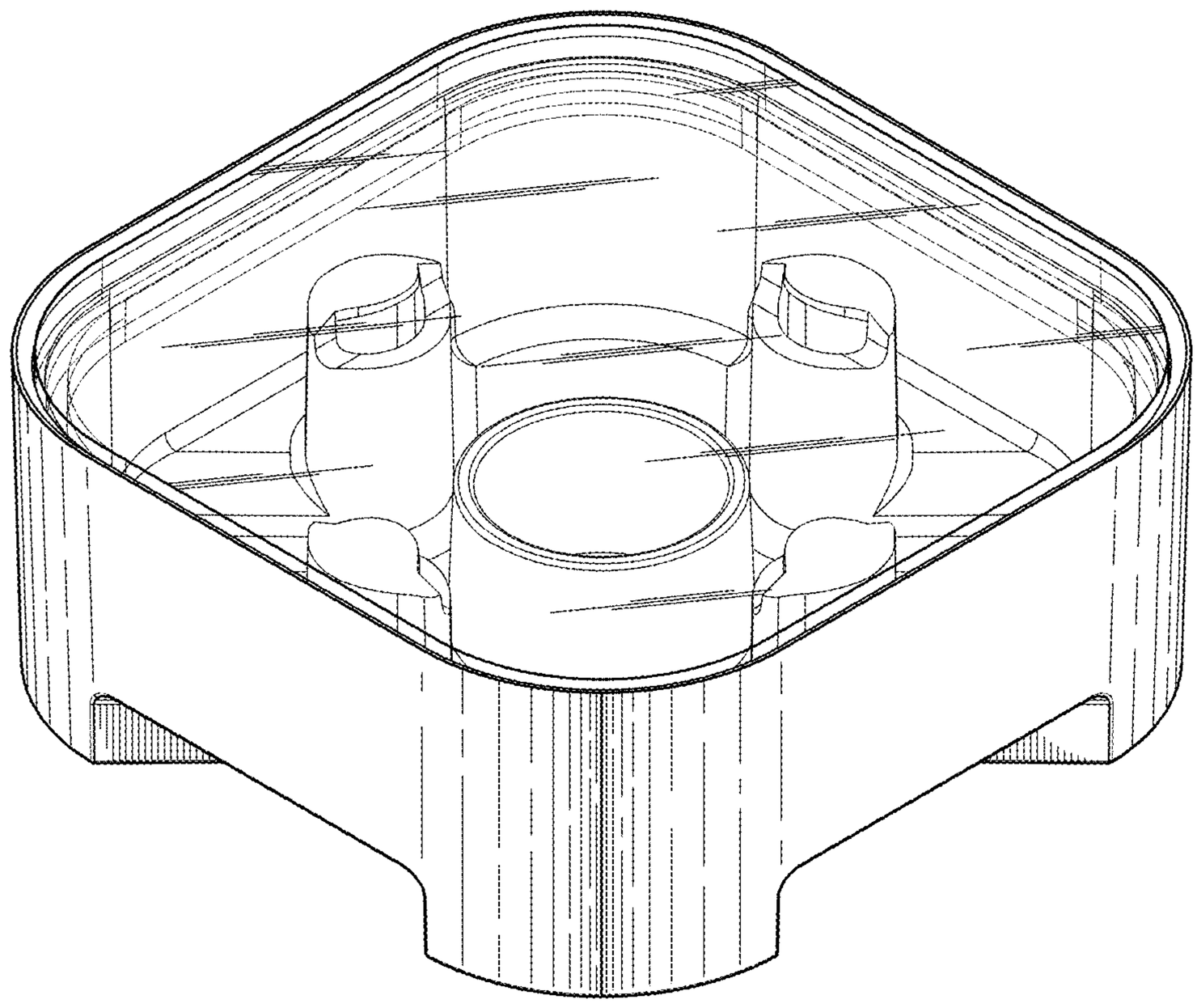

Fig. 7.

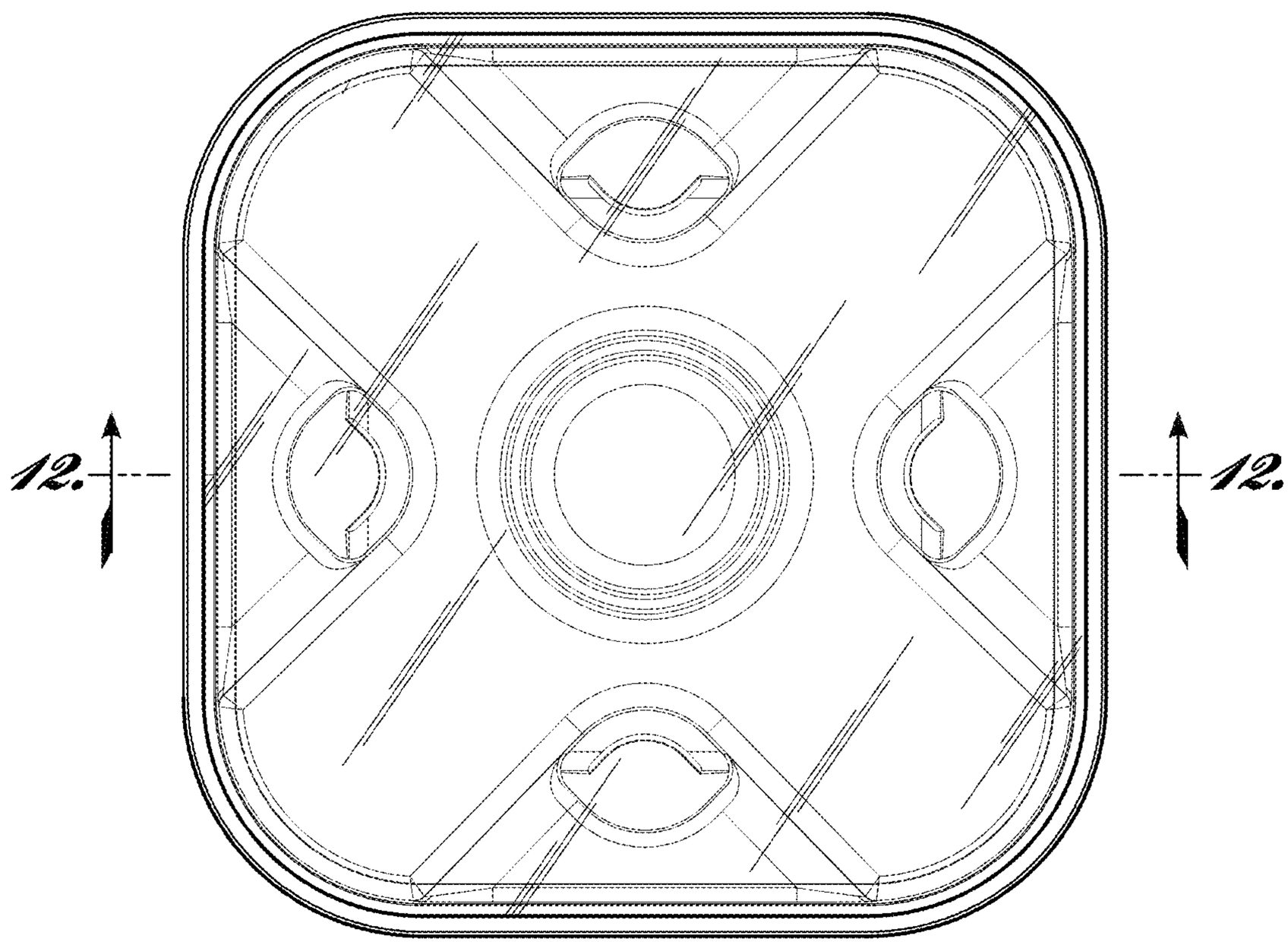

Fig. 8.

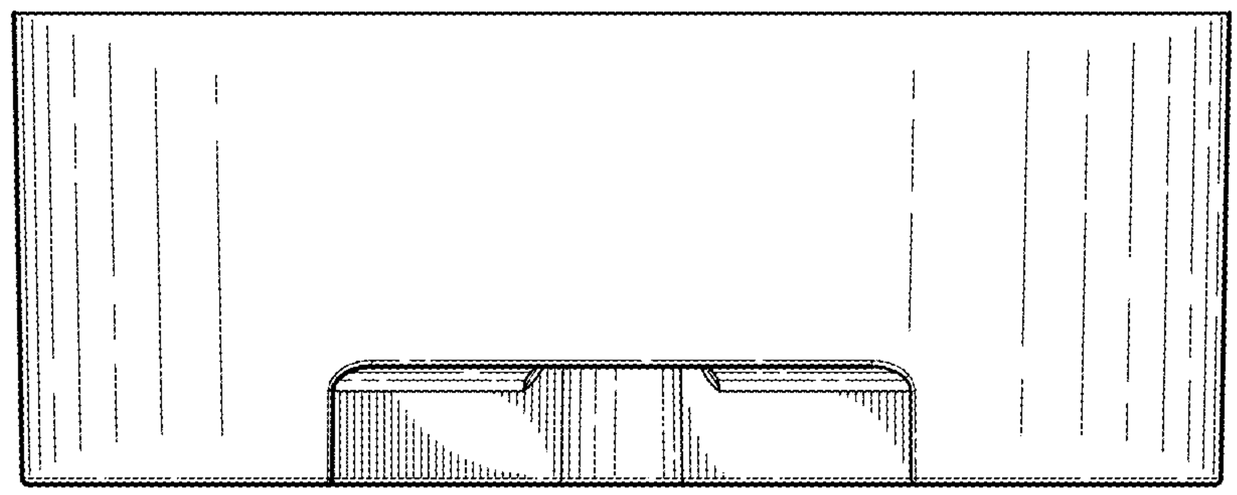

Fig. 9.

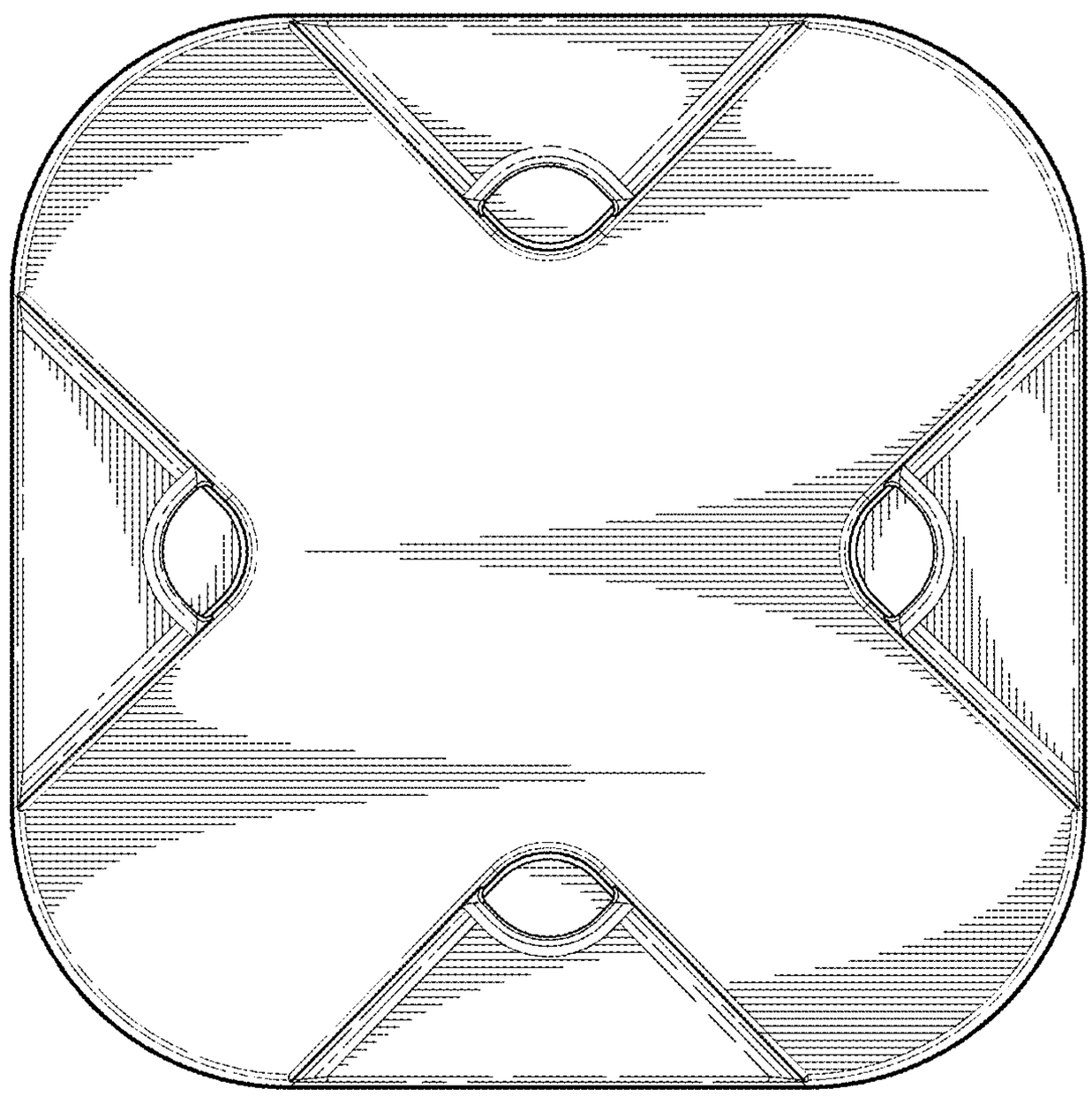

Fig. 10.

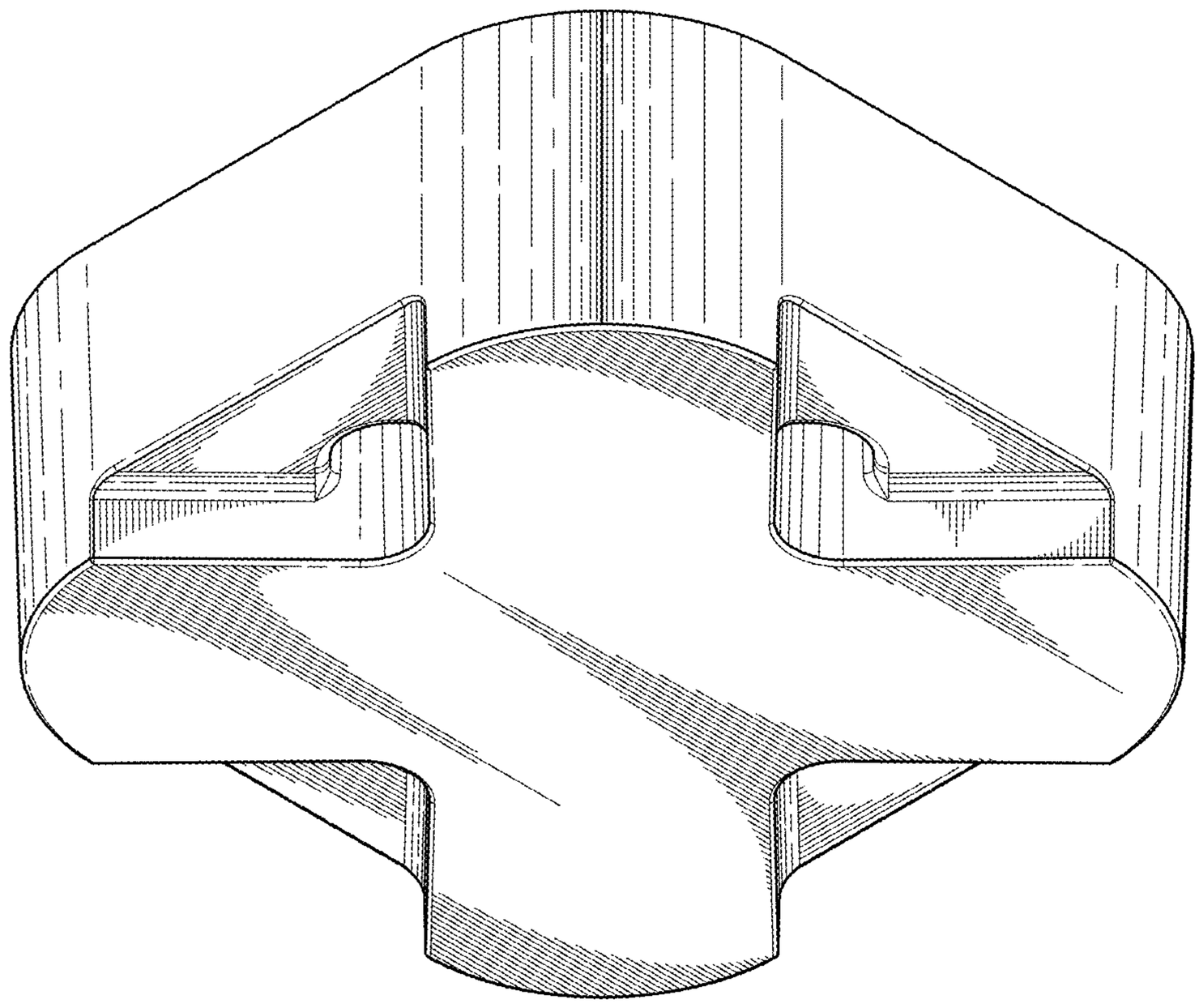

Fig. 11.

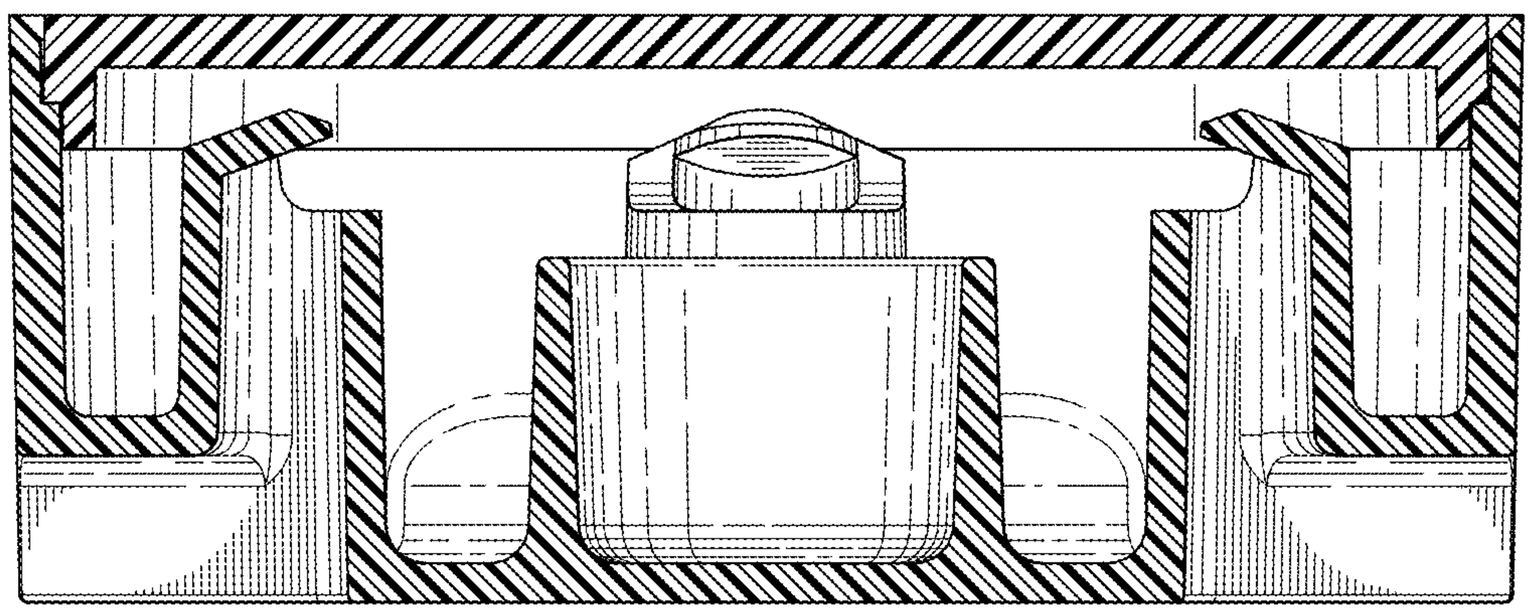

Fig. 12.

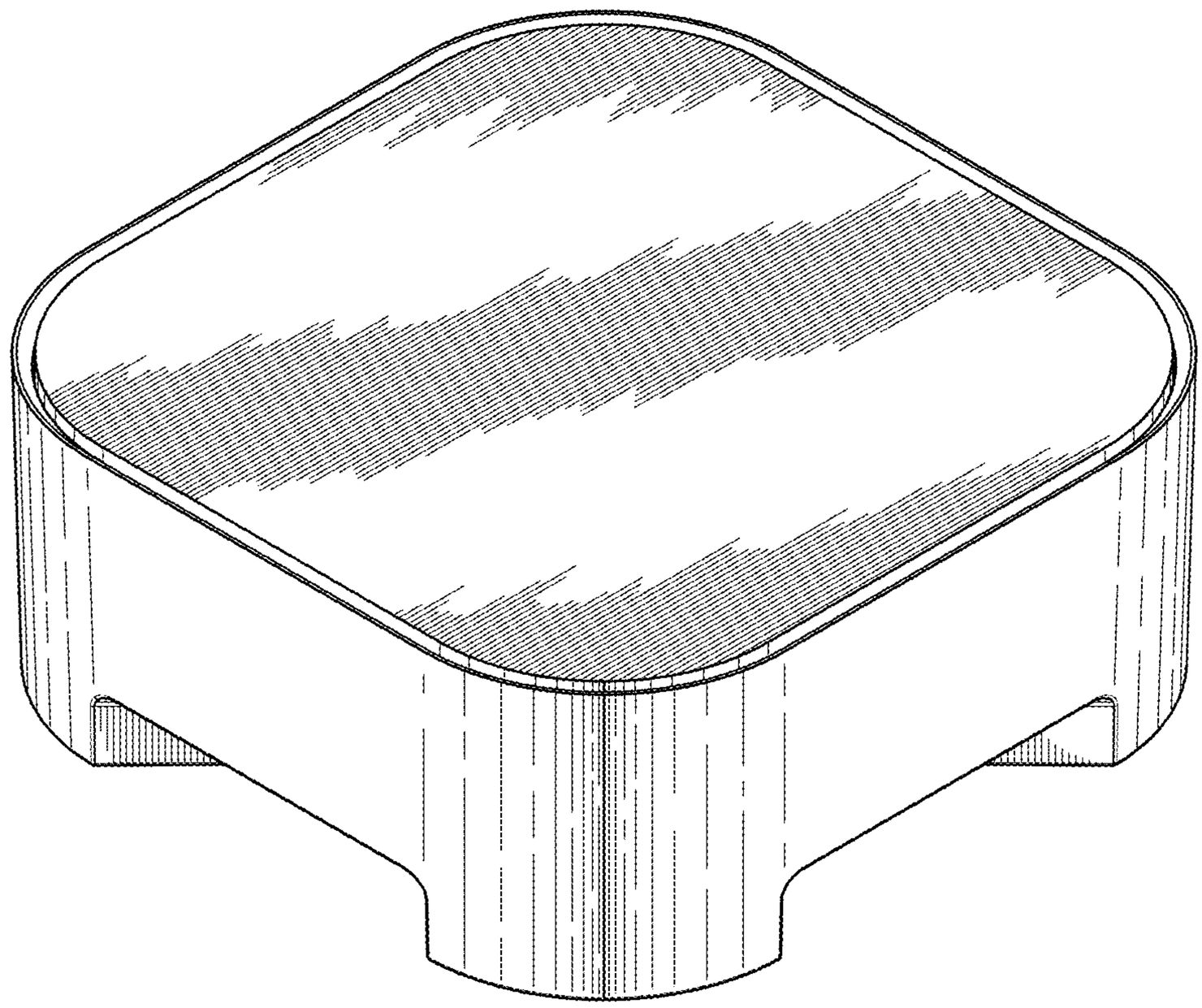

Fig. 13.

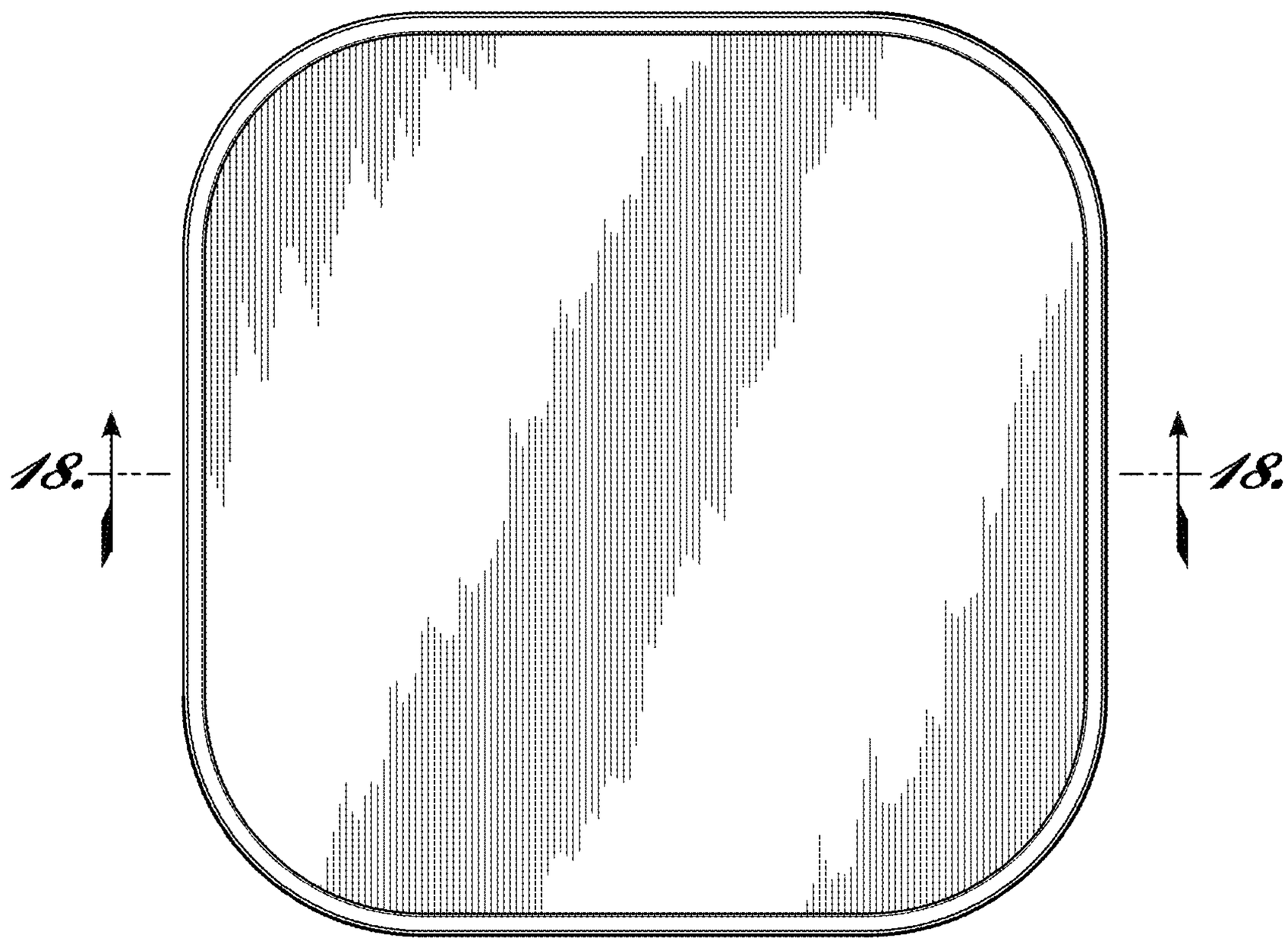

Fig. 14.

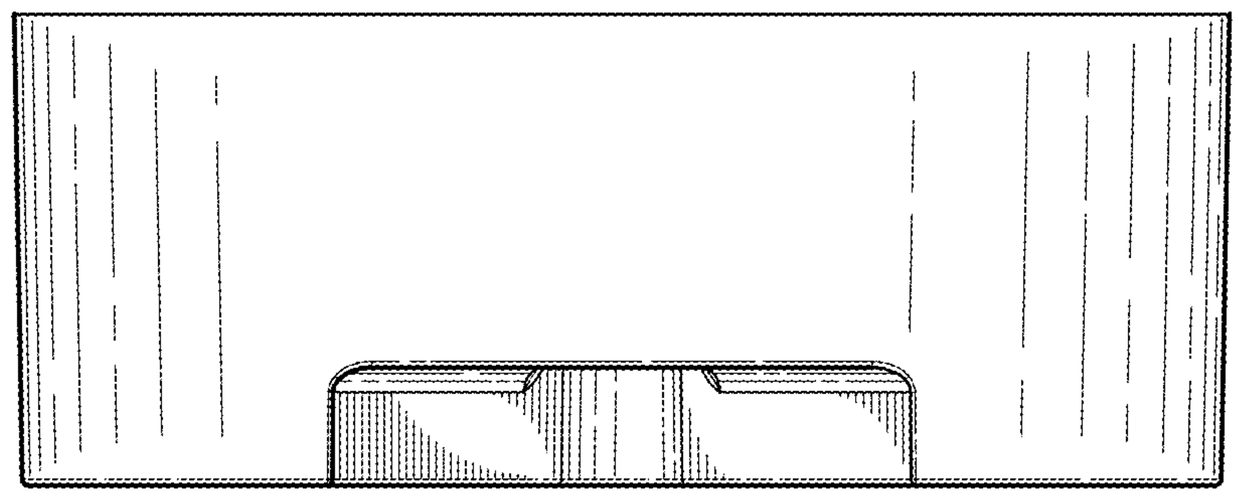

Fig. 15.

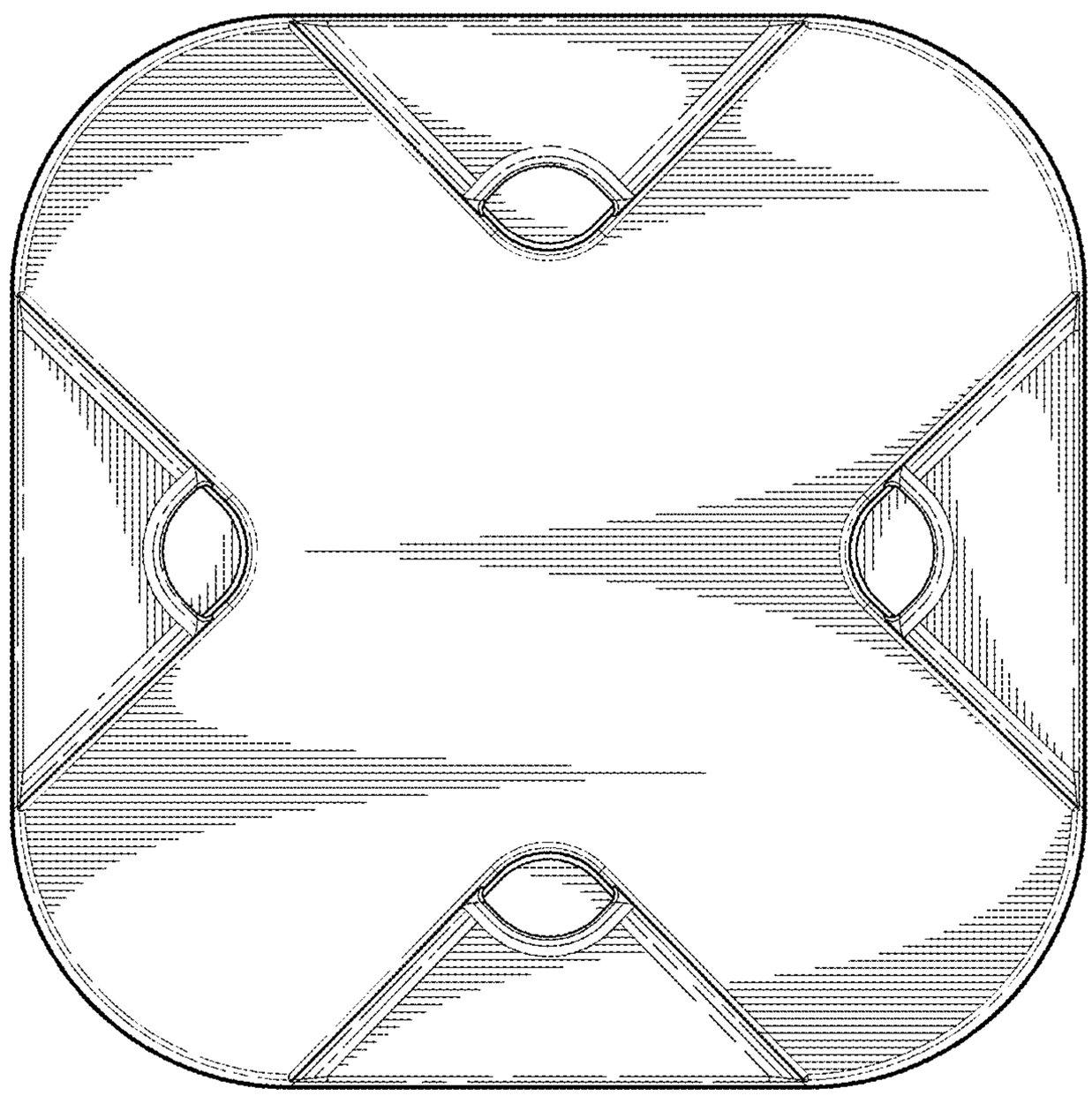

Fig. 16.

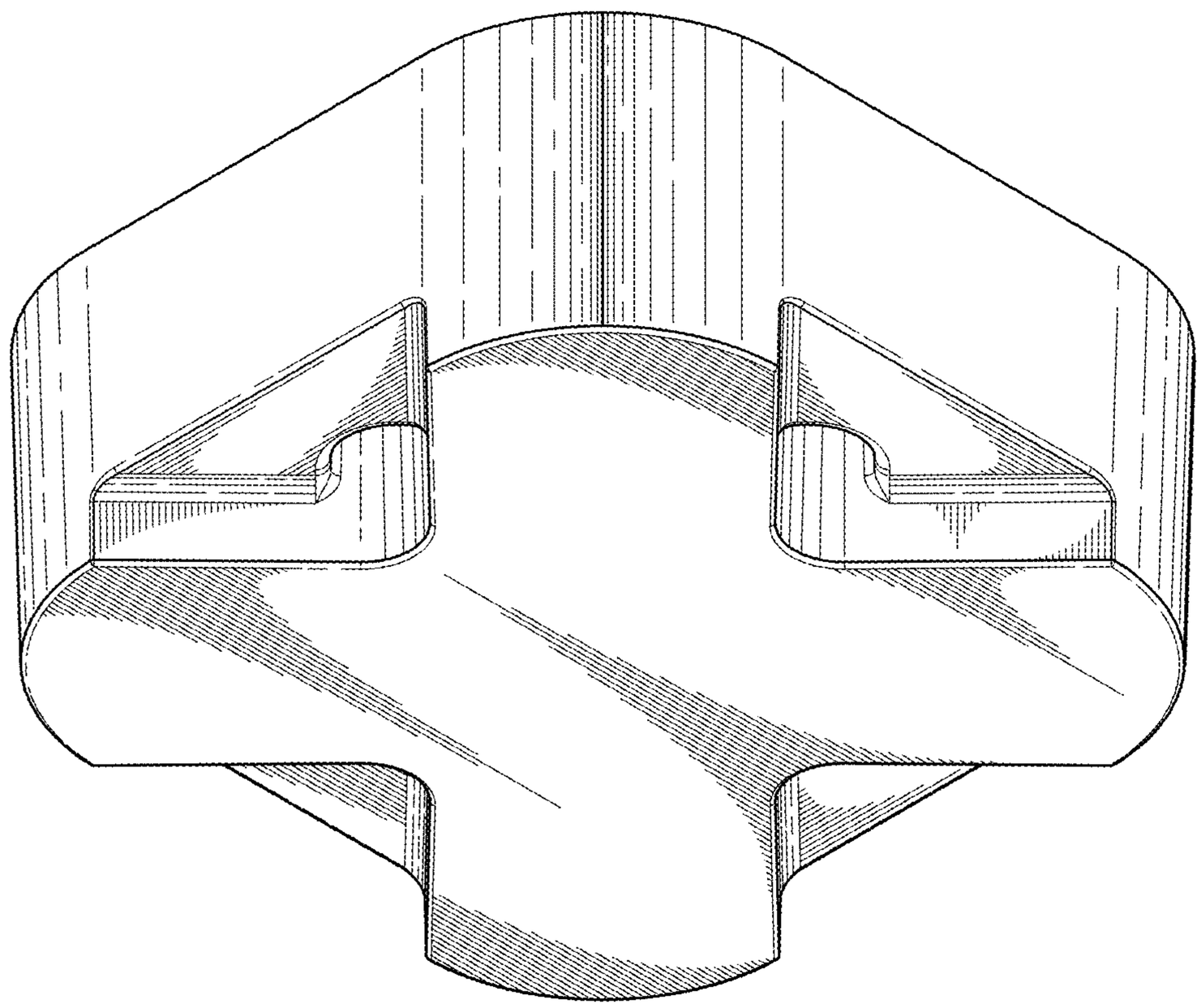

Fig. 17.

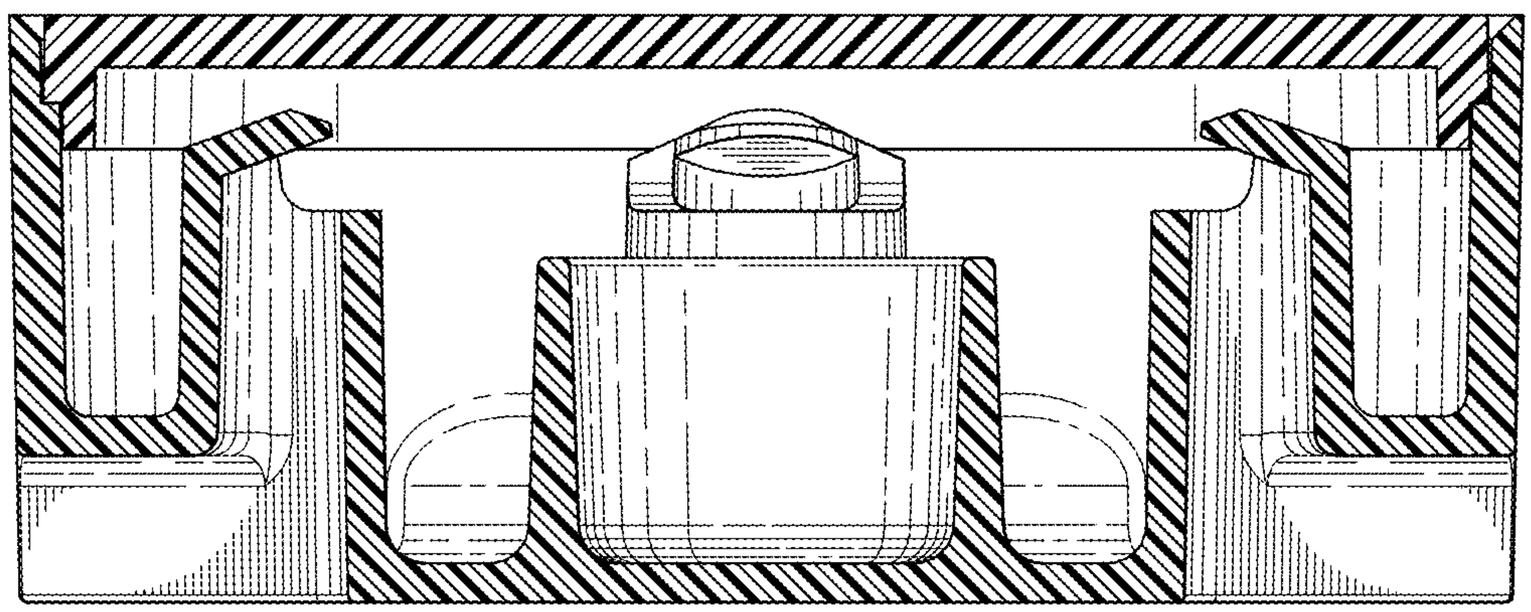

Fig. 18.