US00D919685S

(12) United States Design Patent
Fan

(10) Patent No.: US D919,685 S
(45) Date of Patent: ** May 18, 2021

(54) **ROBOT**

(71) Applicant: **Vincross China Inc.**, Beijing (CN)

(72) Inventor: **Hong Fan**, Beijing (CN)

(73) Assignee: **Vincross China Inc.**, Beijing (CN)

(**) Term: **15 Years**

(21) Appl. No.: **29/703,929**

(22) Filed: **Aug. 30, 2019**

(30) **Foreign Application Priority Data**

Apr. 11, 2019 (CN) 201930162511.7

(51) **LOC (13) Cl.** **15-99**

(52) **U.S. Cl.**
USPC **D15/199**

(58) **Field of Classification Search**
USPC D15/199; D21/578–583, 621, 622; D32/21; D34/34
CPC B23K 9/133; B23K 9/287; B25J 9/0018; B25J 19/0025; Y10T 74/20; Y10T 74/20207; Y10T 74/20311; Y10T 74/20305; Y10S 901/01
See application file for complete search history.

(56) **References Cited**

U.S. PATENT DOCUMENTS

D314,401 S * 2/1991 Lehman D20/3
5,127,486 A * 7/1992 Yardley B62D 1/28 180/168
5,187,664 A * 2/1993 Yardley G05D 1/0265 180/167
5,324,948 A * 6/1994 Dudar G01S 15/931 250/253
D625,059 S * 10/2010 Morenstein D32/21
8,898,844 B1 * 12/2014 Dooley A47L 11/408 15/98
D722,631 S * 2/2015 Stone D15/199
D743,647 S * 11/2015 Heck D32/21
D810,799 S * 2/2018 Sokuza D15/199
D812,663 S * 3/2018 Waters D15/199
D839,331 S * 1/2019 Nilsson D15/199
D849,813 S * 5/2019 Sutherland D15/199
10,399,616 B2 * 9/2019 Ellerman A63H 33/26
D864,270 S * 10/2019 Hu D15/199
D865,021 S * 10/2019 Hu D15/199
D871,475 S * 12/2019 Kolb D15/199
D871,477 S * 12/2019 Kolb D15/199
D873,173 S * 1/2020 Brucker D12/1
D873,174 S * 1/2020 Sokuza D12/1
D879,852 S * 3/2020 Chen D15/199
D880,550 S * 4/2020 Sokuza D15/199
D886,173 S * 6/2020 Sokuza D15/199
D887,468 S * 6/2020 Hirvesaar D15/199
2012/0026481 A1 * 2/2012 Chen G05D 1/0242 356/4.01

(Continued)

Primary Examiner — Patricia A Palasik
(74) *Attorney, Agent, or Firm* — Bay State IP, LLC

(57) **CLAIM**

The ornamental design for a robot, as shown and described.

DESCRIPTION

FIG. **1** is a perspective view of the robot showing my new design;
FIG. **2** is a front view thereof;
FIG. **3** is a back view thereof;
FIG. **4** is a top view thereof;
FIG. **5** is a bottom view thereof;
FIG. **6** is a left side view with the arms closed thereof; and,
FIG. **7** is a right side view with the arms closed thereof.
The broken lines in the drawings depict portions of the robot which form no part of the claimed design.

1 Claim, 7 Drawing Sheets

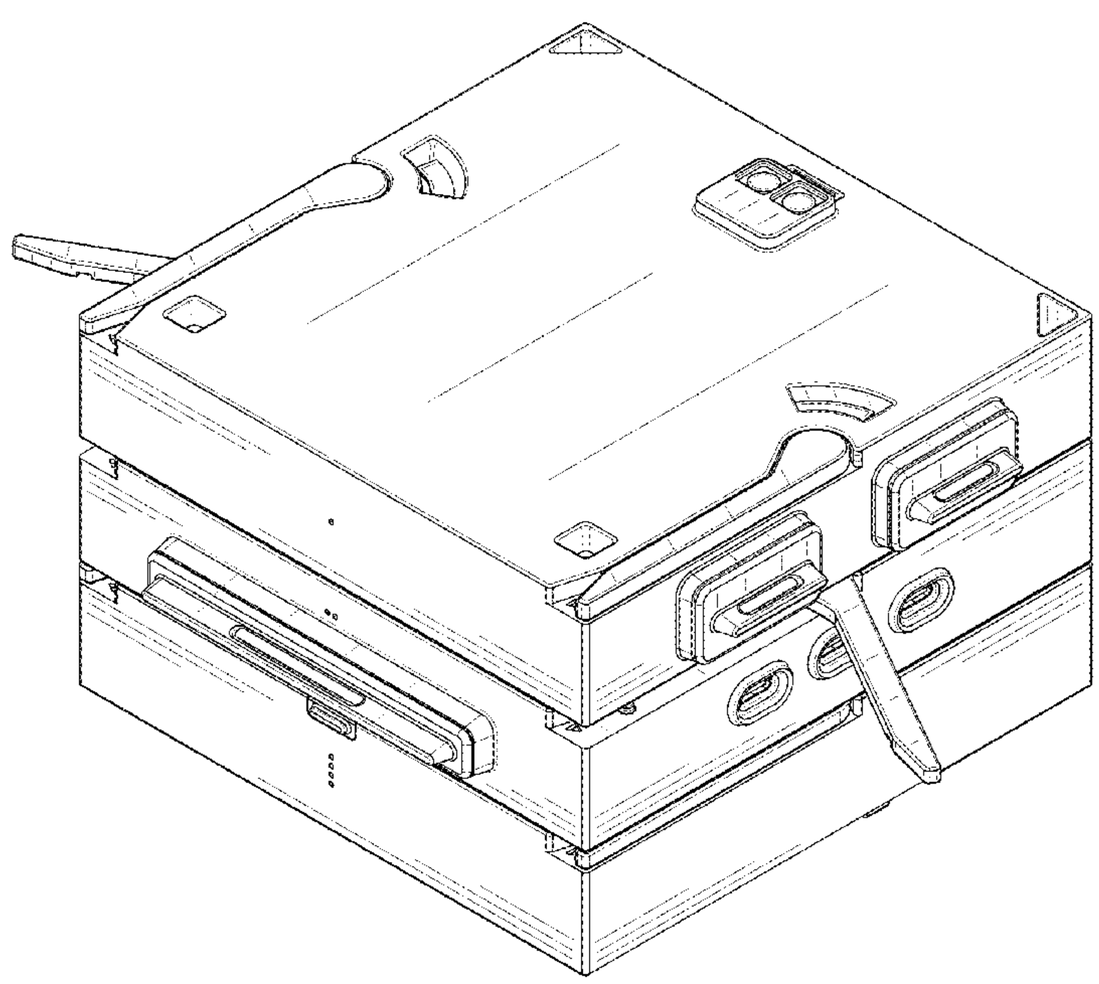

(56) **References Cited**

U.S. PATENT DOCUMENTS

2015/0224640	A1*	8/2015	Vu	B25J 5/007 700/259
2016/0327383	A1*	11/2016	Becker	G01B 11/005
2018/0099810	A1*	4/2018	Wu	B65G 1/0492
2019/0133396	A1*	5/2019	Lim	A47L 5/12
2019/0270472	A1*	9/2019	Akamatsu	B62B 5/0093

* cited by examiner

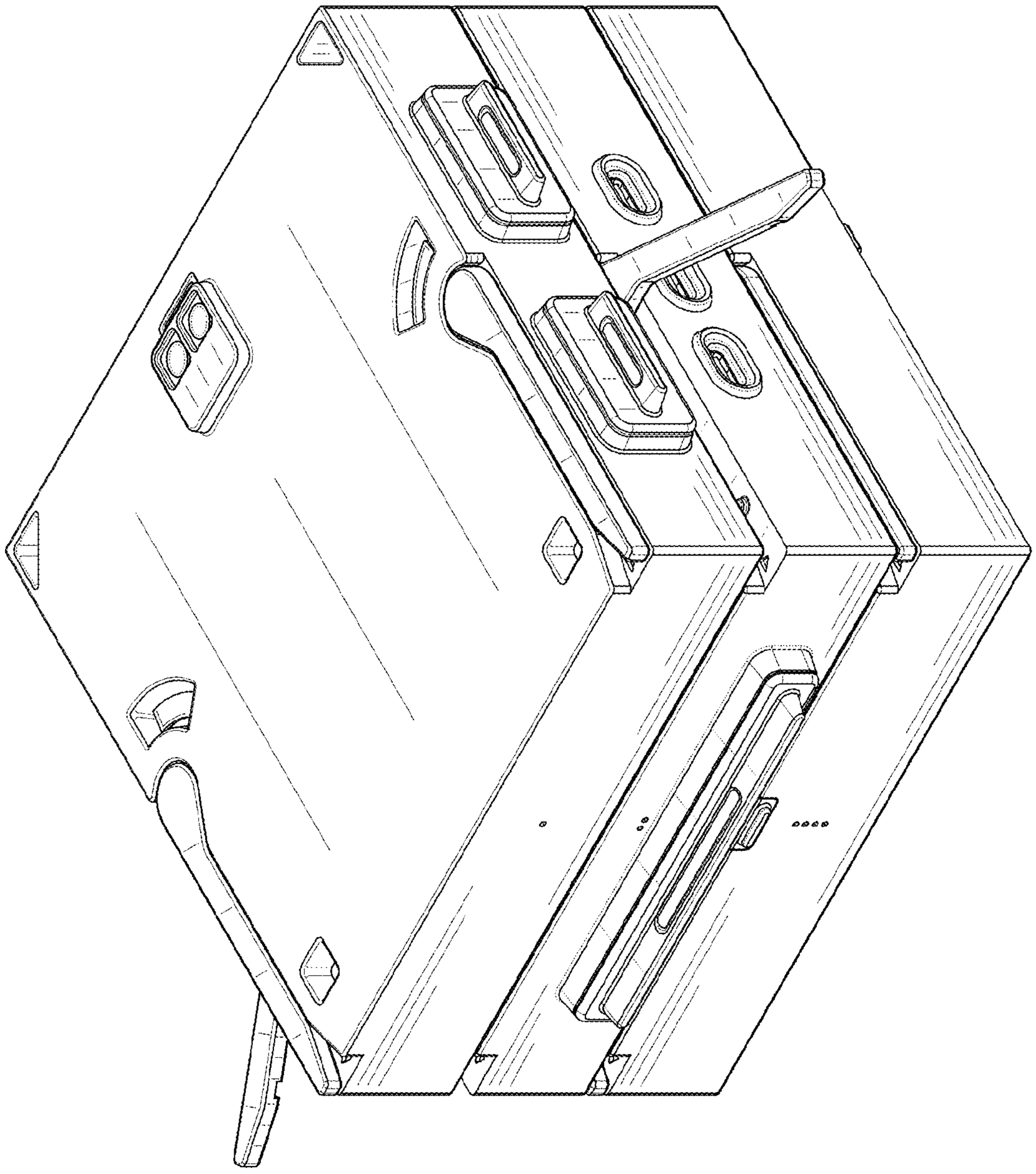

FIG. 1

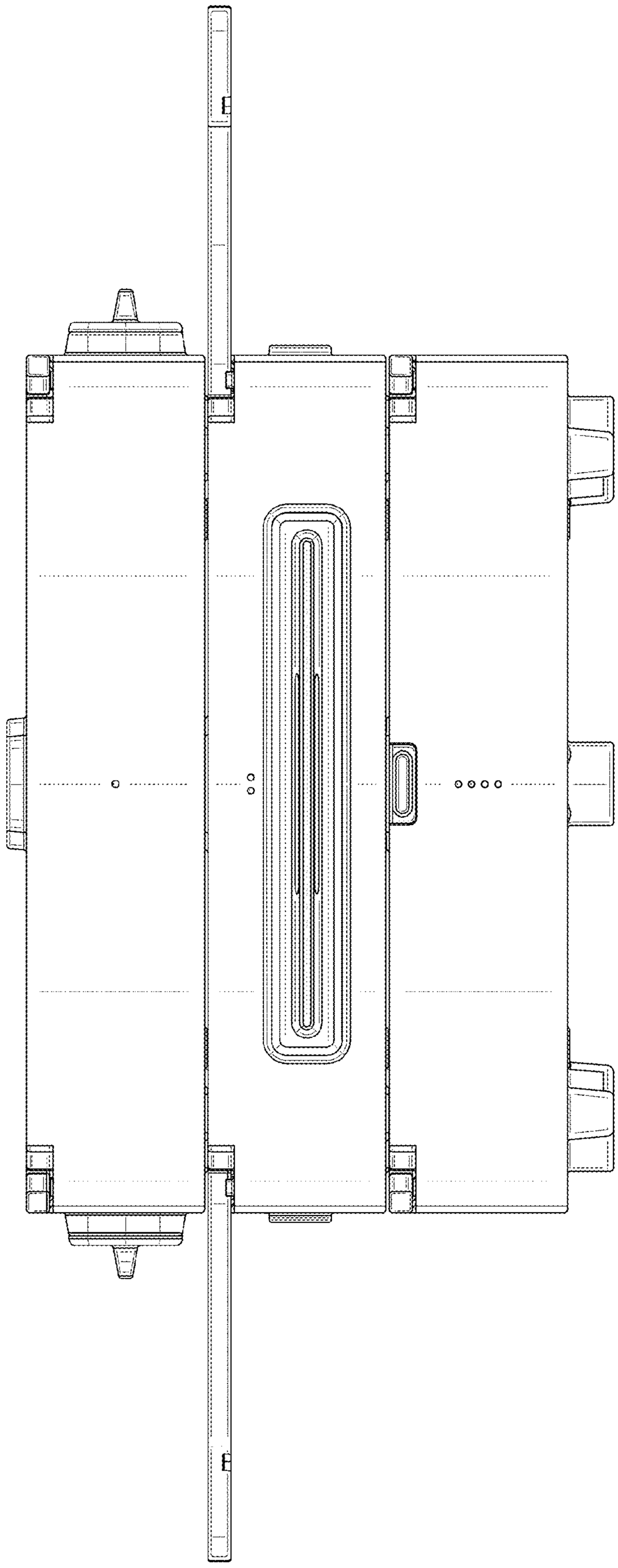

FIG. 2

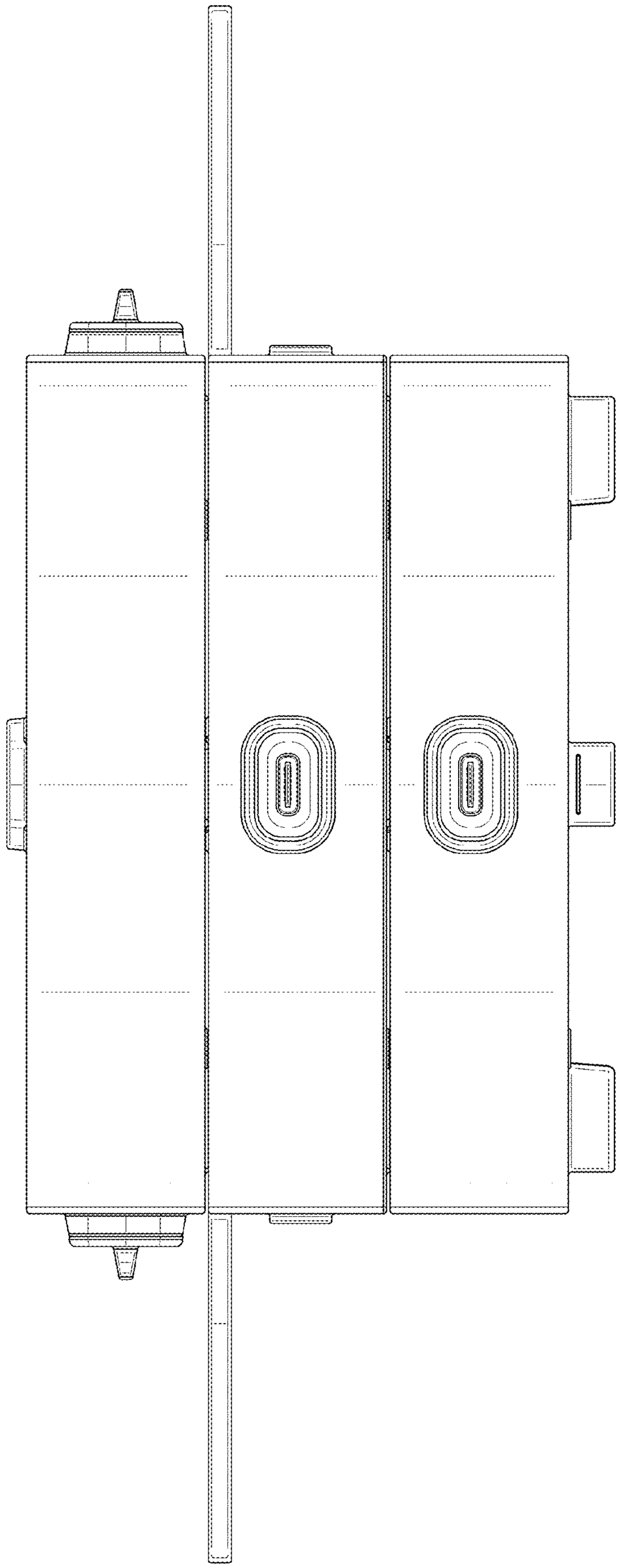

FIG. 3

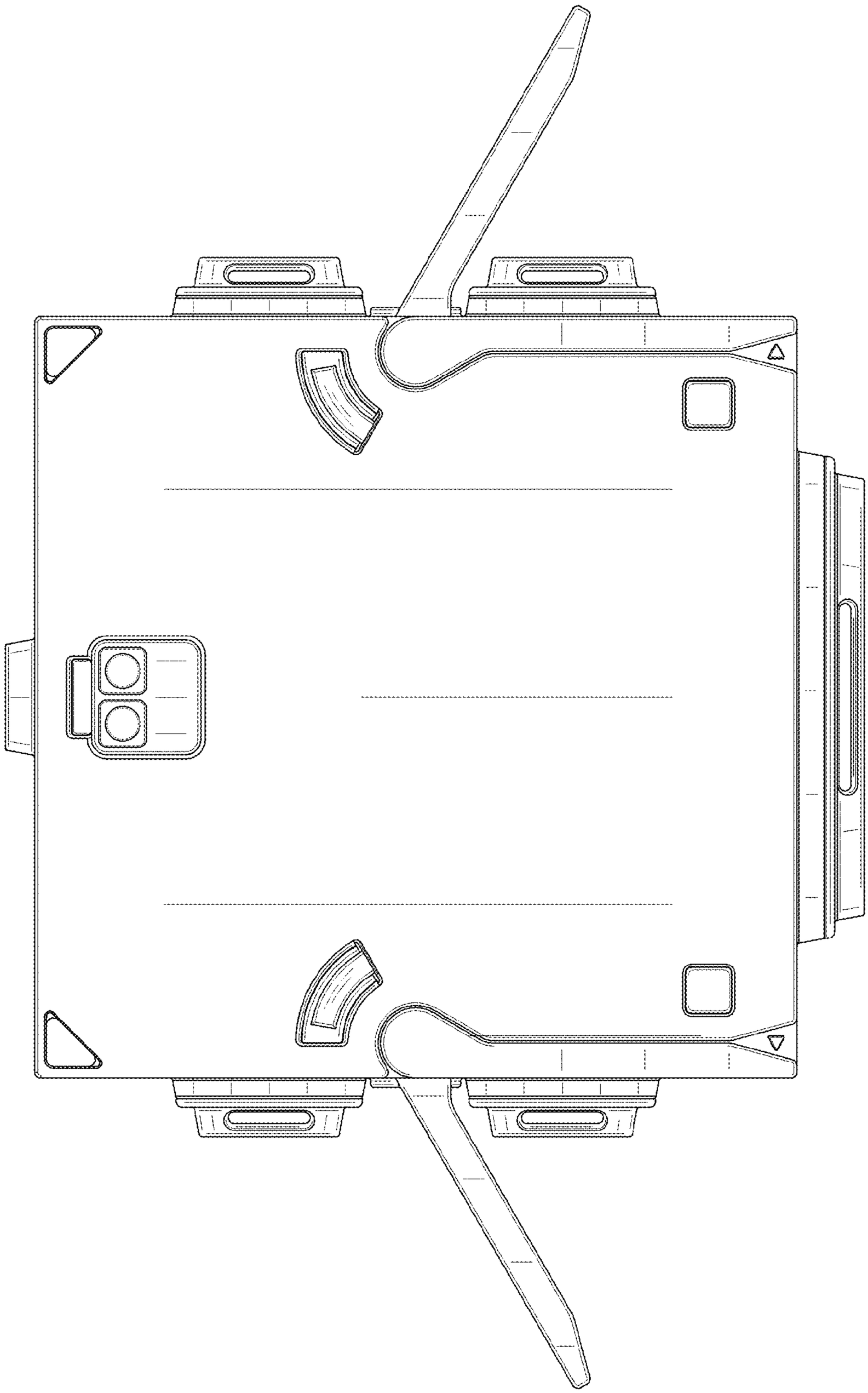

FIG. 4

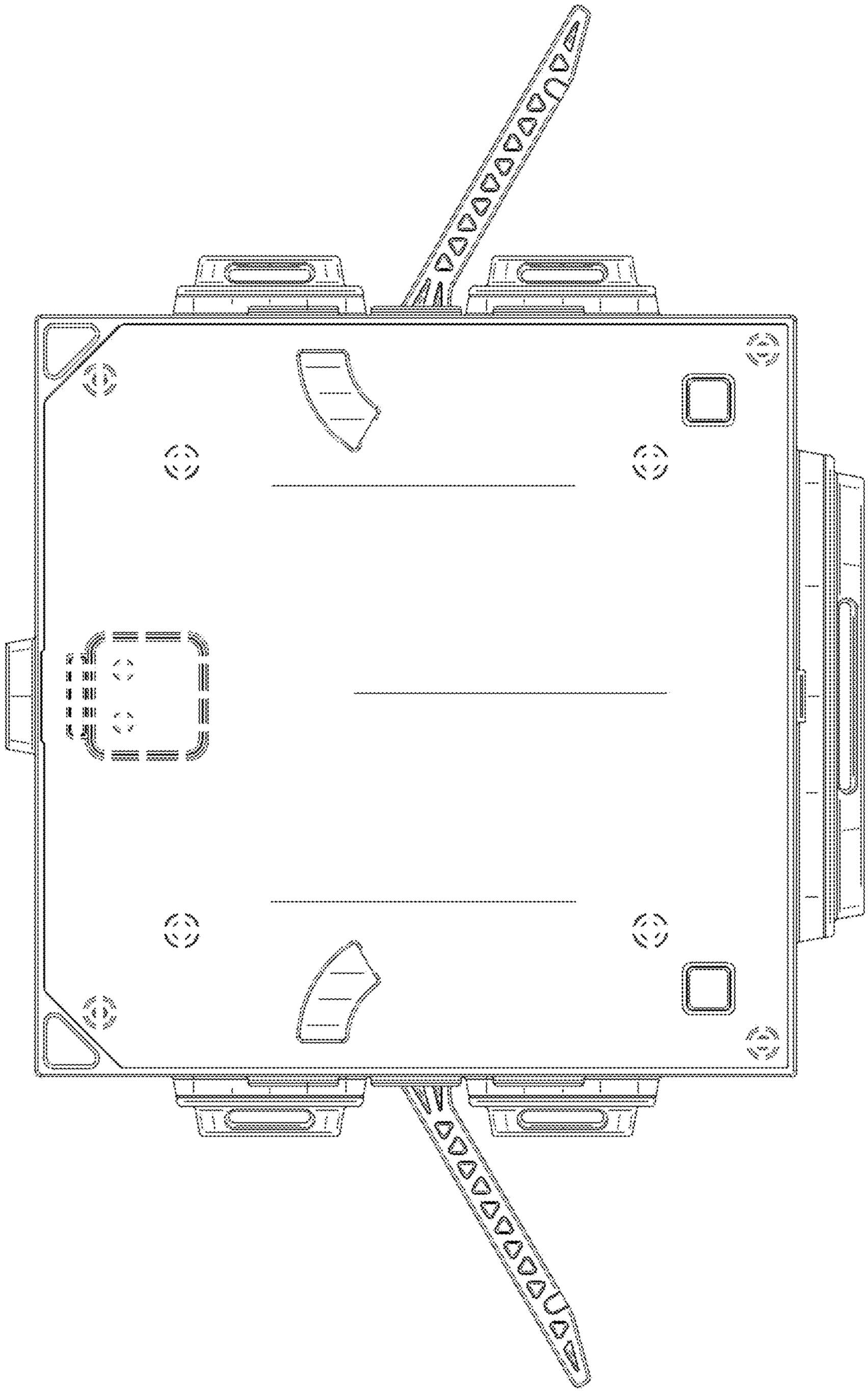

FIG. 5

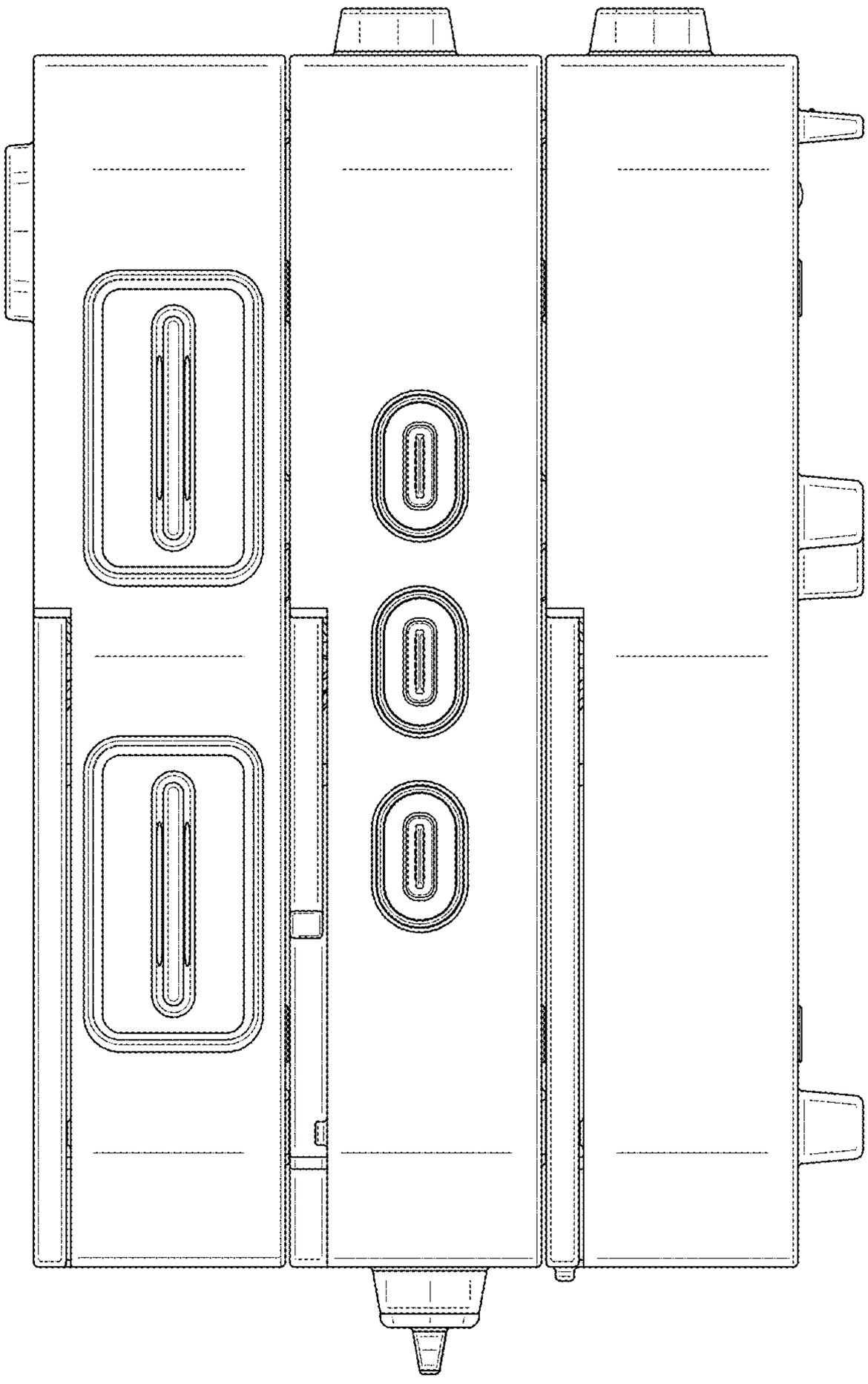

FIG. 6

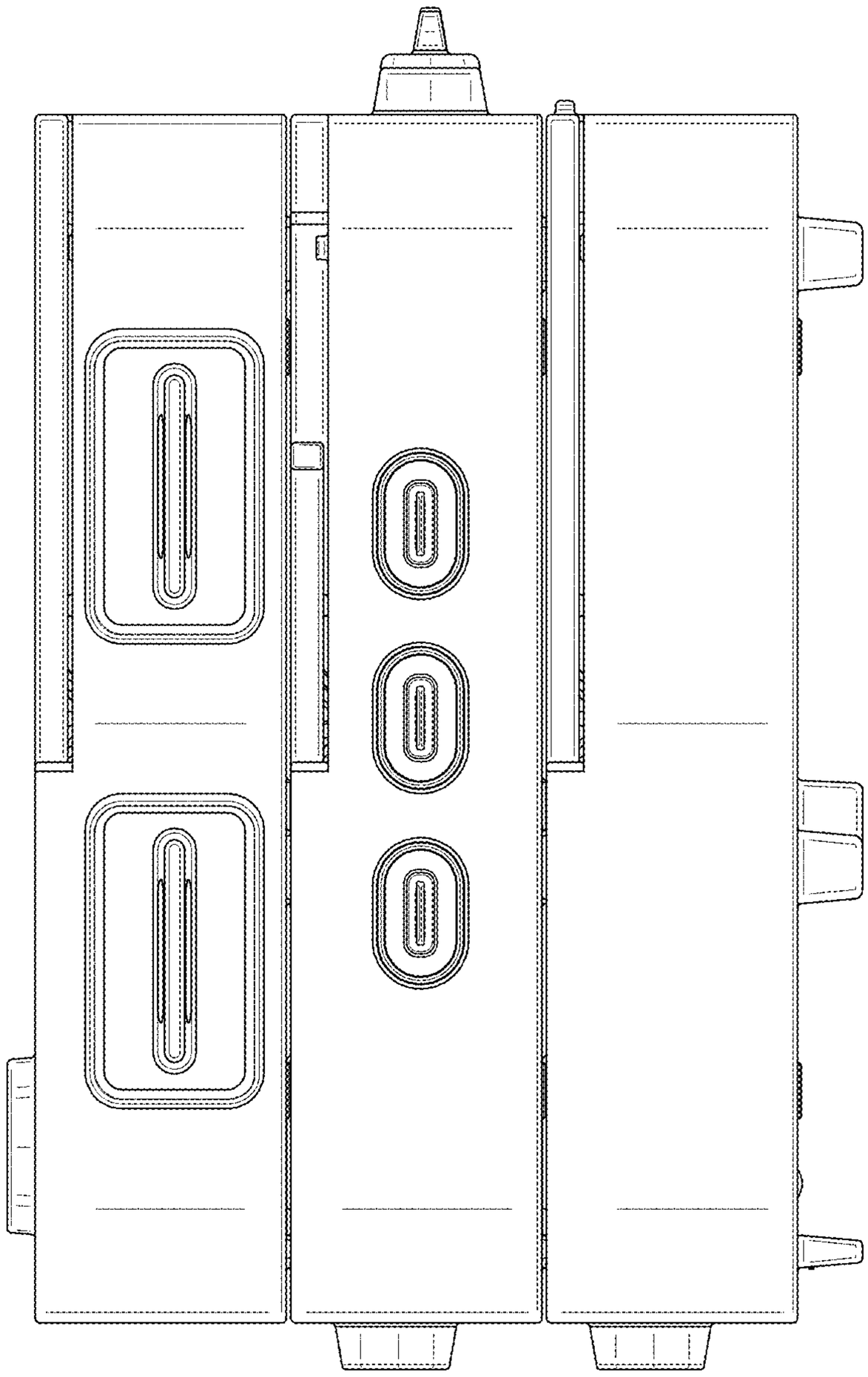

FIG. 7