US00D918867S

(12) United States Design Patent
Chong

(10) Patent No.: US D918,867 S
(45) Date of Patent: ** May 11, 2021

(54) **HEADPHONE**

(71) Applicant: **RAZER (ASIA-PACIFIC) PTE. LTD.**, Singapore (SG)

(72) Inventor: **Boon Sim Chong**, Singapore (SG)

(73) Assignee: **RAZER (ASIA-PACIFIC) PTE. LTD.**, Singapore (SG)

(**) Term: **15 Years**

(21) Appl. No.: **29/725,667**

(22) Filed: **Feb. 26, 2020**

Related U.S. Application Data

(63) Continuation of application No. 29/672,594, filed on Dec. 6, 2018, now Pat. No. Des. 887,391.

(51) **LOC (13) Cl.** **14-01**

(52) **U.S. Cl.**
USPC **D14/205**

(58) **Field of Classification Search**
USPC D14/205, 188, 192; D29/112; 2/209; 381/380, 381, 383, 370; 455/90.3, 575.1, 455/569.1
CPC H04R 25/00; H04R 25/02; H04R 1/1016; H04R 1/1066; H04R 5/033; H04R 5/0335; H04R 1/105; H04R 1/1008; H04R 1/1083; H04R 1/1091
See application file for complete search history.

(56) **References Cited**

U.S. PATENT DOCUMENTS

3,053,944 A * 9/1962 Weeks H04R 1/1066 381/377
3,815,155 A 6/1974 Davison et al.
D235,210 S 5/1975 Hill
4,471,496 A 9/1984 Gardner, Jr. et al.
D292,205 S 10/1987 Kikutani
4,905,322 A 3/1990 Aileo et al.
5,068,923 A 12/1991 Sjoqvist
D323,327 S 1/1992 Davidson
D326,456 S 5/1992 Hahn
(Continued)

FOREIGN PATENT DOCUMENTS

EM 006563276-0001 6/2019
EM 006563276-0002 6/2019
(Continued)

Primary Examiner — Paula Allen Greene
(74) *Attorney, Agent, or Firm* — Polsinelli PC

(57) **CLAIM**

I claim the ornamental design for a headphone, as shown and described.

DESCRIPTION

FIG. **1** is a perspective view of a first embodiment of a headphone, showing my new design;
FIG. **2** is a front elevational view thereof;
FIG. **3** is a rear elevational view thereof;
FIG. **4** is a left side elevational view thereof;
FIG. **5** is a right side elevational view thereof;
FIG. **6** is a top plan view thereof; and
FIG. **7** is a bottom plan view thereof.
FIG. **8** is a perspective view showing the headphone in a folded position thereof;
FIG. **9** is a front elevational view thereof;
FIG. **10** is a rear elevational view thereof;
FIG. **11** is a left side elevational thereof;
FIG. **12** is a right side elevational view thereof;
FIG. **13** is a top plan view thereof; and,
FIG. **14** is a bottom plan view thereof.
The dash-dot broken lines immediately adjacent the shaded areas encompassing unshaded regions, represent the bounds of the claimed design while all other broken lines are directed to environment and are for illustrative purposes only and form no part of the claimed design.

1 Claim, 10 Drawing Sheets

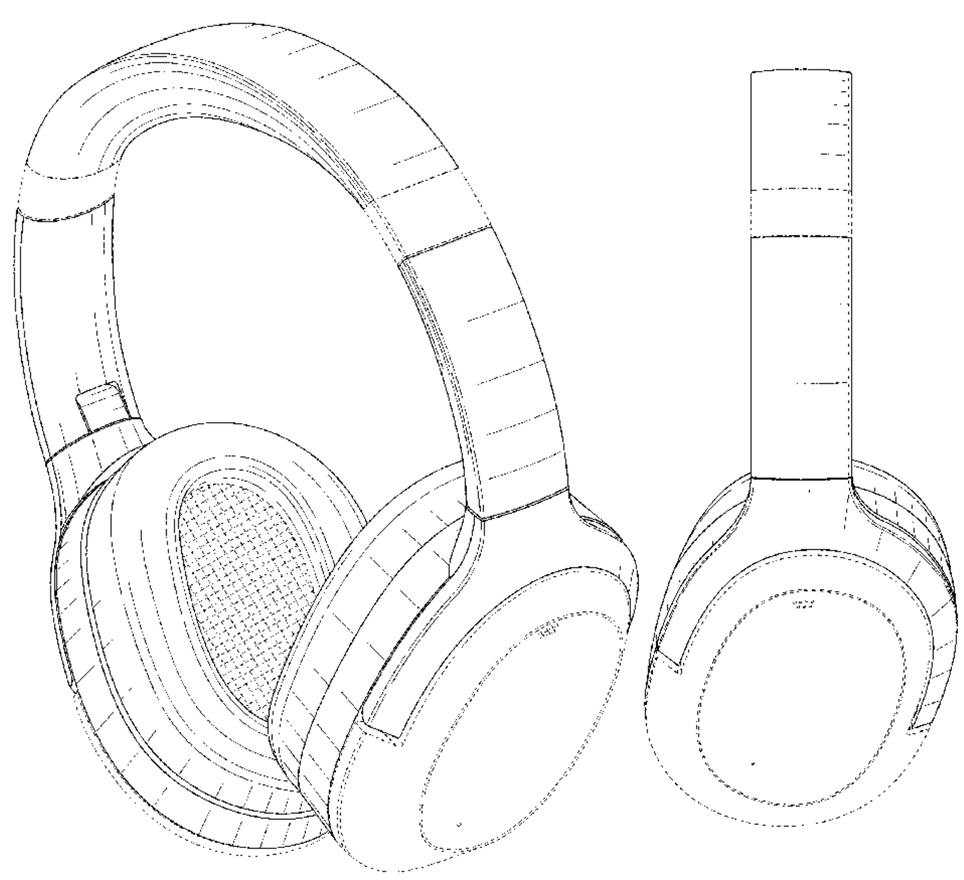

(56) **References Cited**

U.S. PATENT DOCUMENTS

D328,074 S 7/1992 Yamazaki et al.
D337,115 S 7/1993 Yamazaki et al.
D457,512 S 5/2002 Yoneda
7,072,483 B2 * 7/2006 Lenhard-Backhaus H04R 1/1066 381/370
D563,382 S 3/2008 Wikel
D567,215 S 4/2008 Lee
D581,394 S 11/2008 Lee
D585,871 S 2/2009 Lee
D592,639 S * 5/2009 Kuh D14/205
D600,674 S * 9/2009 Brennwald D14/205
D603,370 S 11/2009 Suzuki
D623,627 S 9/2010 Alden et al.
D641,003 S 7/2011 Alden
D642,554 S 8/2011 Schaal et al.
D650,356 S 12/2011 Alden et al.
8,098,872 B2 1/2012 Chang
D657,776 S * 4/2012 Lee D14/205
D662,080 S 6/2012 Carr et al.
D665,775 S * 8/2012 Katsumata D14/205
D665,776 S 8/2012 Alden et al.
D665,777 S 8/2012 Alden et al.
D669,450 S * 10/2012 Katsumata D14/205
D673,136 S 12/2012 Kelly et al.
D674,372 S 1/2013 Kelly et al.
D677,241 S 3/2013 Kelly et al.
D677,243 S 3/2013 Kitayama et al.
D683,717 S 6/2013 Kelly et al.
D685,759 S 7/2013 Kelly et al.
D689,464 S 9/2013 Bonahoom et al.
D691,582 S 10/2013 Nguyen et al.
D693,793 S 11/2013 Kelly et al.
D698,334 S * 1/2014 Fujioka D14/205
D699,216 S 2/2014 Bonahoom et al.
D701,193 S 3/2014 Kelly et al.
D705,750 S * 5/2014 Wu H04R 1/1066 D14/205
D706,240 S * 6/2014 Szymanski H04R 1/1066 D14/205
D706,241 S * 6/2014 Szymanski H04R 1/1066 D14/205
D707,654 S 6/2014 Nguyen et al.
8,767,996 B1 7/2014 Lin et al.
D719,136 S 12/2014 Schaal et al.
D721,052 S 1/2015 Carr et al.
D727,283 S 4/2015 Dryden et al.
D729,194 S * 5/2015 Boeckel D14/205
D729,196 S 5/2015 Liu
D732,000 S 6/2015 Brunner et al.
D733,092 S 6/2015 Gan
D734,297 S 7/2015 Sasaki et al.
D741,289 S 10/2015 Schaal et al.
9,161,117 B2 * 10/2015 Blonder H04R 1/1066
D746,790 S 1/2016 Strasberg et al.
D757,680 S 5/2016 Kelly et al.
D758,337 S * 6/2016 Szymanski D14/205
D765,055 S 8/2016 Hsieh et al.
D767,531 S * 9/2016 Szymanski D14/205
D786,824 S * 5/2017 Hembrey D14/205
D787,470 S 5/2017 Kelly et al.
D805,055 S 12/2017 Kelly et al.
D811,365 S 2/2018 Czaniecki
D817,303 S 5/2018 Tragatschnig
D828,326 S 9/2018 Ye
D840,370 S 2/2019 Kelly et al.
10,250,966 B2 4/2019 Zheng et al.
D851,627 S 6/2019 ter Laag et al.
D854,513 S 7/2019 Miyake et al.
D859,354 S * 9/2019 Xia D14/205
D864,900 S * 10/2019 Miller D14/205
D868,731 S * 12/2019 Jung D14/205
D869,437 S 12/2019 Hu
D887,391 S * 6/2020 Chong D14/205
D901,436 S * 11/2020 Peng D14/205
2005/0053255 A1 3/2005 Harris et al.
2008/0056525 A1 * 3/2008 Fujiwara H04R 1/1066 381/374
2010/0310093 A1 12/2010 Semcken
2011/0002478 A1 1/2011 Pollard et al.
2013/0343591 A1 * 12/2013 Brunner H04R 1/1075 381/371
2014/0056459 A1 2/2014 Oishi et al.
2014/0254854 A1 * 9/2014 Blonder H04R 1/1066 381/371
2014/0363016 A1 * 12/2014 Blonder H04R 1/1041 381/74
2018/0270556 A1 * 9/2018 Kelley H04R 1/1008

FOREIGN PATENT DOCUMENTS

EM 006680799-0001 8/2019
EM 007434089-0005 * 12/2019
EM 008408066-0001 * 2/2021

* cited by examiner

FIG. 1

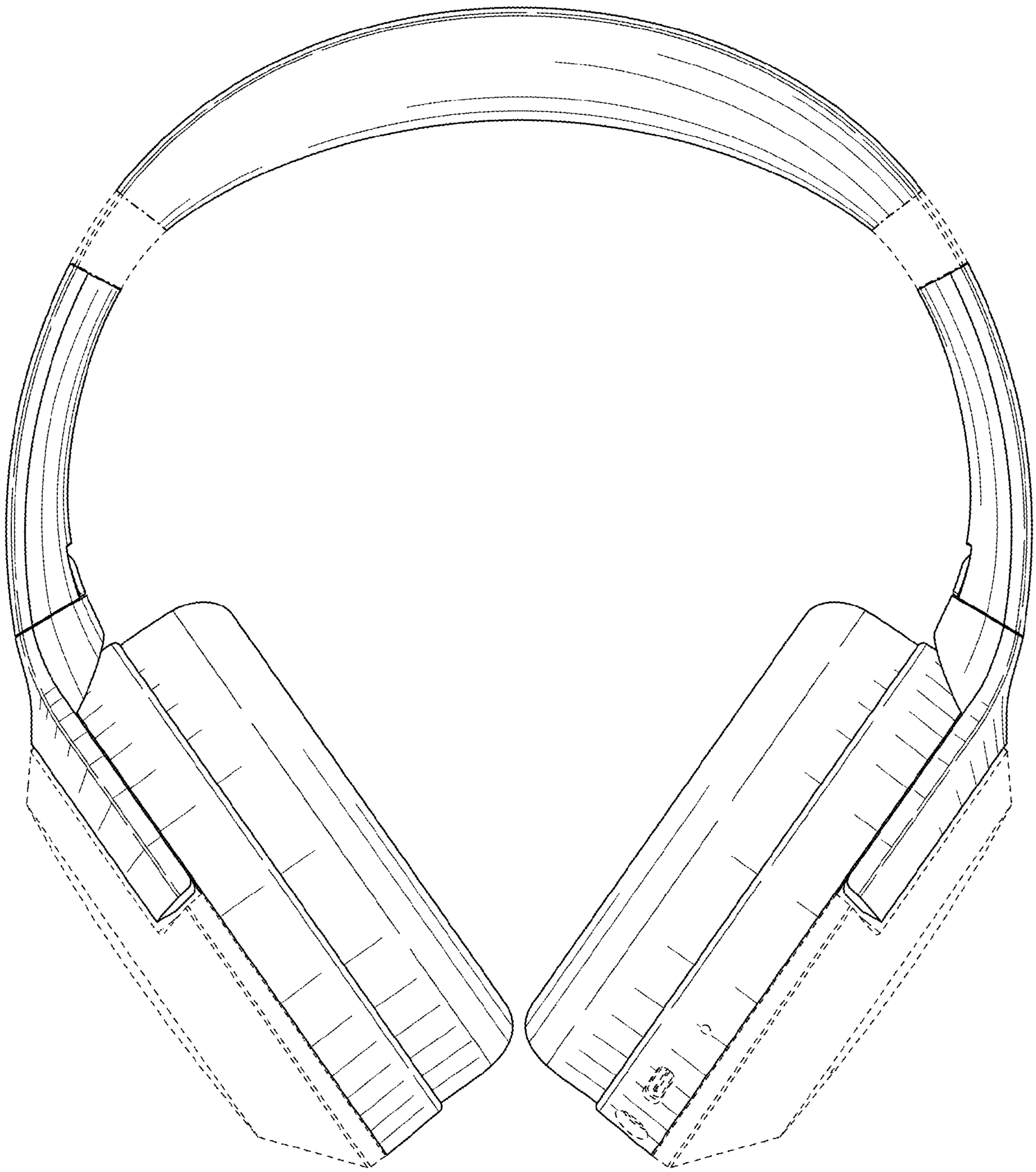

FIG. 2

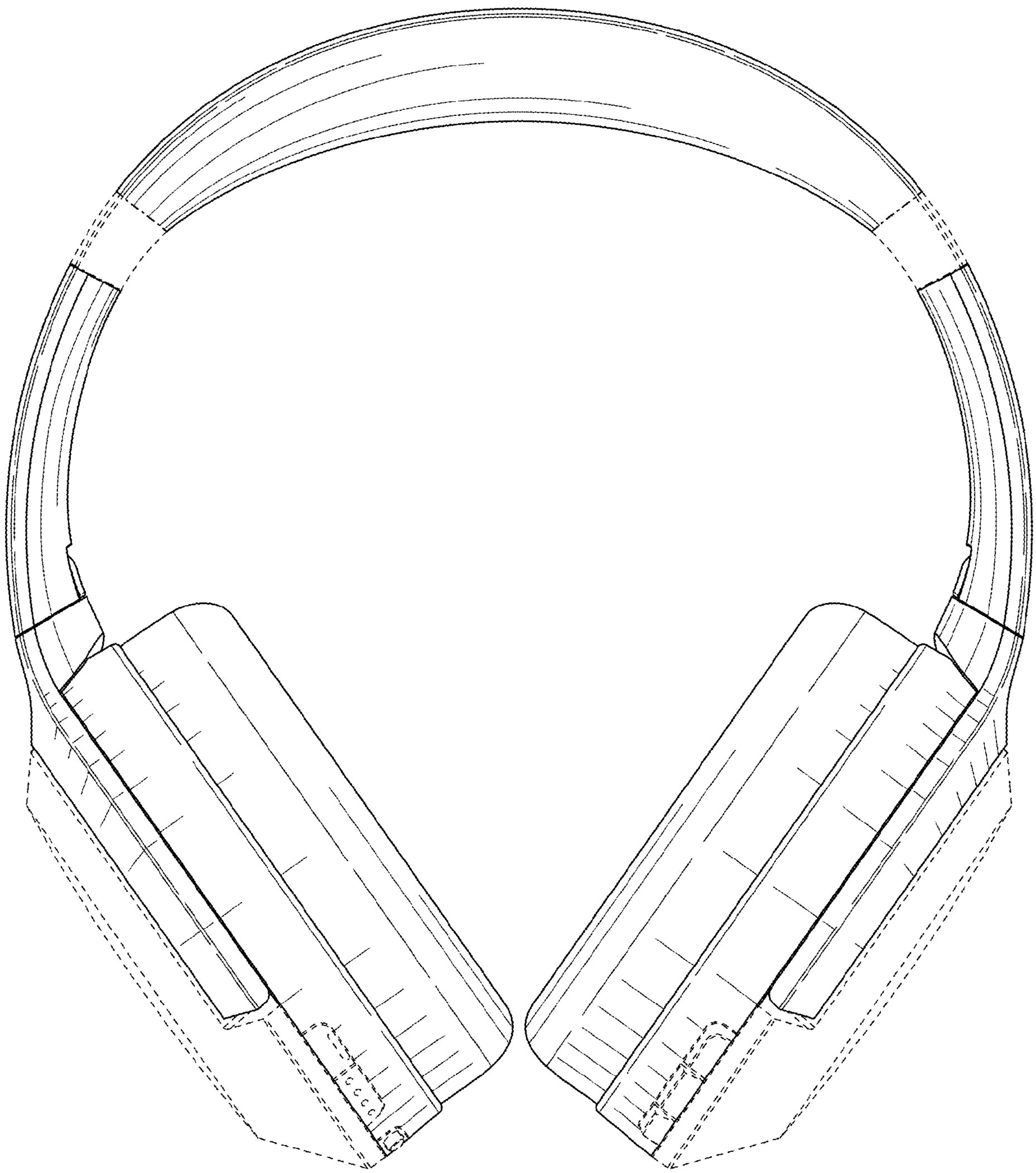

FIG. 3

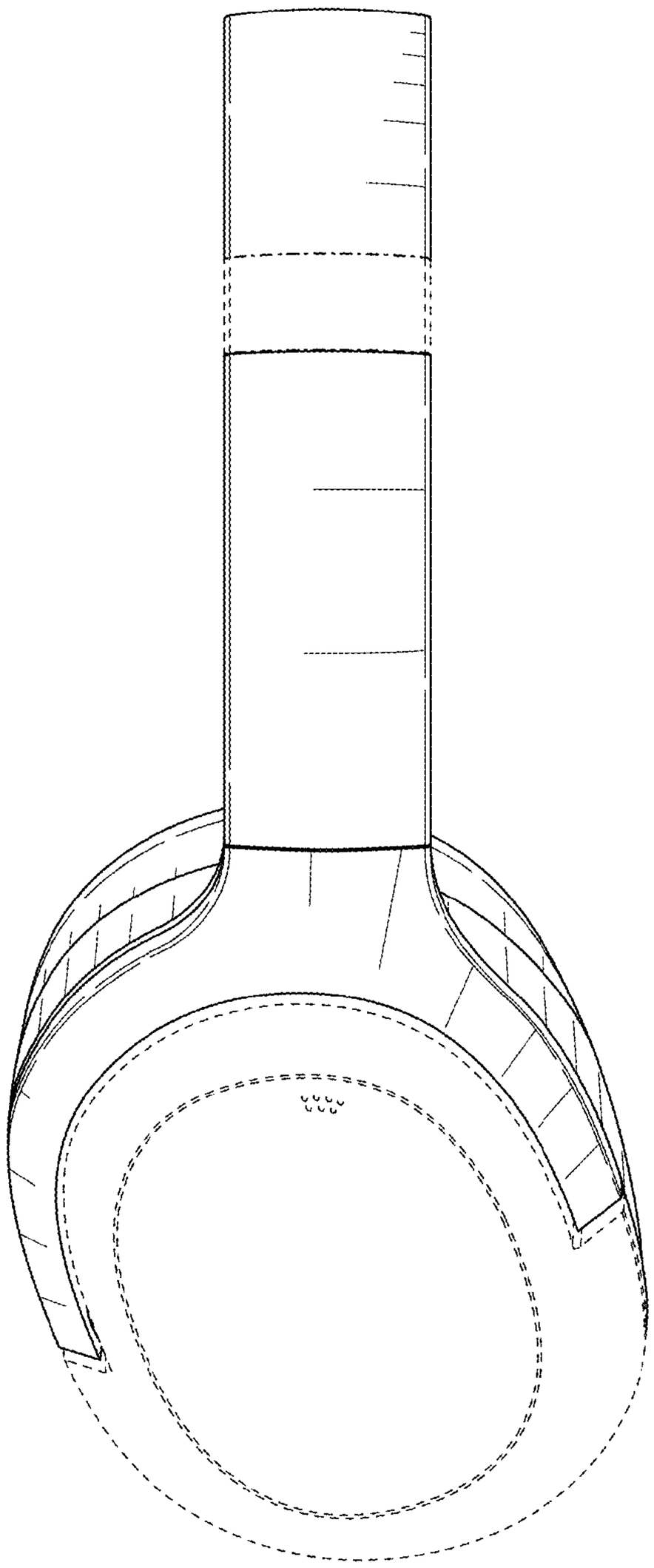

FIG. 4

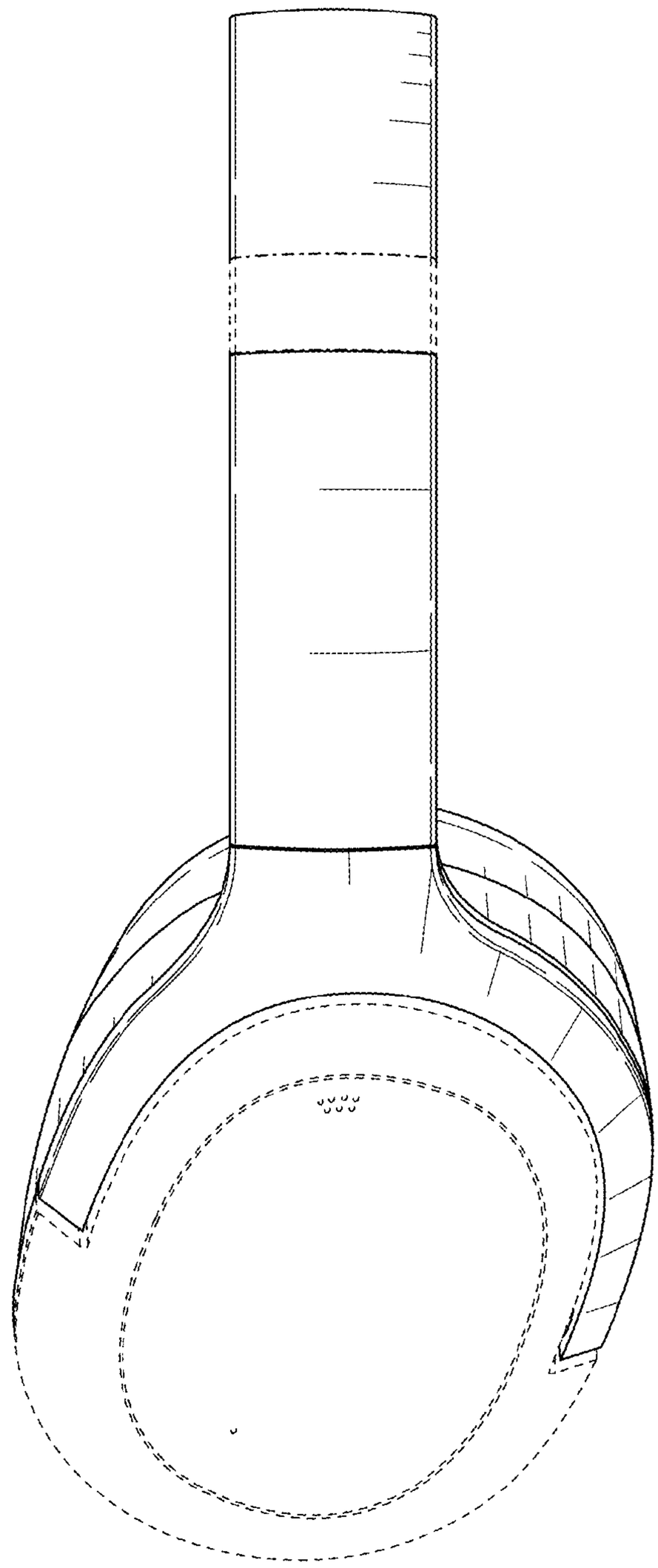

FIG. 5

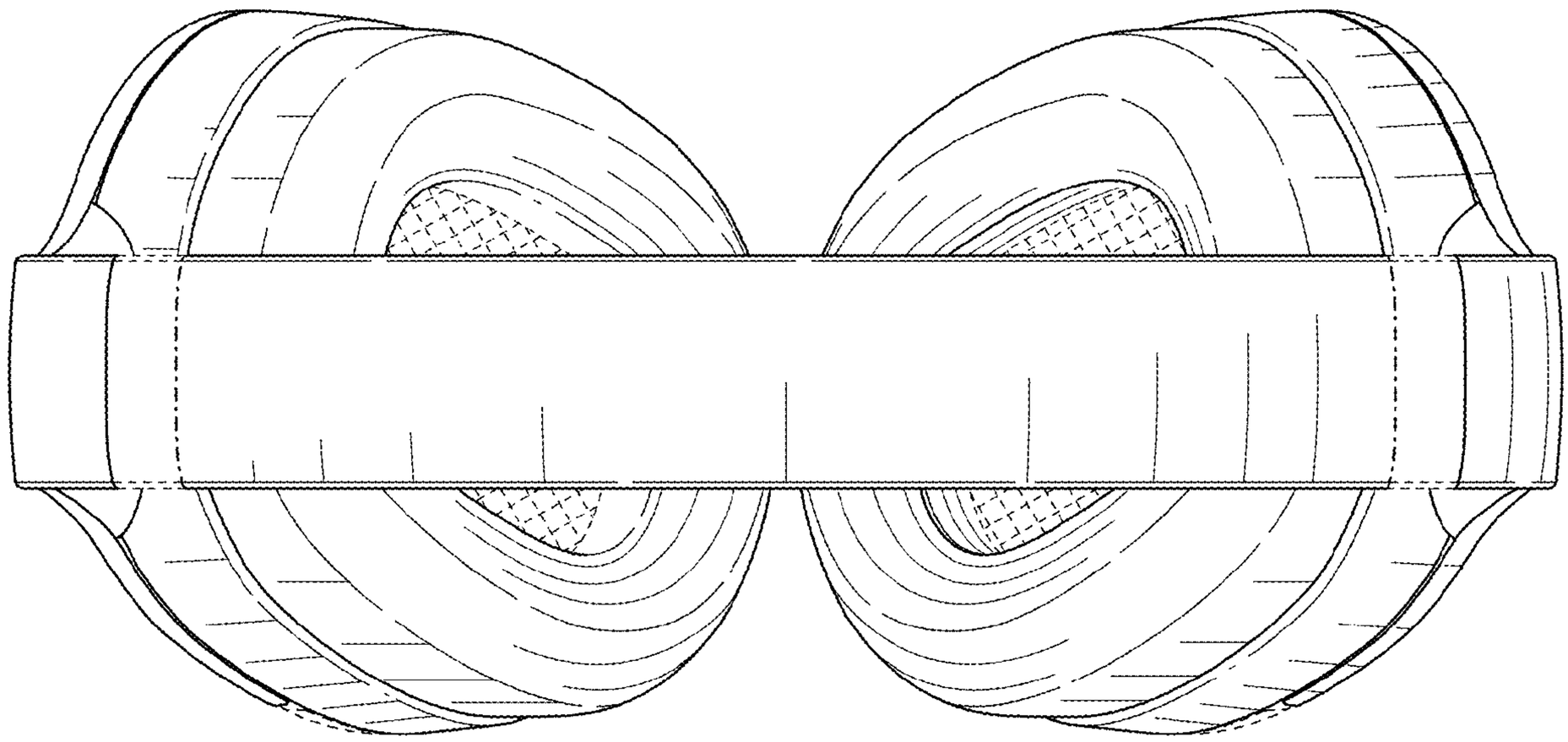

FIG. 6

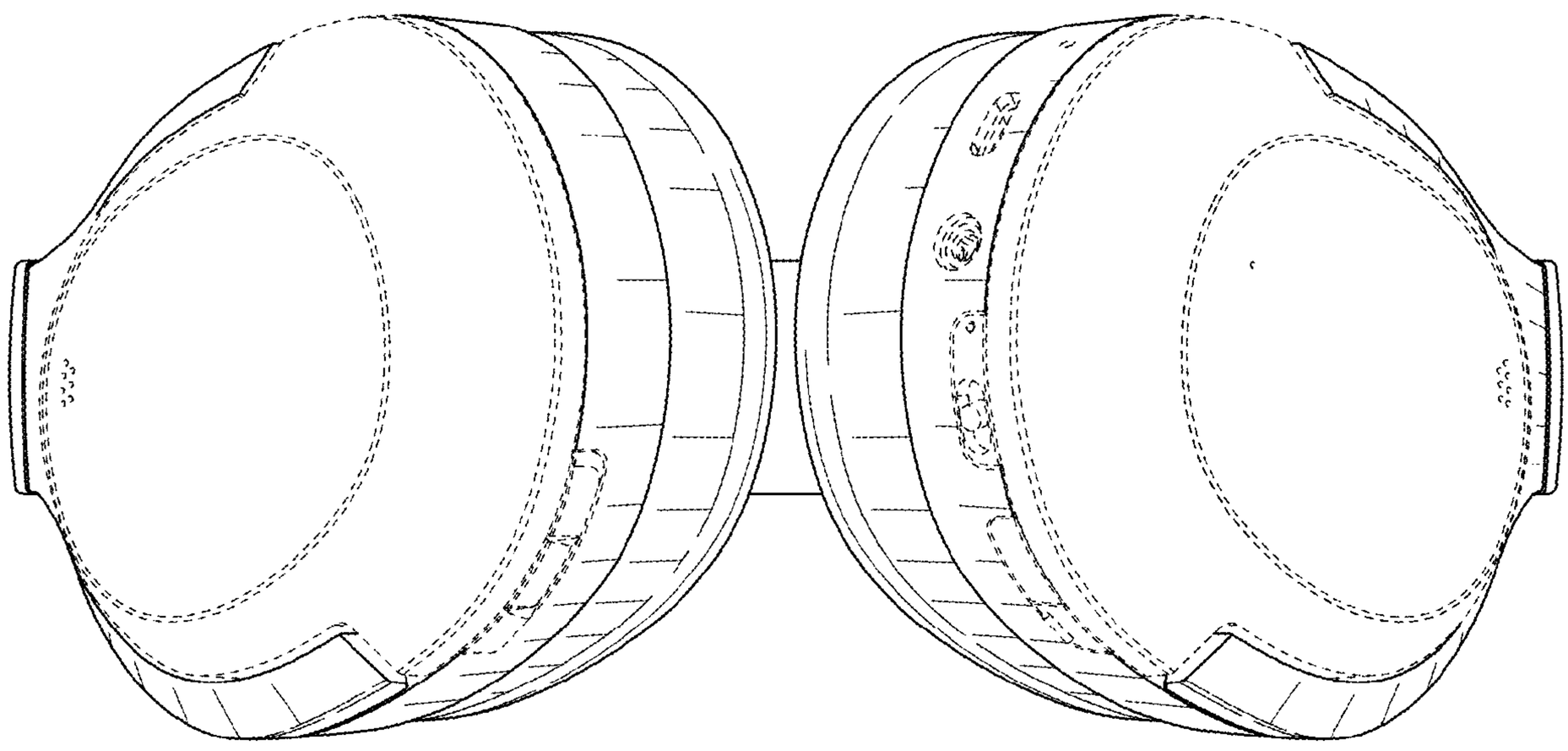

FIG. 7

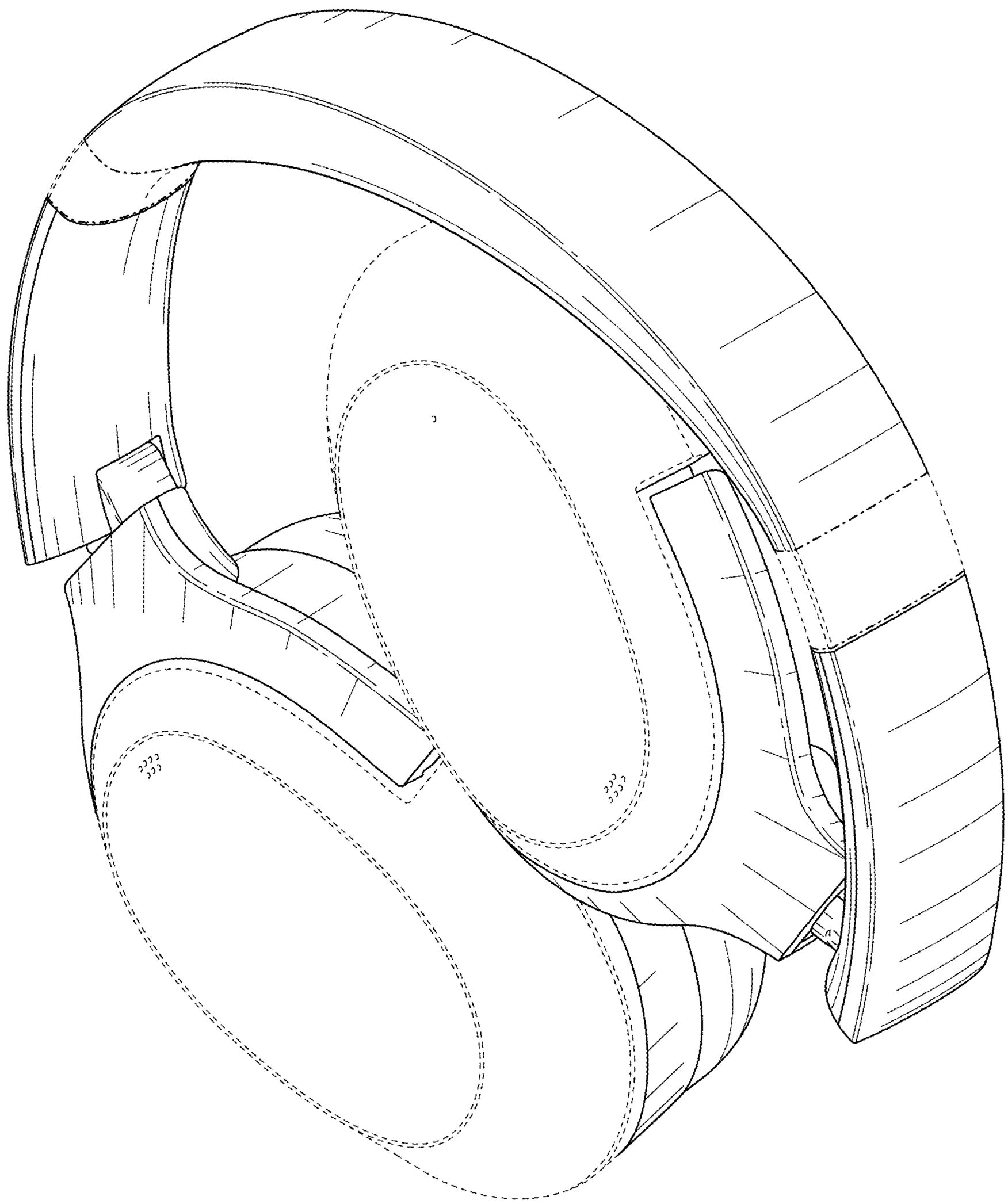

FIG. 8

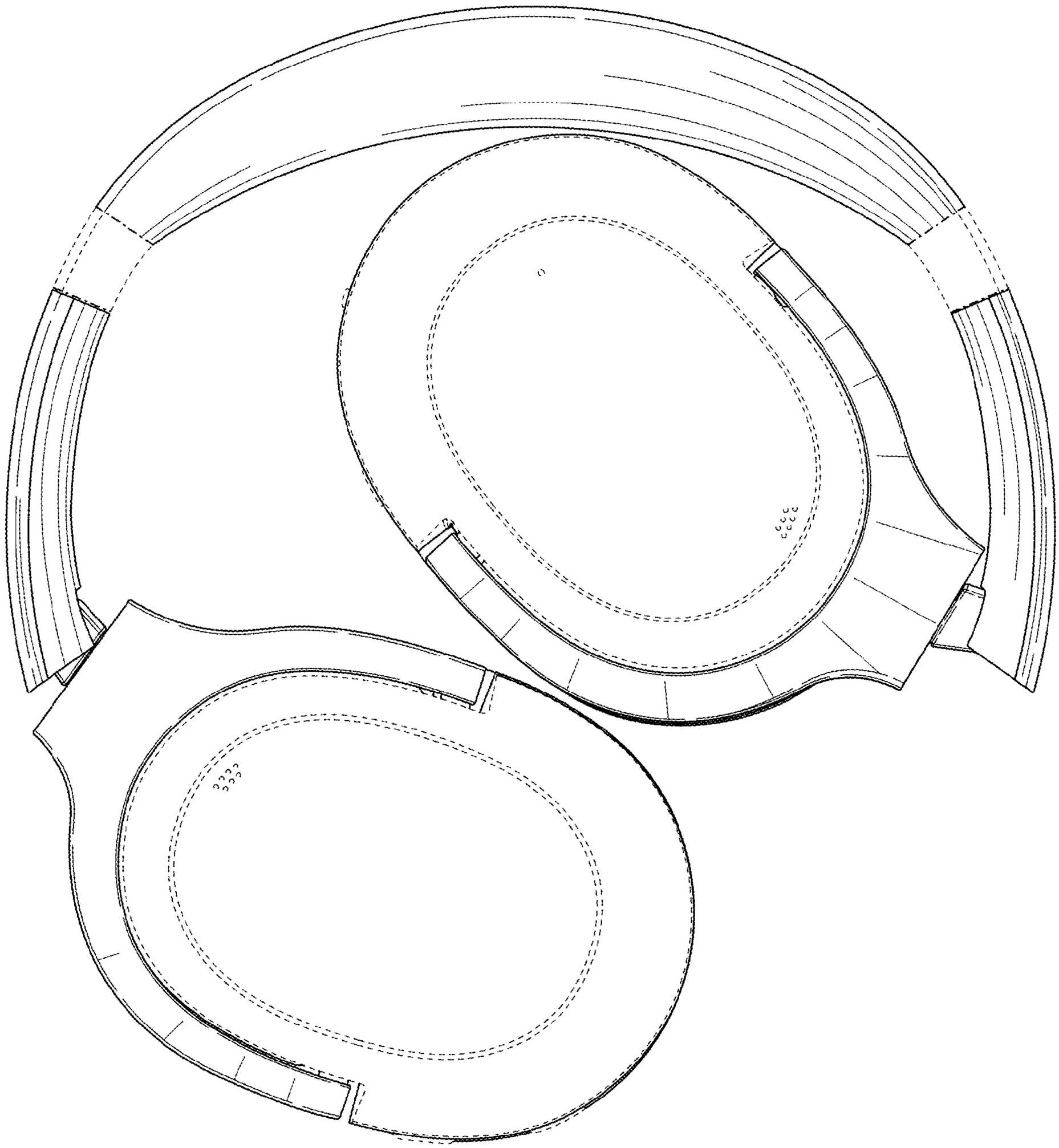

FIG. 9

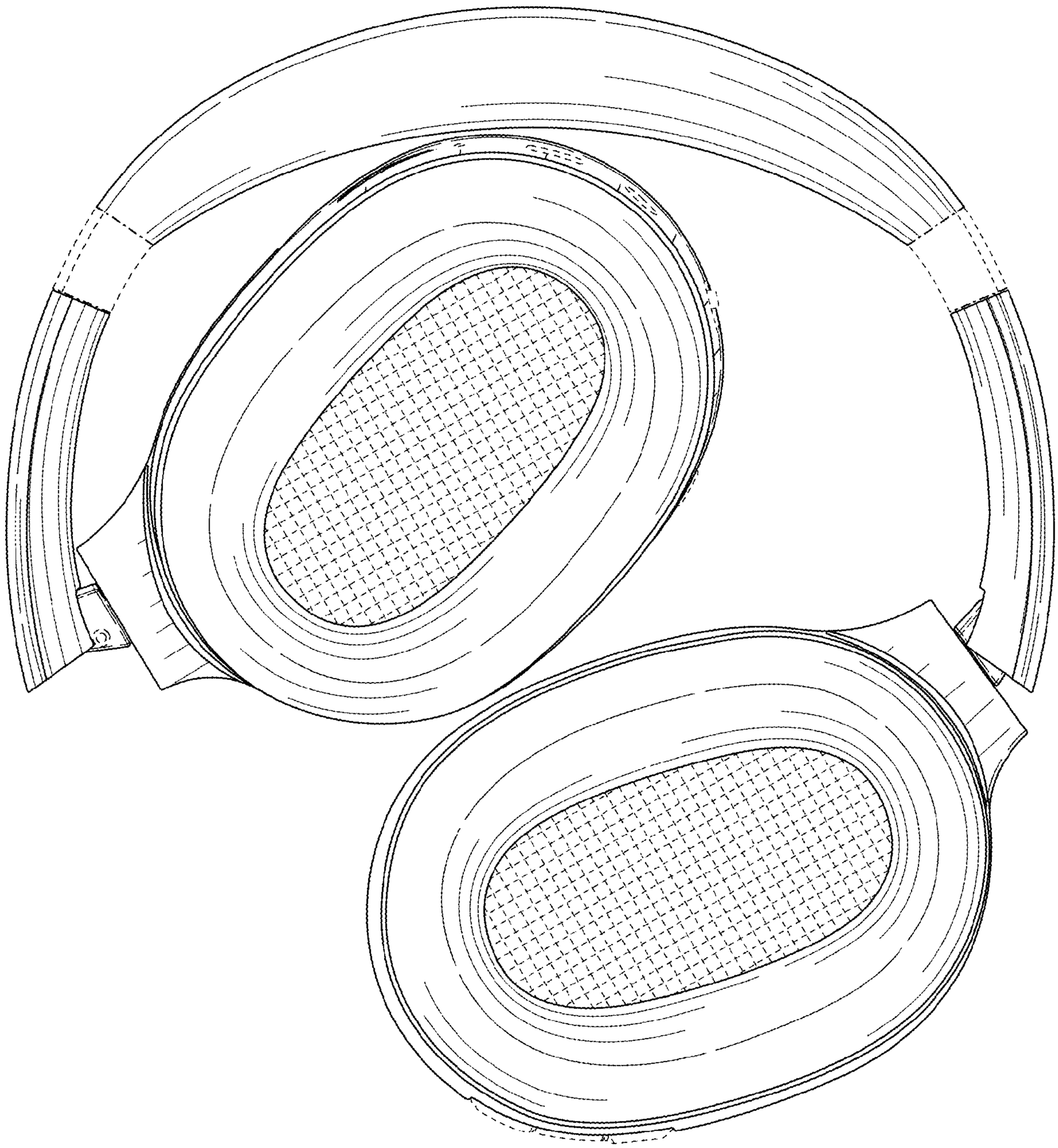

FIG. 10

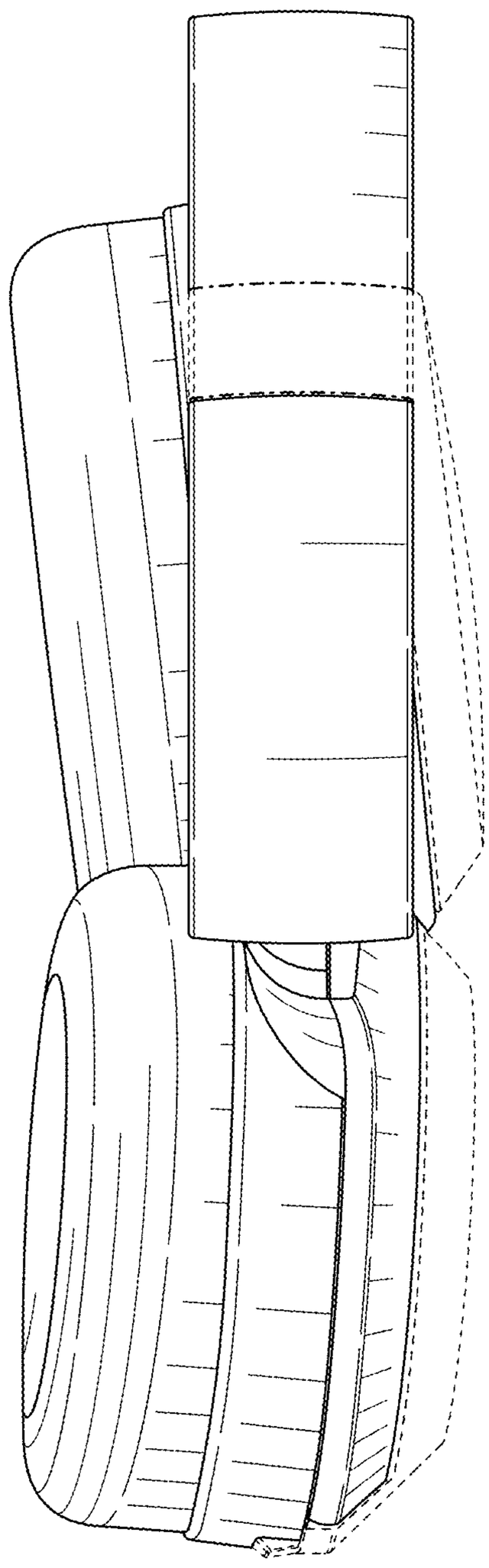

FIG. 11

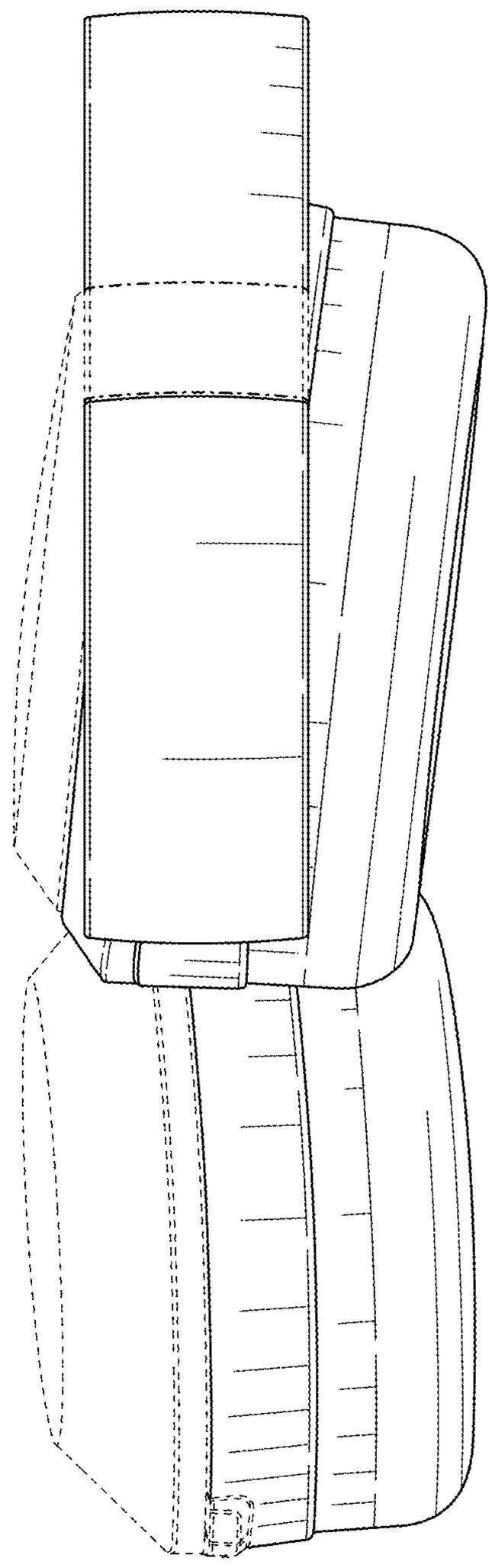

FIG. 12

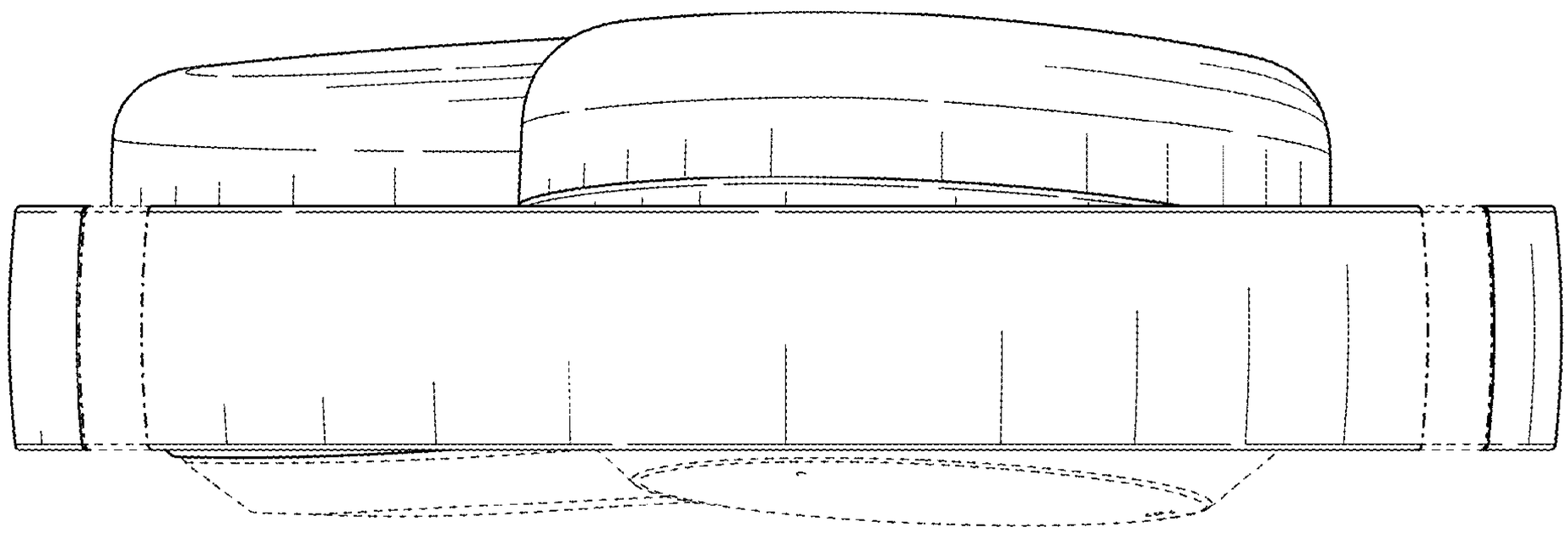

FIG. 13

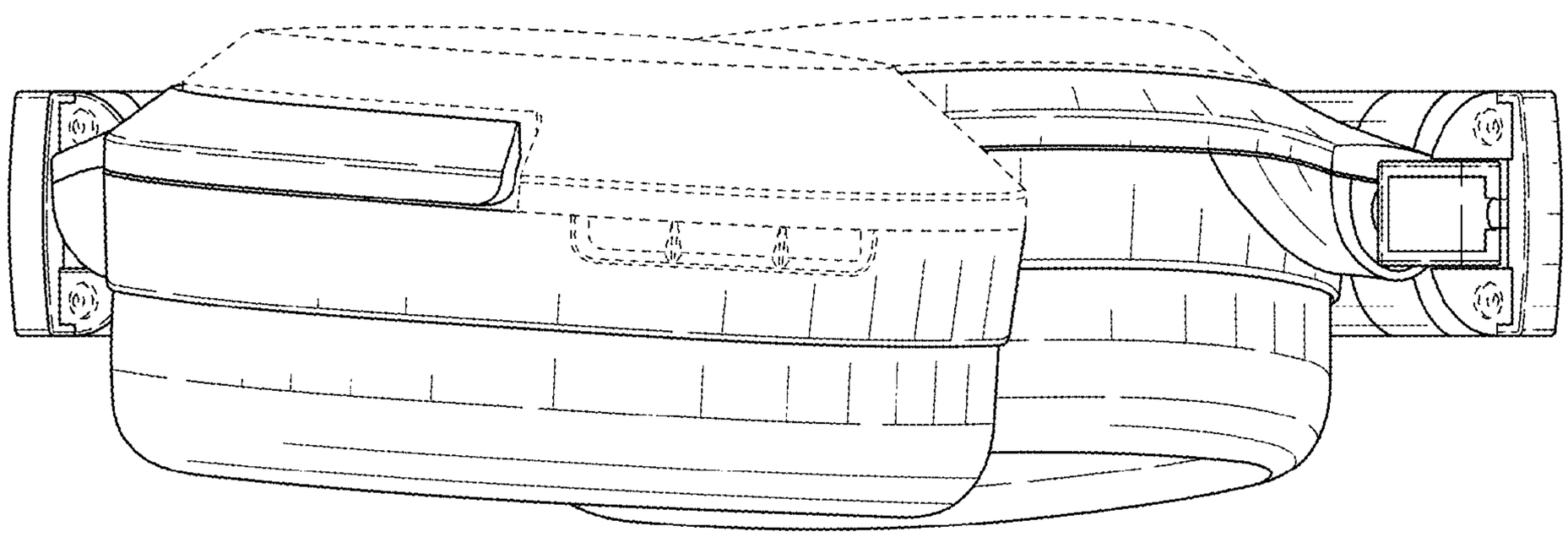

FIG. 14