US00D918832S

(12) United States Design Patent

Shen et al.

(10) Patent No.: US D918,832 S
(45) Date of Patent: ** May 11, 2021

(54) **BATTERY**

(71) Applicant: **ZEBRA TECHNOLOGIES CORPORATION**, Lincolnshire, IL (US)

(72) Inventors: **Mu-Kai Shen**, Taipei (TW); **Edward M. Voli**, East Setauket, NY (US); **I-Heng Tsai**, Taipei (TW); **Man-Ching Yen**, Taipei (TW)

(73) Assignee: **Zebra Technologies Corporation**, Lincolnshire, IL (US)

(**) Term: **15 Years**

(21) Appl. No.: **29/752,231**

(22) Filed: **Sep. 25, 2020**

Related U.S. Application Data

(63) Continuation of application No. 29/670,720, filed on Nov. 19, 2018, now Pat. No. Des. 900,021.

(51) **LOC (13) Cl.** **13-02**

(52) **U.S. Cl.**
USPC **D13/108**

(58) **Field of Classification Search**
USPC D13/102–110, 118–119, 184, 199; D14/356, 432
CPC Y02E 60/10; Y02E 60/12; Y02E 60/122; Y02E 60/124; Y02E 60/50; H01M 2/02; H01M 2/022; H01M 2/0202; H01M 2/0207; H01M 2/0212; H01M 2/1061; H01M 2/1022; H01M 2/1055; H01M 2/1066; H01M 2/105; H01M 2/20; H01M 2/204; H01M 2/206; H01M 10/44; H01M 10/46; H01M 10/465; H01M 10/482; H01M 2200/30; H01M 2250/30; H01M 2250/40; H01M 2200/00; H01M 2/1016; H02J 7/00; H02J 7/0003; H02J 7/0011; H02J 7/0013; H02J 7/0054; H02J 7/0055; H02J 7/0057; H02J 2007/0062
See application file for complete search history.

(56) **References Cited**

U.S. PATENT DOCUMENTS

D285,569	S	*	9/1986	Reitz	D14/438
D303,524	S		9/1989	Siegner et al.	
D397,670	S		9/1998	Davies et al.	
D400,161	S	*	10/1998	Nagele	D13/103
D404,721	S	*	1/1999	Tennefoss	D13/184
D481,008	S		10/2003	Wade	
D488,436	S		4/2004	Wulff	
D492,248	S		6/2004	Gregory et al.	
D504,659	S		5/2005	Voli et al.	
D520,444	S		5/2006	Liu	
D525,593	S	*	7/2006	Bailey	D13/177
D562,760	S		2/2008	Hanks	

(Continued)

OTHER PUBLICATIONS

MC9200 Series: EMC Configuration and Accessories Guide, pub: Jan. 2018, p. 18.

Primary Examiner — Nathaniel D. Buckner

(57) **CLAIM**

We claim the ornamental design for a battery, as shown and described.

DESCRIPTION

FIG. **1** is a front perspective view of an example battery;
FIG. **2** is a rear perspective view thereof;
FIG. **3** is a top view thereof;
FIG. **4** is a bottom view thereof;
FIG. **5** is a first side view thereof;
FIG. **6** is a second side view thereof;
FIG. **7** is a front view thereof; and,
FIG. **8** is a rear view thereof.
The broken lines in the figures depict portions of the battery which form no part of the claimed design.

1 Claim, 6 Drawing Sheets

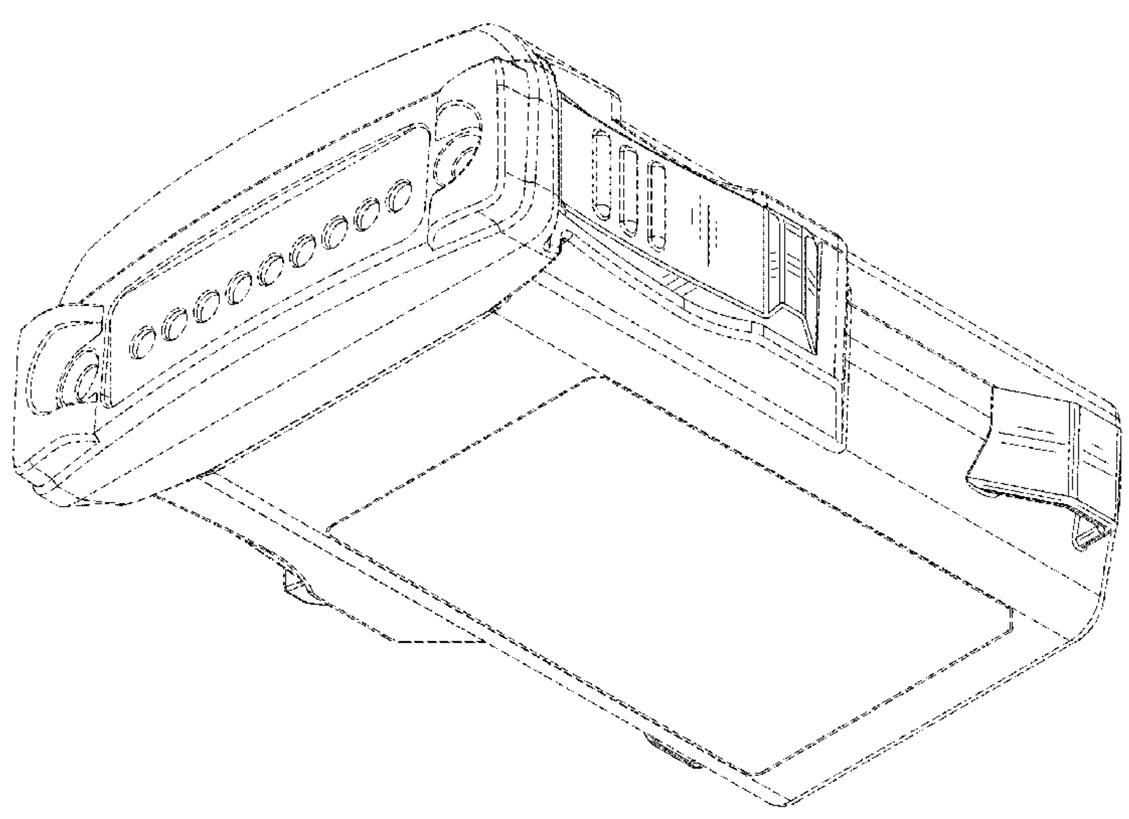

(56) **References Cited**

U.S. PATENT DOCUMENTS

D571,718	S		6/2008	Morris et al.	
D578,959	S		10/2008	Morishita et al.	
D580,352	S		11/2008	Croley	
D580,851	S	*	11/2008	Kumthampinij	D13/103
D587,647	S		3/2009	Croley et al.	
D613,244	S		4/2010	Palmer et al.	
D624,011	S	*	9/2010	Bertagnole	D13/103
D632,643	S		2/2011	Tanaka et al.	
D642,517	S		8/2011	Inman et al.	
D654,850	S		2/2012	Obata	
D654,853	S	*	2/2012	Bacon	D13/103
D660,788	S		5/2012	Ziring et al.	
D680,061	S		4/2013	Jiang et al.	
D712,347	S		9/2014	Awiszus et al.	
D766,175	S		9/2016	Tsiopanos et al.	
D810,677	S	*	2/2018	Chen	D13/103
D816,606	S	*	5/2018	Georgiades	D13/108
D817,266	S	*	5/2018	Peng	D13/103
D836,066	S	*	12/2018	Lim	D13/103
D858,433	S	*	9/2019	Gan	D13/103
D900,021	S	*	10/2020	Shen	D13/103

* cited by examiner

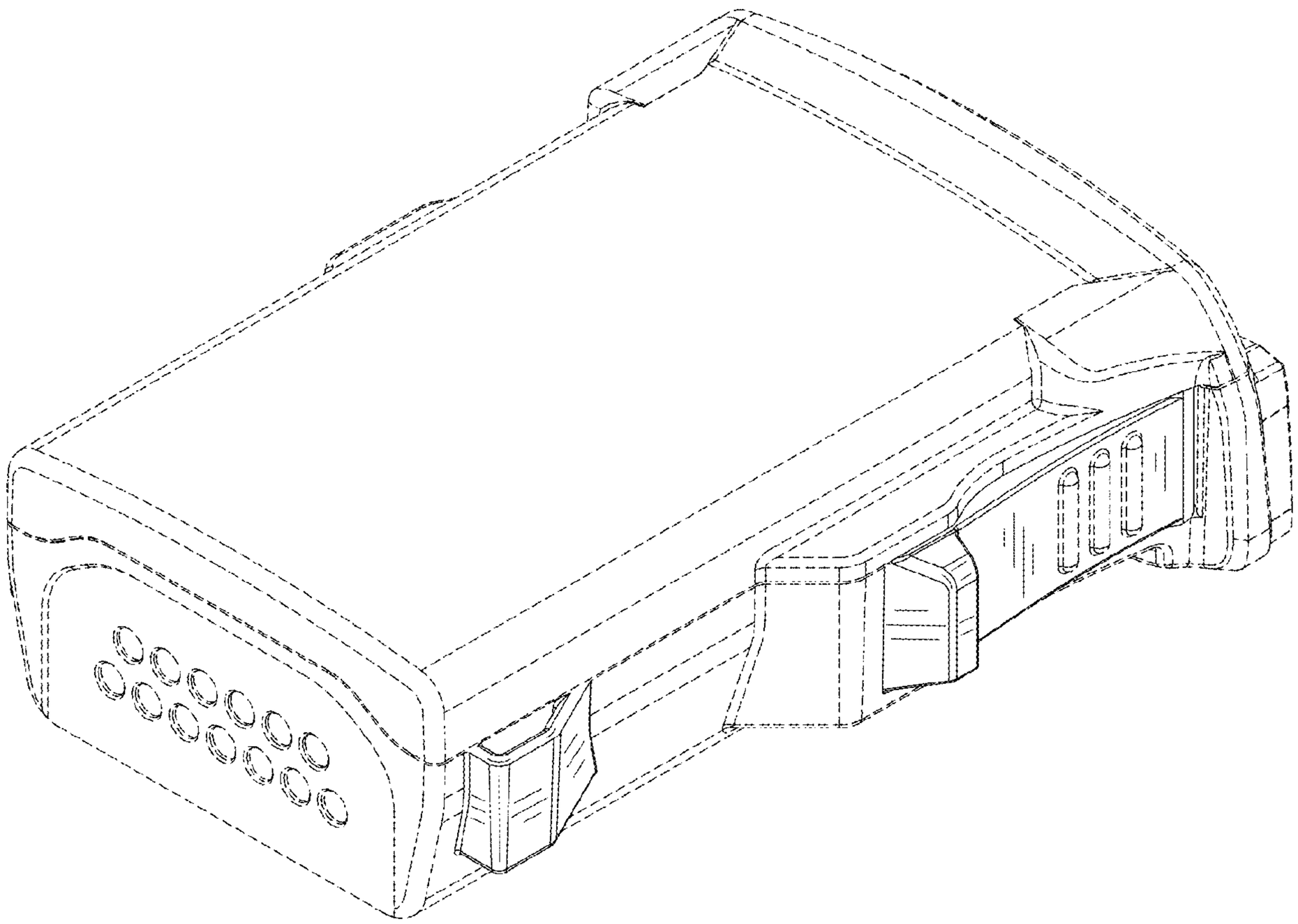

FIG. 1

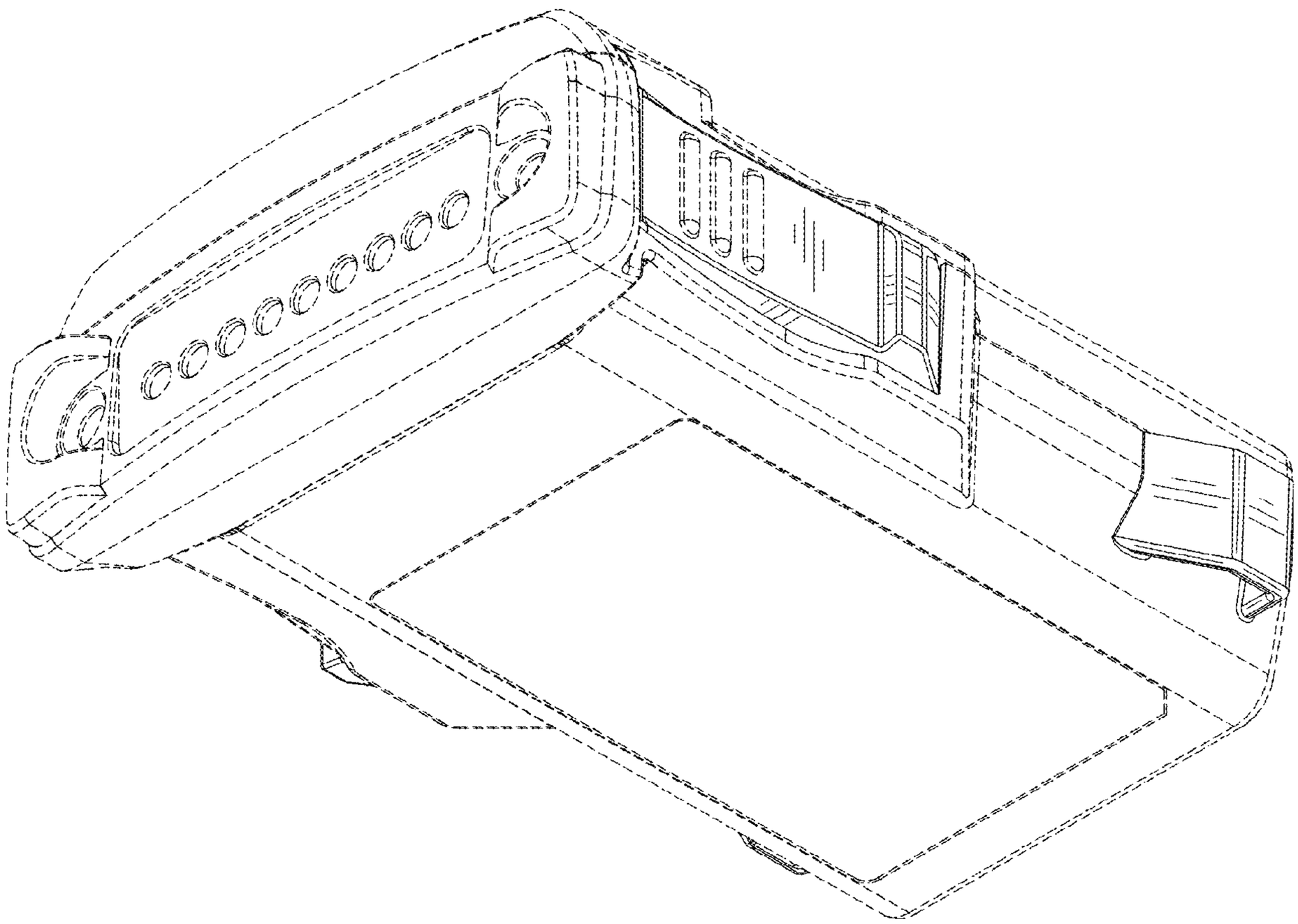

FIG. 2

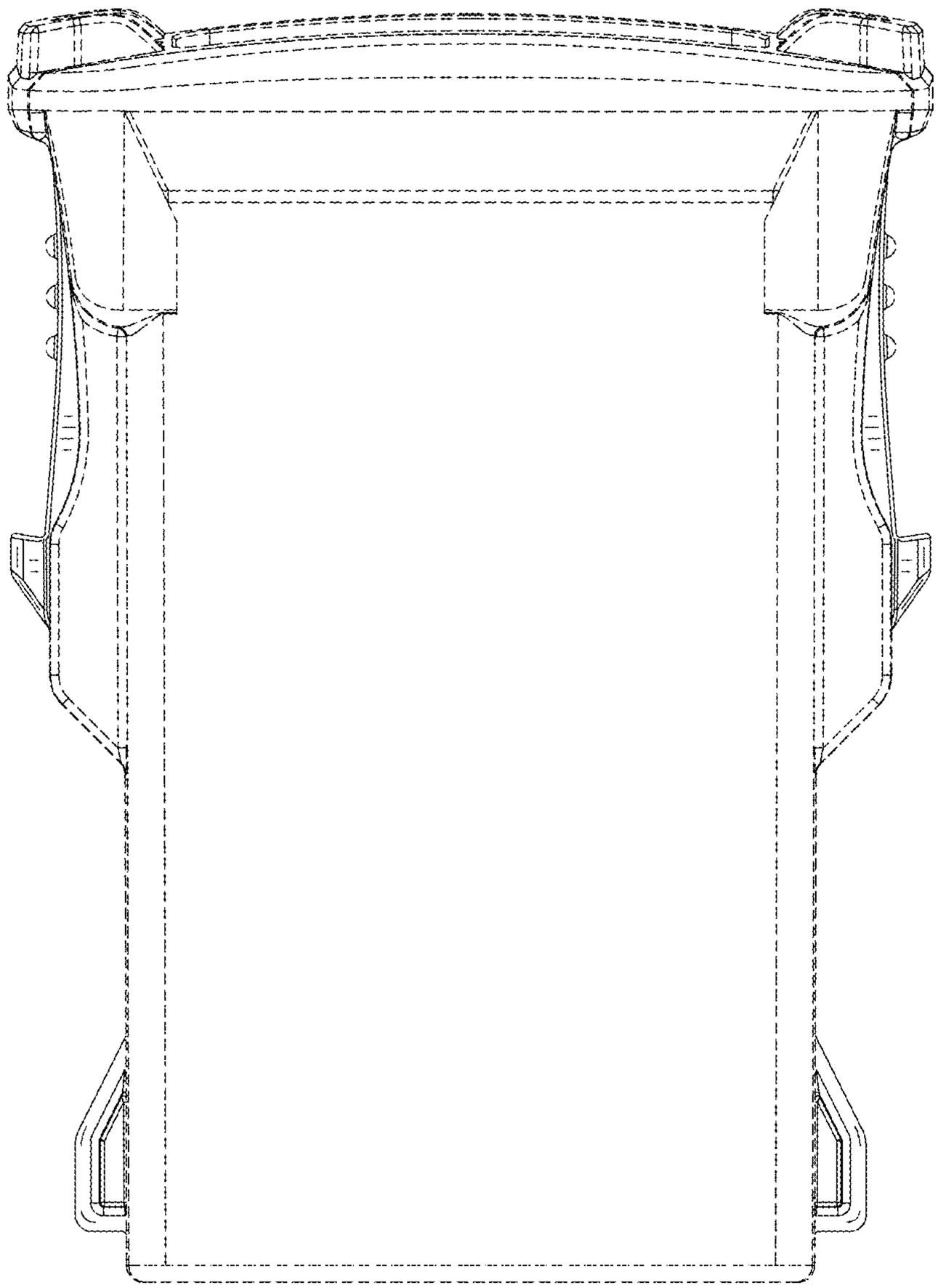

FIG. 3

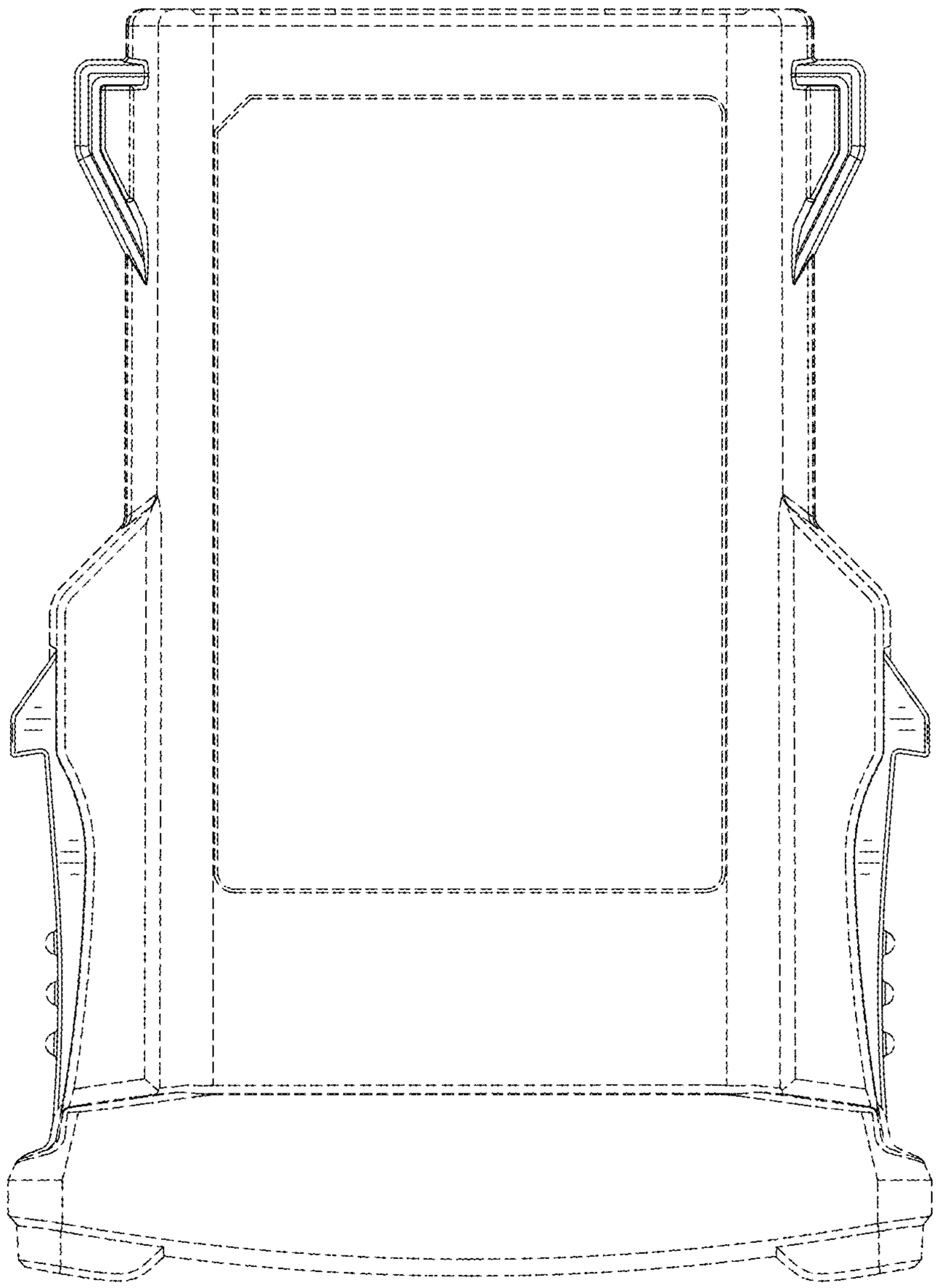

FIG. 4

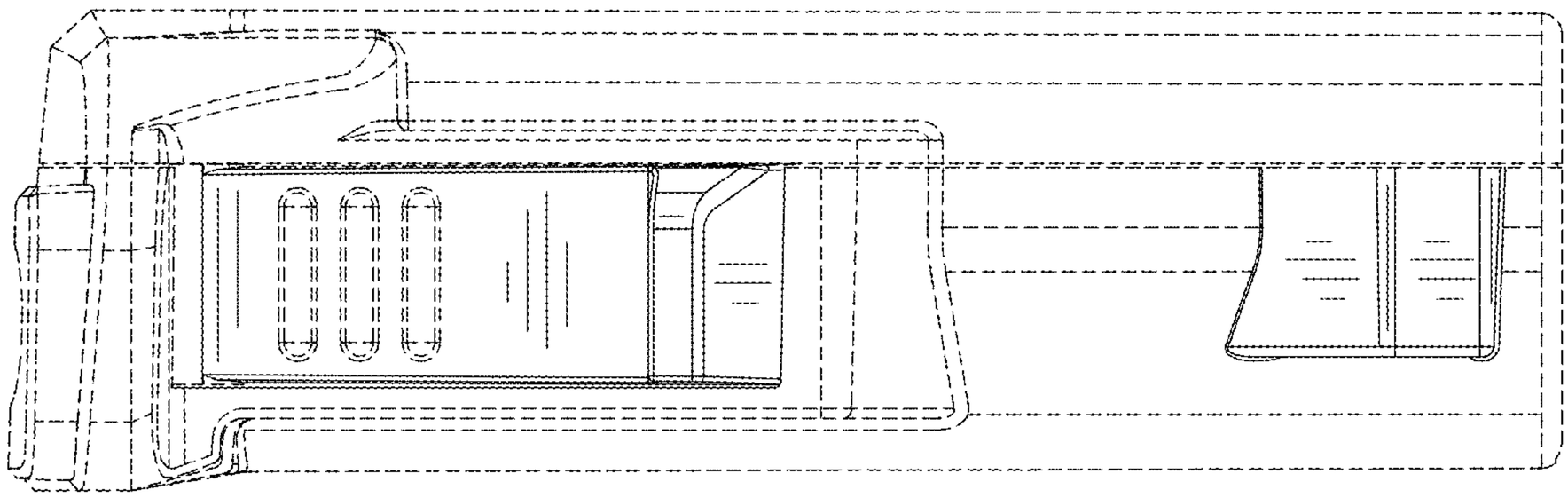

FIG. 5

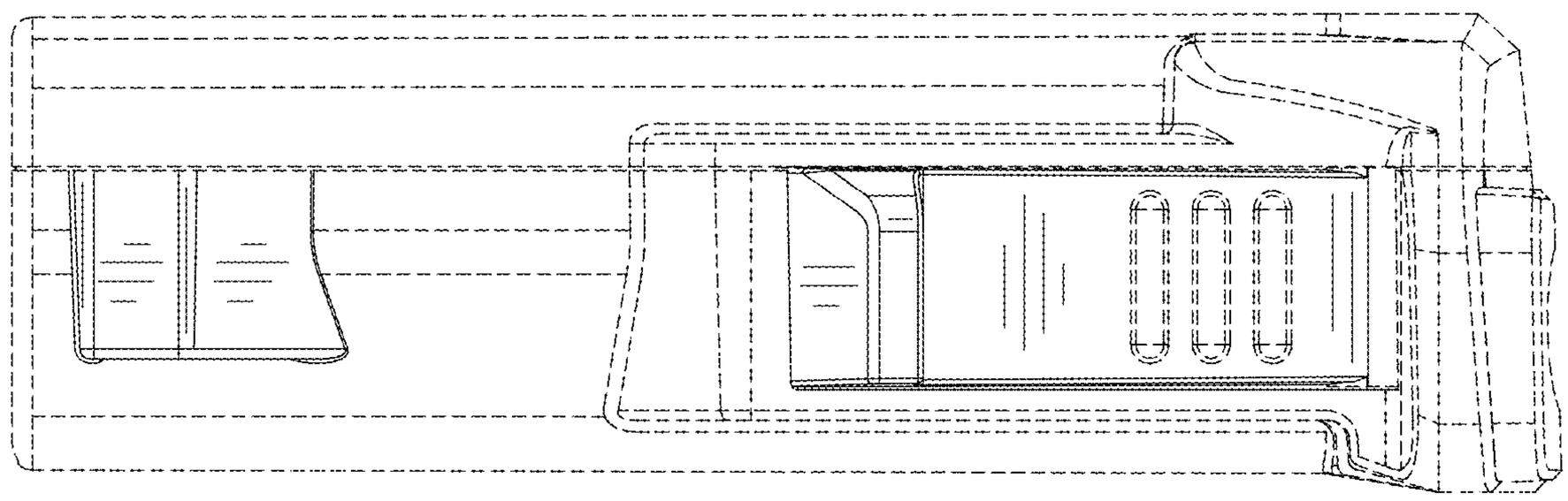

FIG. 6

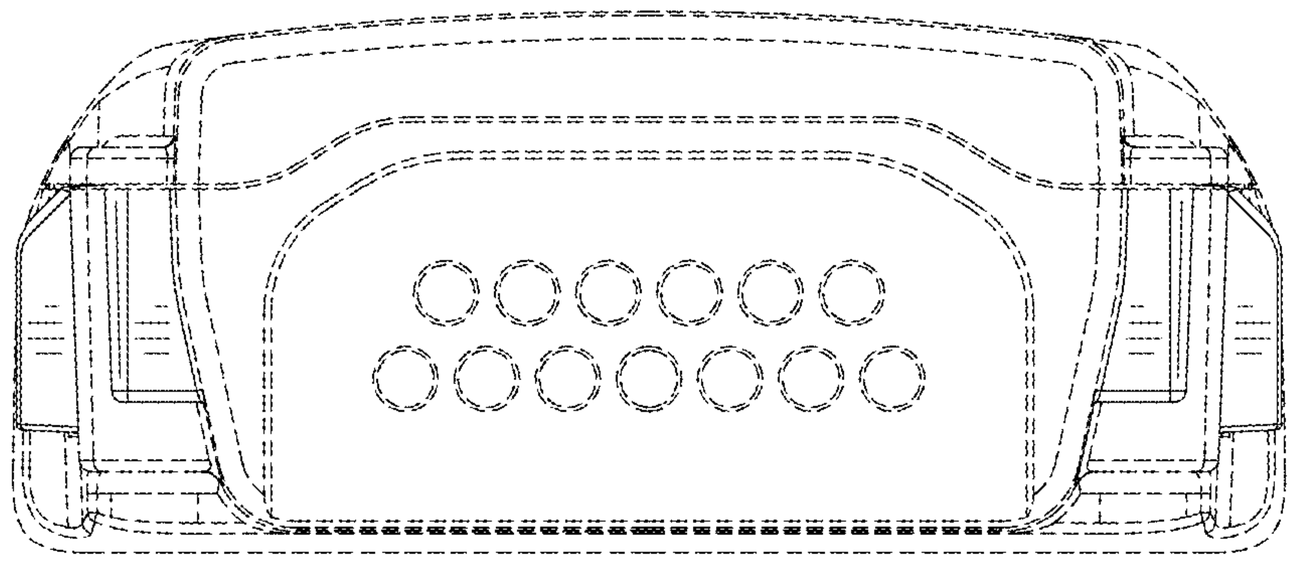

FIG. 7

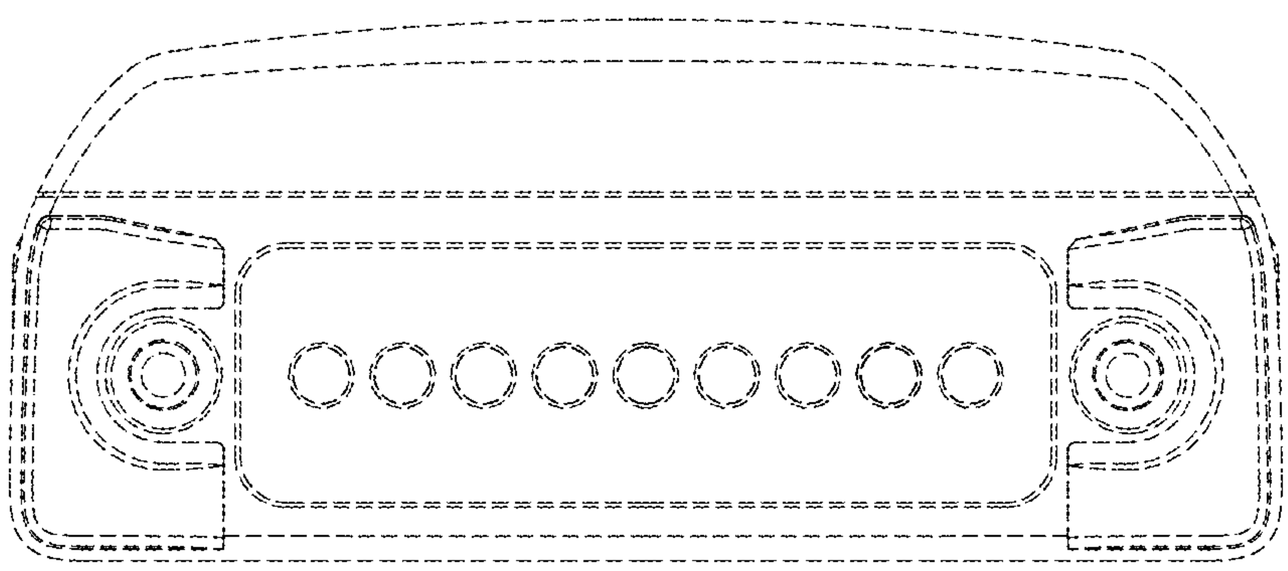

FIG. 8