US00D918819S

(12) United States Design Patent

Shetty et al.

(10) Patent No.: US D918,819 S
(45) Date of Patent: ** May 11, 2021

(54) **TANK**

(71) Applicant: **CATERPILLAR INC.**, Deerfield, IL (US)

(72) Inventors: **Ashay Shetty**, Peoria, IL (US); **Ramoji Ravuri**, Dunlap, IL (US)

(73) Assignee: **Caterpillar Inc.**, Peoria, IL (US)

(**) Term: **15 Years**

(21) Appl. No.: **29/700,332**

(22) Filed: **Aug. 1, 2019**

(51) **LOC (13) Cl.** **12-06**

(52) **U.S. Cl.**
USPC **D12/218**

(58) **Field of Classification Search**
USPC D12/110, 197, 218, 223; D9/435–454
CPC B60K 15/03; B60K 15/07; B62J 35/00; B62K 11/00; B62K 11/04
See application file for complete search history.

(56) **References Cited**

U.S. PATENT DOCUMENTS

D372,454	S	*	8/1996	Murray, Sr.	D12/218
D590,325	S	*	4/2009	Hall	D12/218
D643,796	S	*	8/2011	Heinemann	D12/218
D694,167	S	*	11/2013	Forsberg	D12/218
D751,023	S	*	3/2016	Hennen	D12/218
D766,810	S	*	9/2016	Haun	D12/414.1
D772,773	S	*	11/2016	Andersen	D12/218
D785,778	S	*	5/2017	Gibb	D23/499
D803,756	S	*	11/2017	Andersen	D12/218
D812,542	S	*	3/2018	LaPant	D12/218
D825,714	S	*	8/2018	Buckelew	D23/202
D837,720	S	*	1/2019	Schwalbe	D12/218
D837,835	S	*	1/2019	Schwalbe	D15/28
D849,662	S	*	5/2019	Rike	D12/223
D857,754	S	*	8/2019	Cam	D15/21
D887,946	S	*	6/2020	Prater	D12/218
D890,674	S	*	7/2020	Tafe	D12/218
D895,689	S	*	9/2020	Holst	D15/28
D901,547	S	*	11/2020	Gade	D15/28
2004/0080248	A1	*	4/2004	Klusmeier	B60R 9/00 312/348.3
2017/0101003	A1	*	4/2017	Zimmerman	F16F 15/04
2017/0334288	A1	*	11/2017	Rike	B60K 15/03006

* cited by examiner

Primary Examiner — Darlington Ly
(74) *Attorney, Agent, or Firm* — Finnegan, Henderson, Farabow, Garrett & Dunner, LLP

(57) **CLAIM**

The ornamental design for a tank, as shown and described.

DESCRIPTION

FIG. **1** is a front, left, top perspective view of a tank showing our new design;
FIG. **2** is a cross-sectional view as indicated in FIG. **1**;
FIG. **3** is a rear, right, bottom perspective view thereof;
FIG. **4** is an enlarged front, right, bottom perspective view thereof;
FIG. **5** is a front elevation view thereof;
FIG. **6** is a rear elevation view thereof;
FIG. **7** is a right side view thereof;
FIG. **8** is a left side view thereof;
FIG. **9** is a cross-sectional view as indicated in FIG. **5**;
FIG. **10** is a top plan view thereof;
FIG. **11** is a bottom plan view thereof;
FIG. **12** is a cross-sectional view as indicated in FIG. **7**; and,
FIG. **13** is a cross-sectional view as indicated in FIG. **8**.
The broken lines of even length shown in FIGS. **1-13** illustrate portions of the tank that form no part of the claimed design.

1 Claim, 9 Drawing Sheets

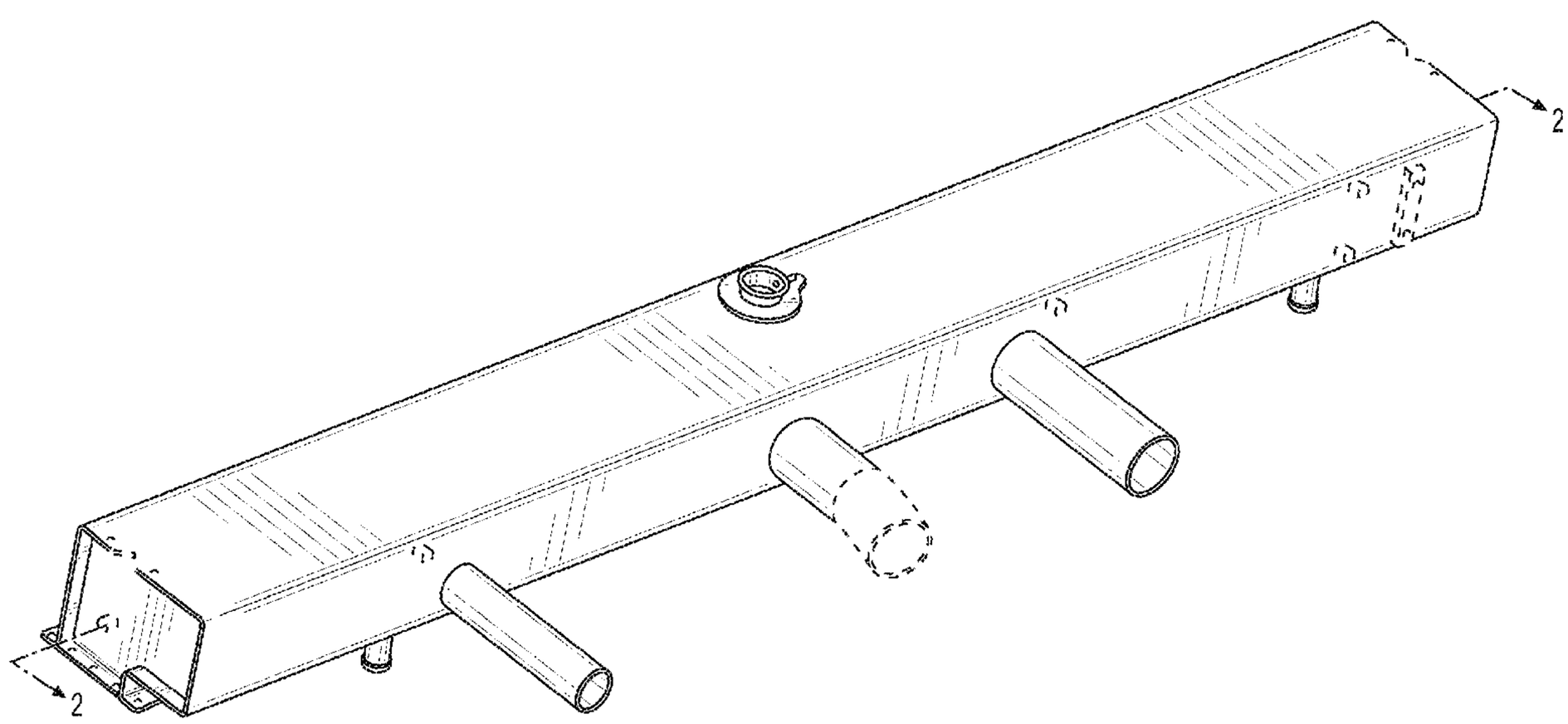

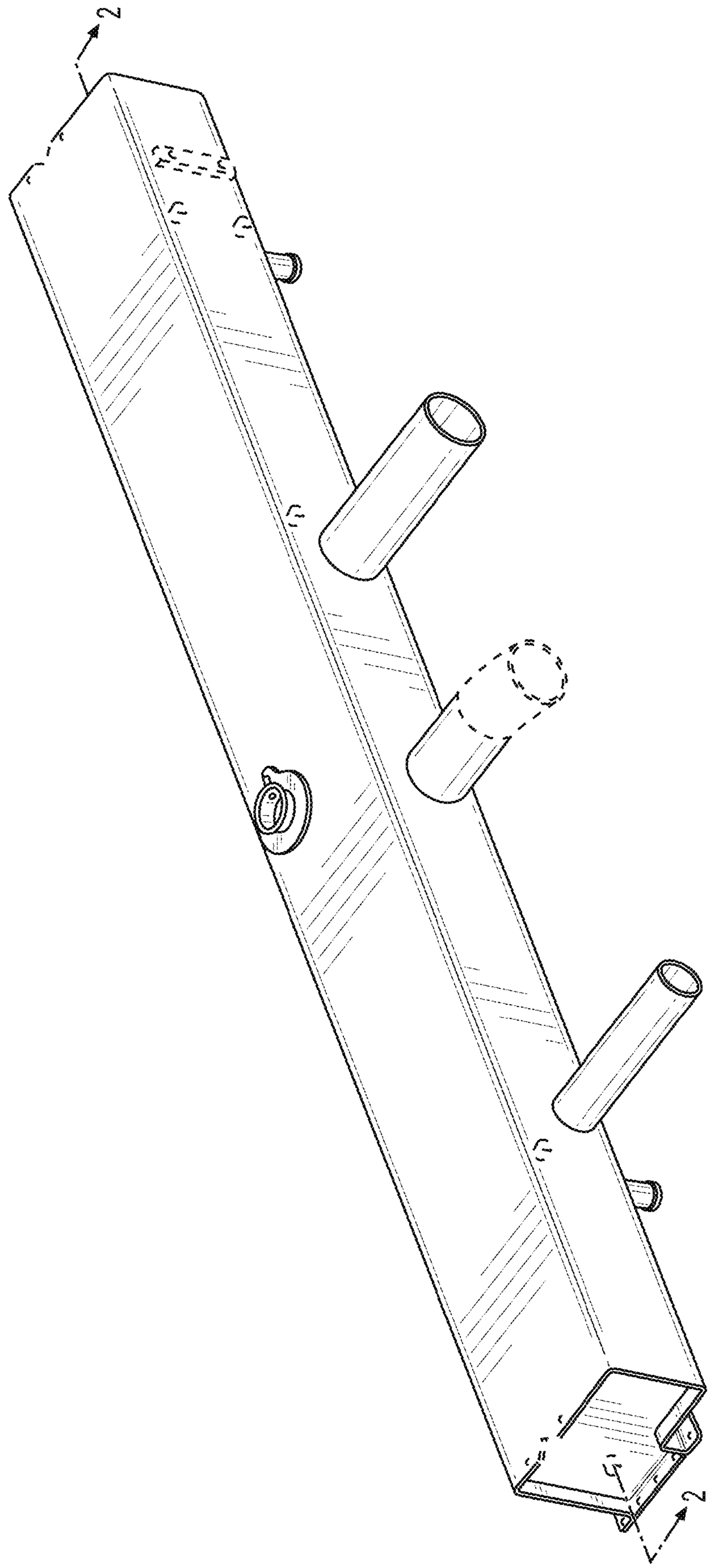

FIG. 1

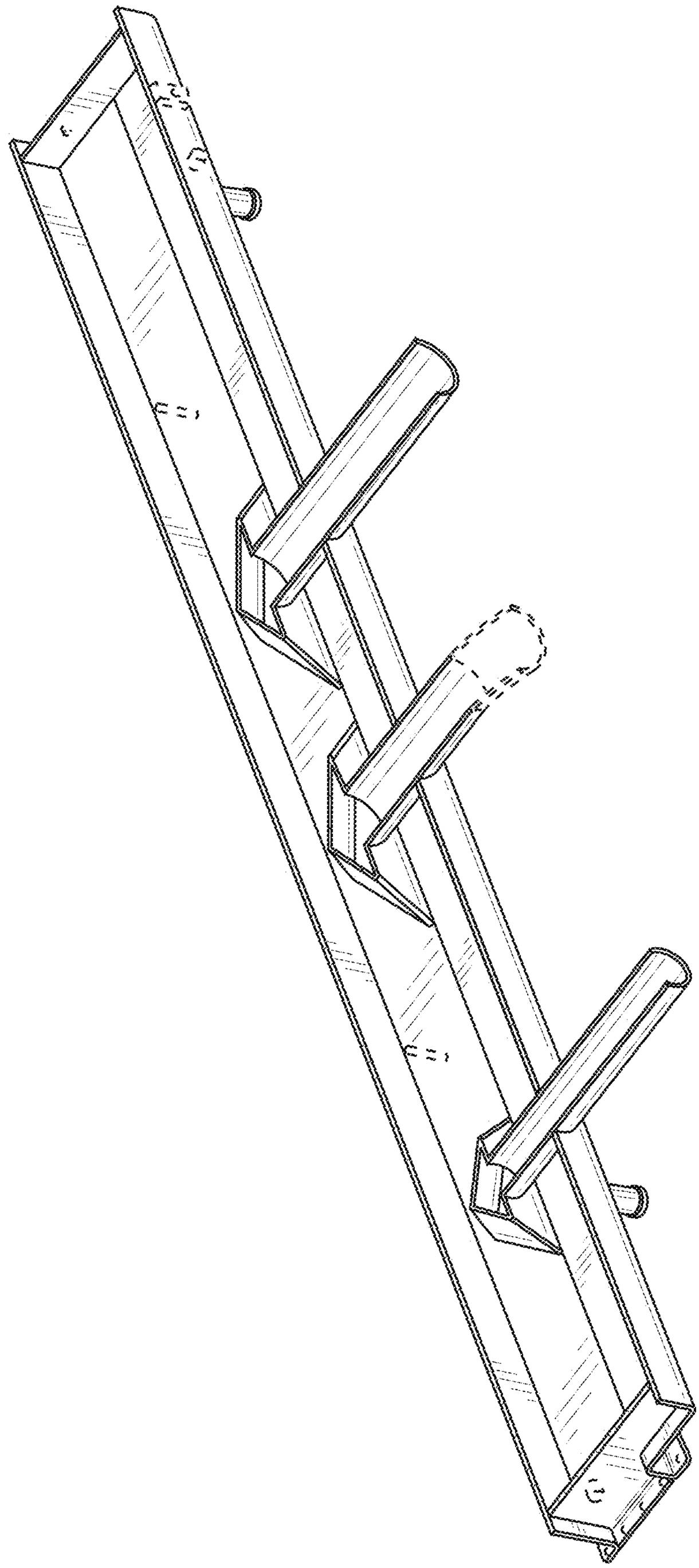

FIG. 2

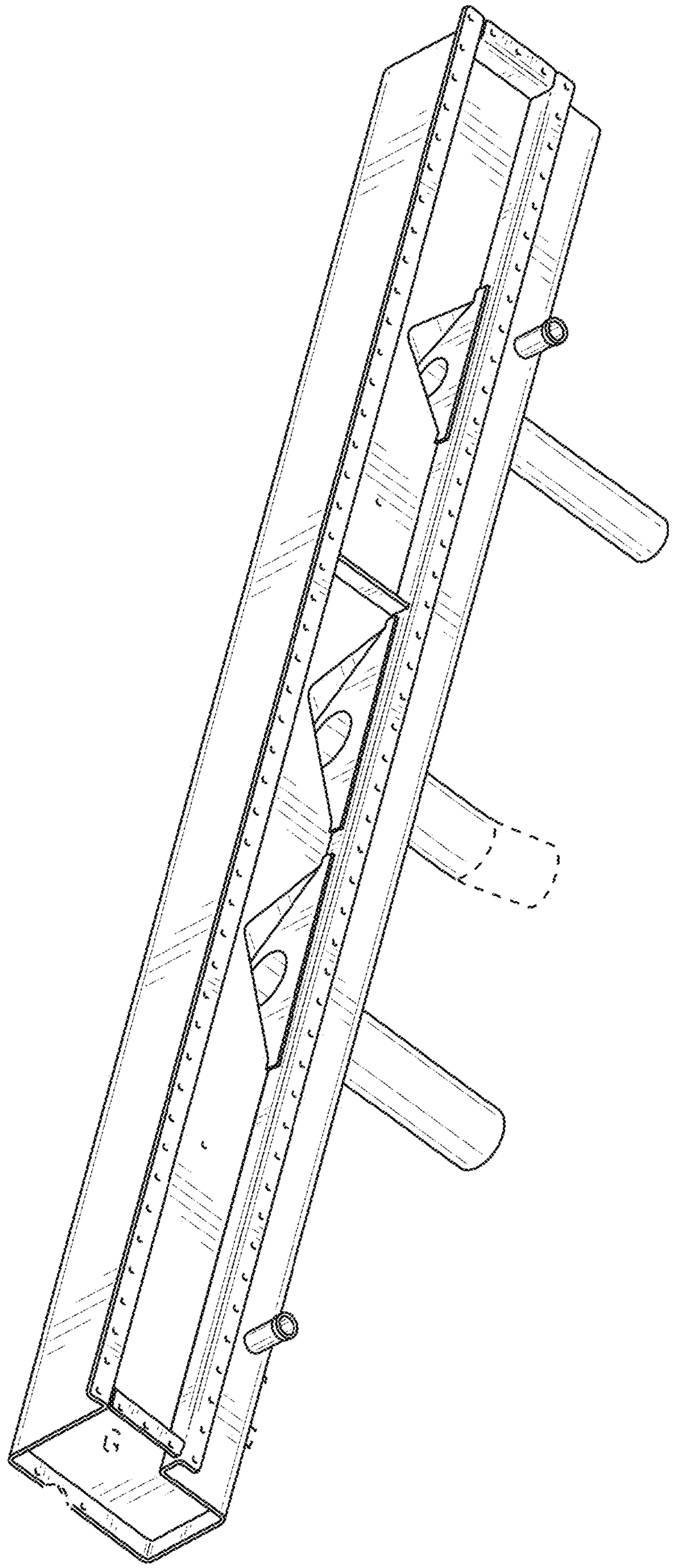

FIG. 3

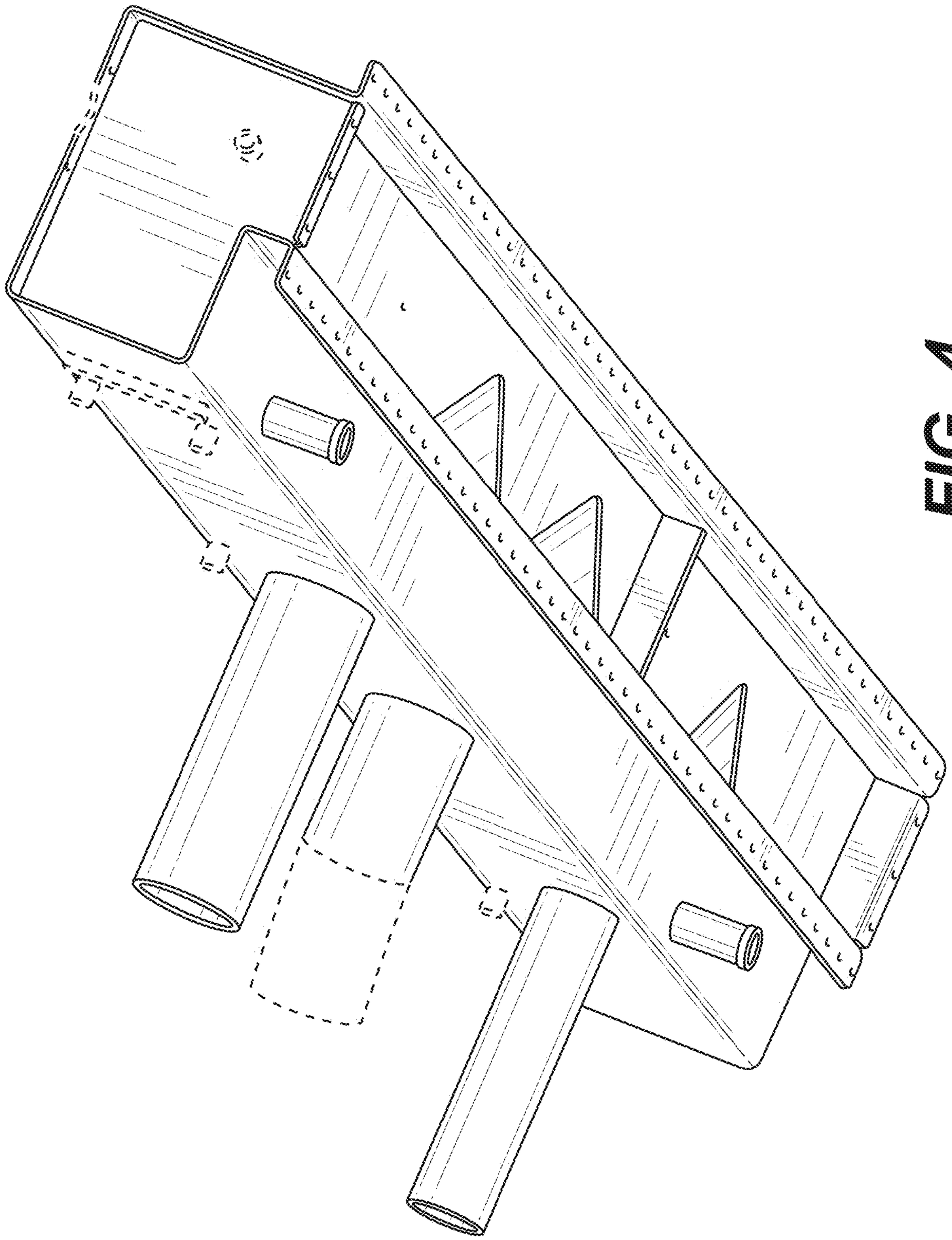

FIG. 4

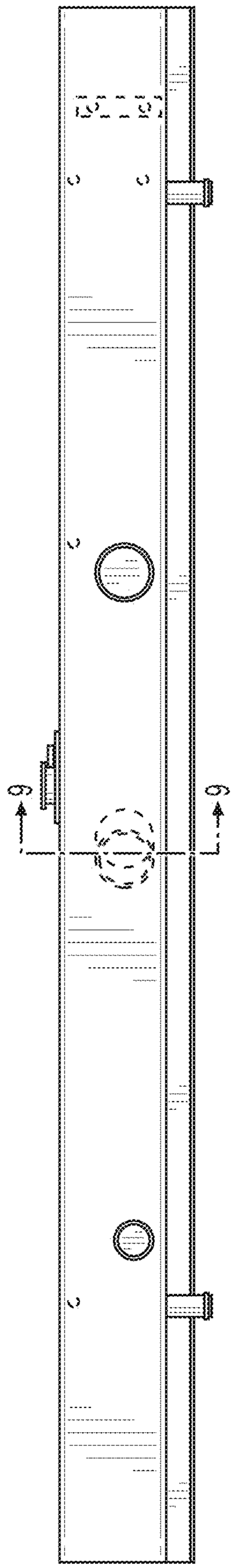

FIG. 5

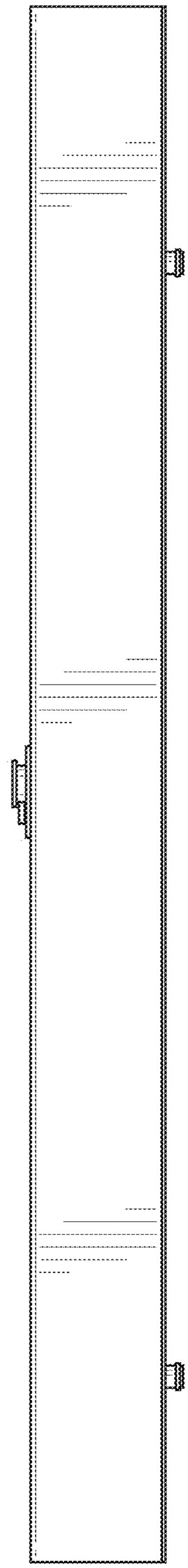

FIG. 6

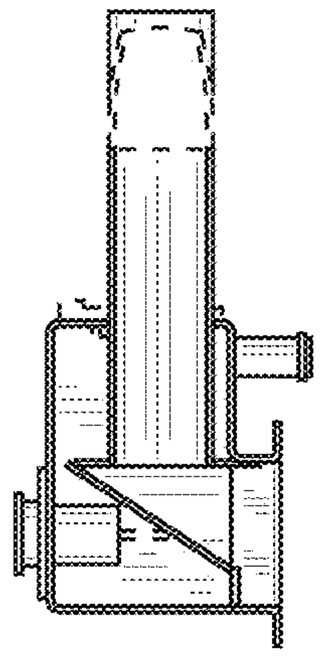

FIG. 9

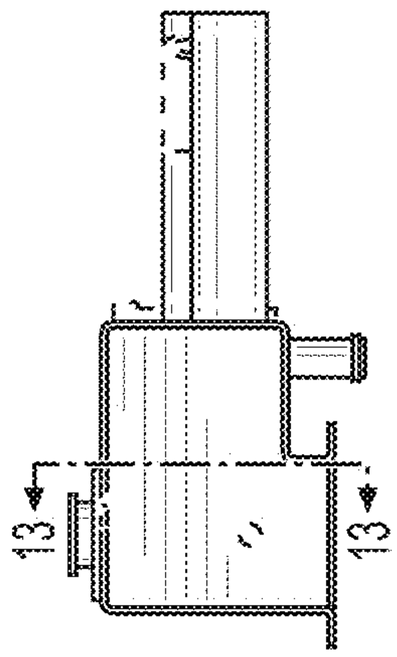

FIG. 8

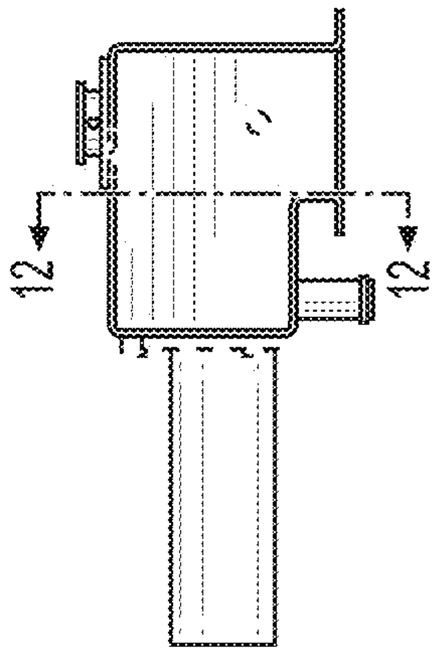

FIG. 7

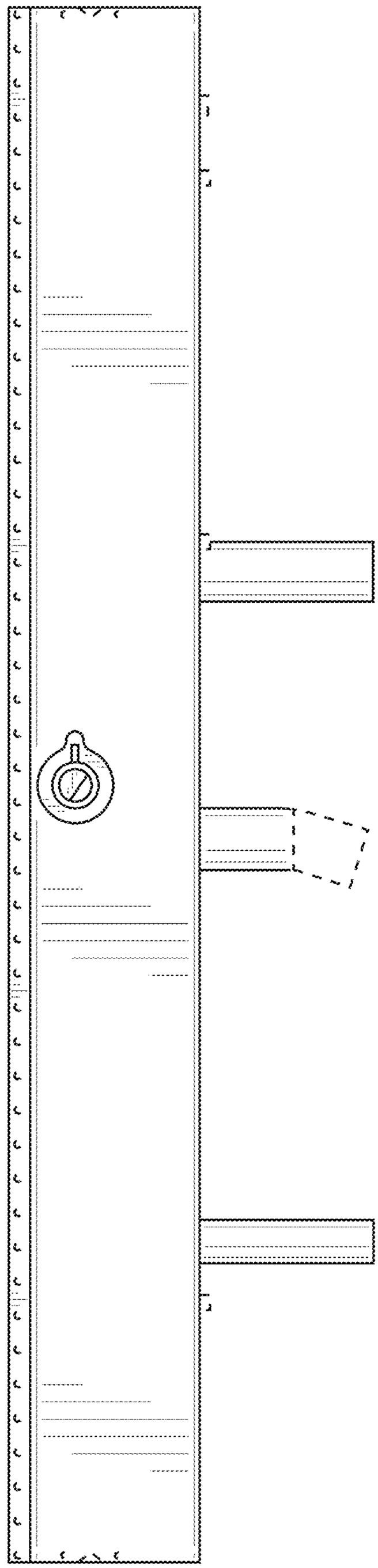

FIG. 10

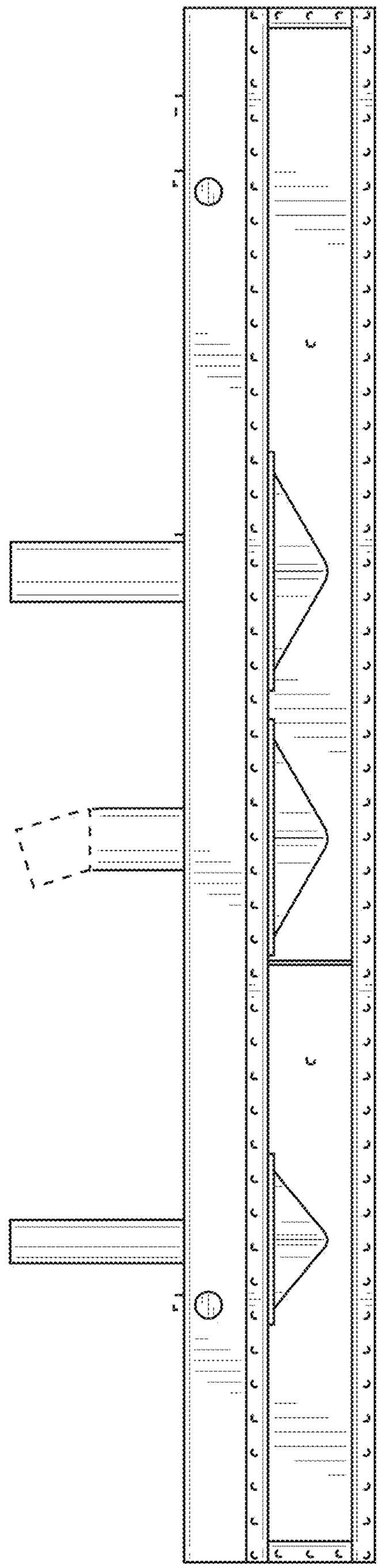

FIG. 11

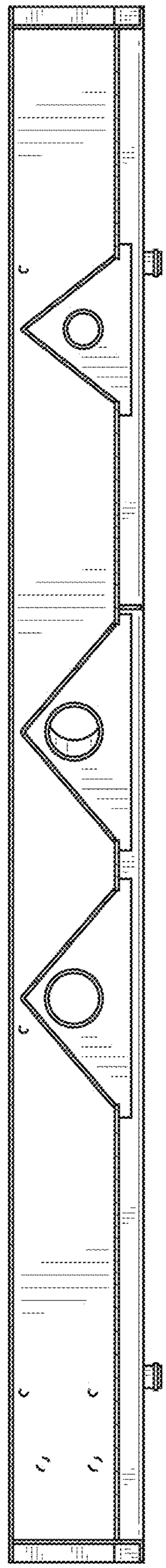

FIG. 12

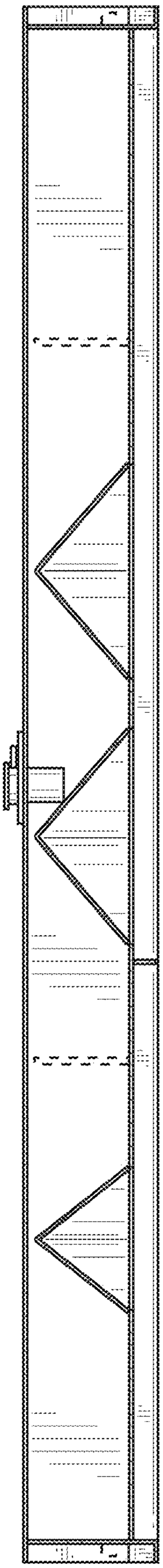

FIG. 13