US00D918070S

(12) United States Design Patent

Franco et al.

(10) Patent No.: US D918,070 S
(45) Date of Patent: ** May 4, 2021

(54) **WEARABLE SENSOR**

(71) Applicant: **TRIVA, INC.**, Fort Lauderdale, FL (US)

(72) Inventors: **George Franco**, Fort Lauderdale, FL (US); **Morgan Stewart**, Fort Lauderdale, FL (US)

(73) Assignee: **TRIVA, INC.**, Fort Lauderdale, FL (US)

(**) Term: **15 Years**

(21) Appl. No.: **29/685,889**

(22) Filed: **Apr. 1, 2019**

(51) **LOC (13) Cl.** **10-04**

(52) **U.S. Cl.**
USPC **D10/70**; D10/74

(58) **Field of Classification Search**
USPC ..... D10/46, 30–39, 65, 70, 74, 78, 80, 97, D10/98; D14/138 R, 138 G, 203.5, 203.6, D14/203.7, 341, 347
CPC A41D 1/02; A44C 5/0015; A44C 5/02; A44C 5/14; A61B 19/44; A61B 2019/446; A61B 71/00; A61B 5/02416; A61B 5/1118; A61B 2/721; A61B 5/002; A61B 5/112; A61B 5/1122; A61B 5/746; A61B 5/6823; A61B 5/72; A61B 5/7445; A61B 5/0022; A61B 5/14532; A63B 71/06; A63B 26/00; A63B 24/0075; A63B 71/0686; A63B 24/0062; A63B 24/0084; A63B 2024/0068; A63B 2024/0078; A63B 2024/0056; A63B 2071/0625; A63B 2071/003; A63B 2071/063; A63B 2071/065; A63B 2071/0663; A63B 2071/068; A63B 2071/0675; A63B 2220/40; A63B 2220/803; A63B 2220/12; A63B 2220/20; A63B 2220/22; A63B 2220/30; A63B 2225/50; A63B 2225/02; A63B 2225/06; A63B 2230/75; A63B 2024/0065; A63B 2024/0081; A63B 2220/51; A63B 2220/62; A63B 2220/836; G09F 3/005; G06F 1/163; G06F 3/038; G06F 3/03547; G04G 17/00; G04G 17/08; G04G 17/04; G04G 21/02; G04G 21/00; G04G 21/08; G04B 37/1486; G06Q 10/00; G06Q 50/00; G09B 9/00; G09B 19/00; G04F 10/00
See application file for complete search history.

(56) **References Cited**

U.S. PATENT DOCUMENTS

7,804,412 B2 * 9/2010 Derrick G08B 21/0283 340/573.1
10,460,583 B1 * 10/2019 Brantner G08B 21/0294

* cited by examiner

Primary Examiner — Antoine Duval Davis
(74) *Attorney, Agent, or Firm* — Lott & Fischer, PL

(57) **CLAIM**

The ornamental design for a wearable sensor, substantially as shown and described.

DESCRIPTION

FIG. **1** is a top perspective view of our new design;
FIG. **2** is a bottom perspective view of the design of FIG. **1**;
FIG. **3** is a rear elevational view of the design of FIG. **1**;
FIG. **4** is a front elevational view of the design of FIG. **1**;
FIG. **5** is a right side elevational view of the design of FIG. **1**;
FIG. **6** is a left side elevational view of the design of FIG. **1**;
FIG. **7** is a top plan view of the design of FIG. **1**; and,
FIG. **8** is a bottom plan view of the design of FIG. **1**.

1 Claim, 8 Drawing Sheets

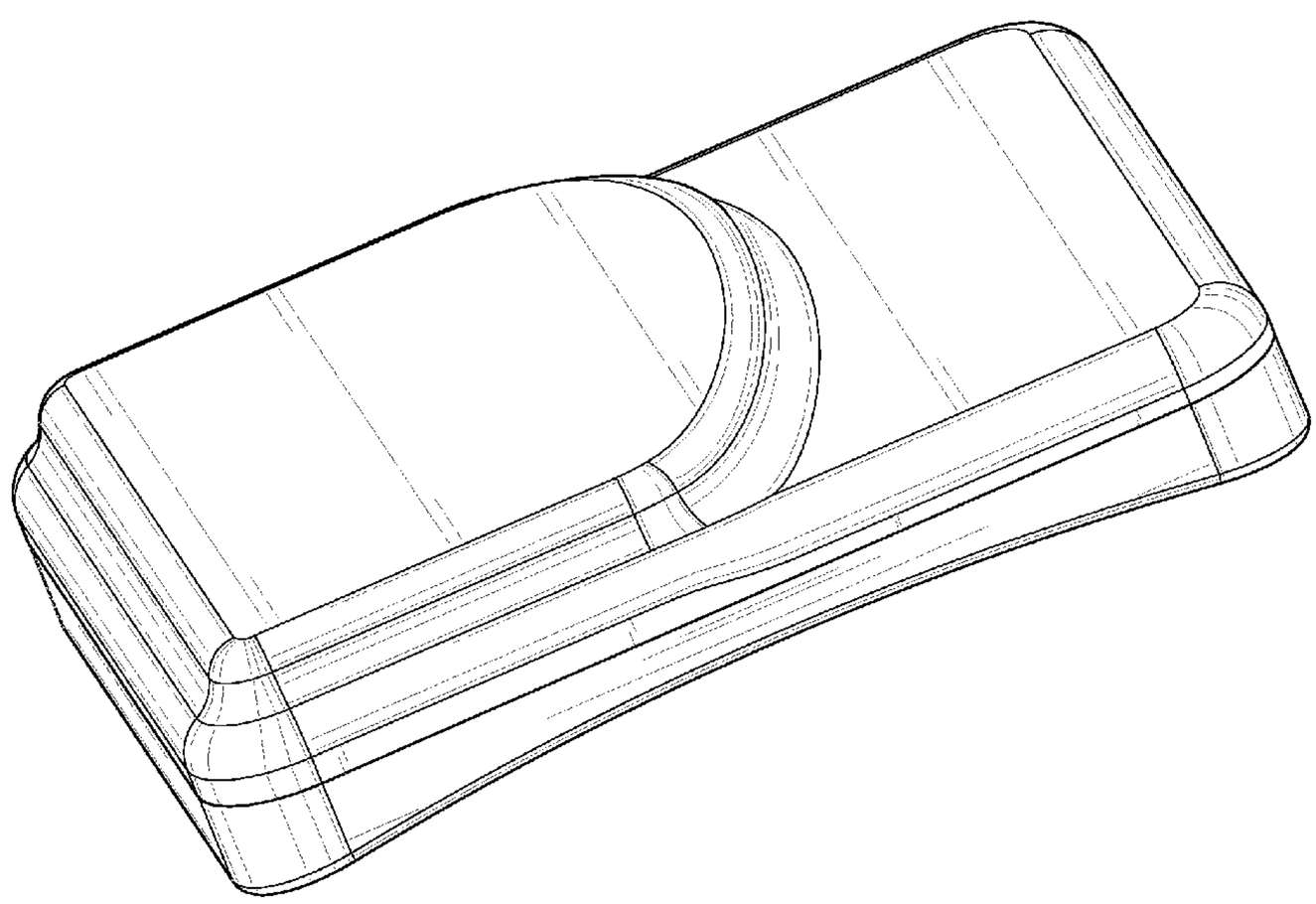

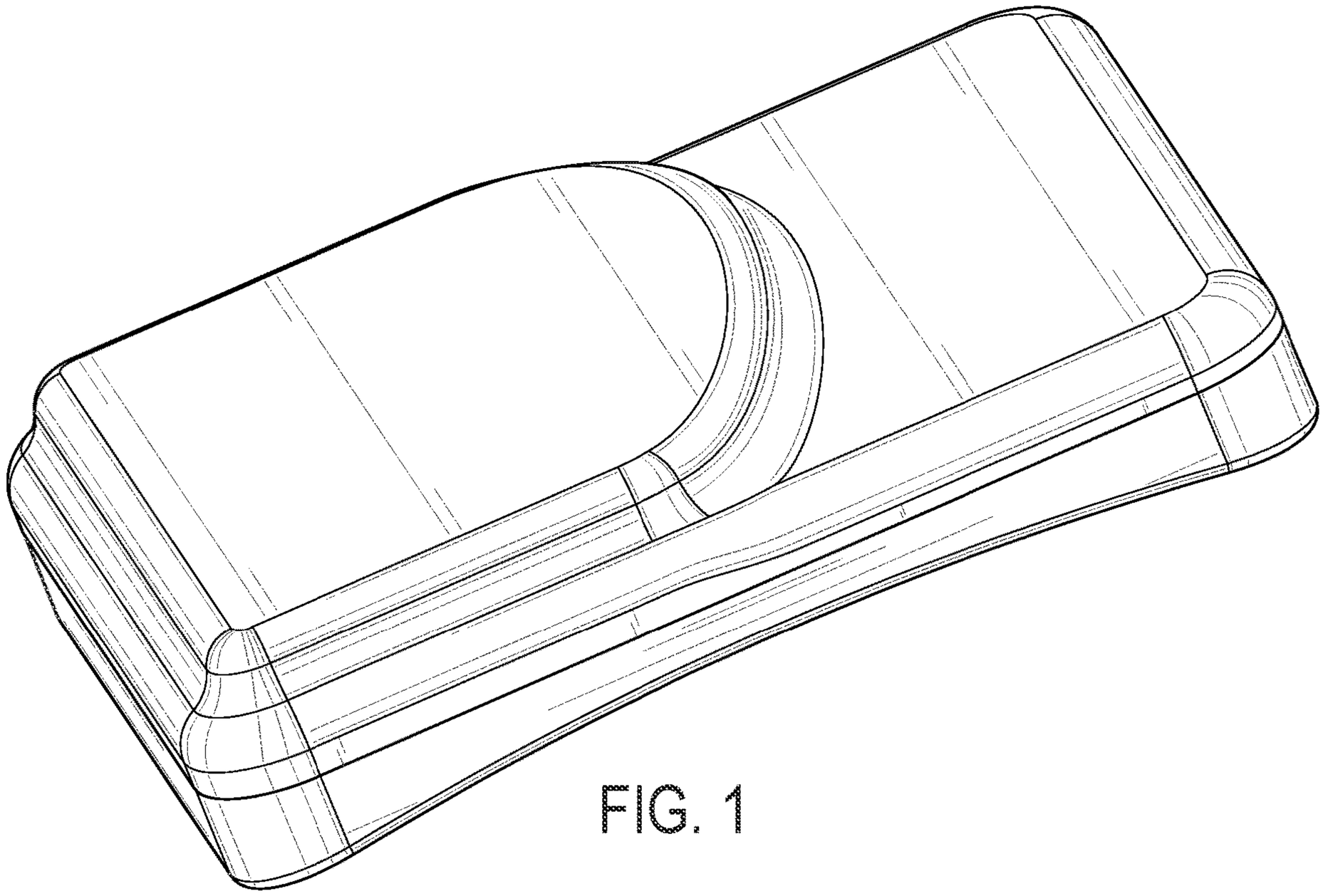

FIG. 1

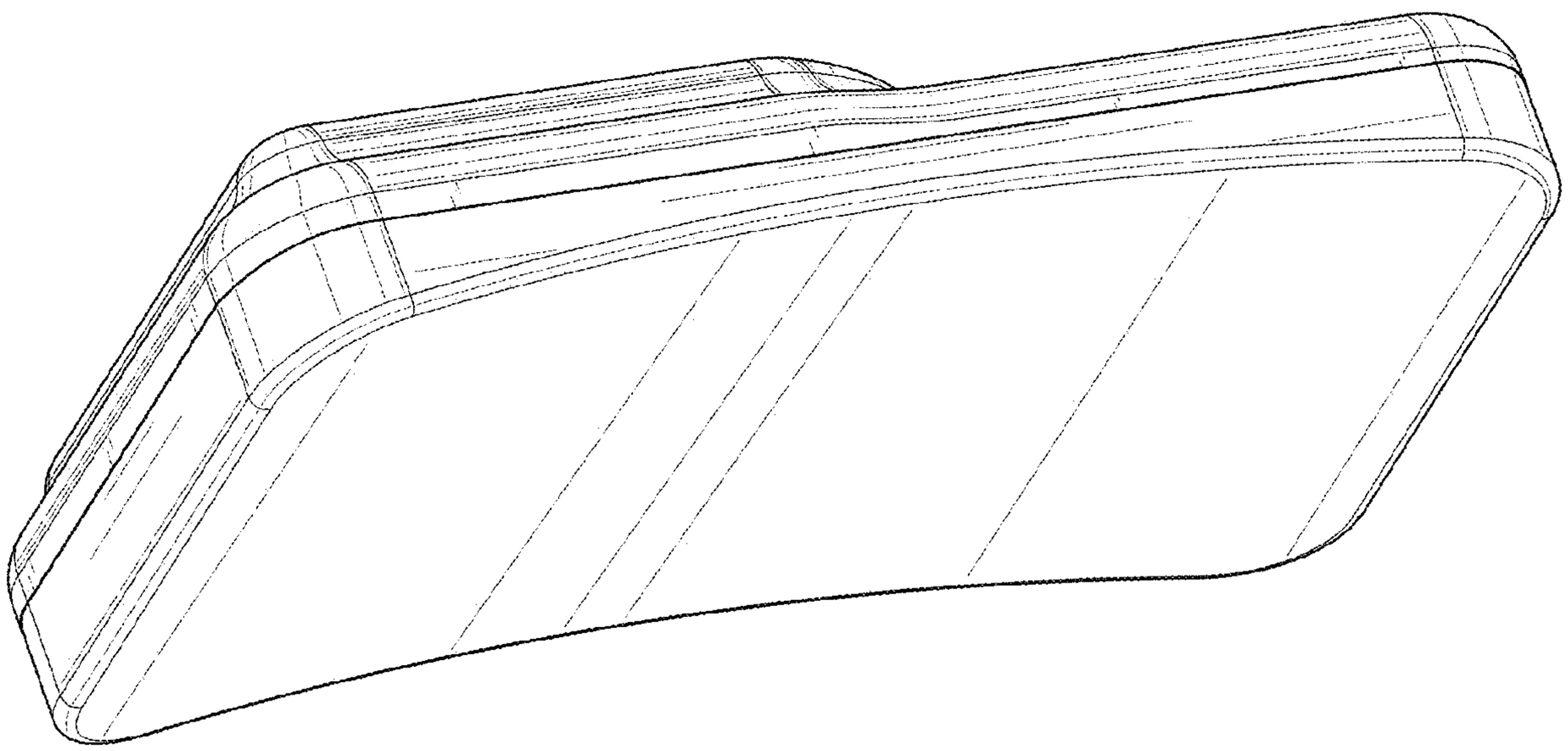

FIG. 2

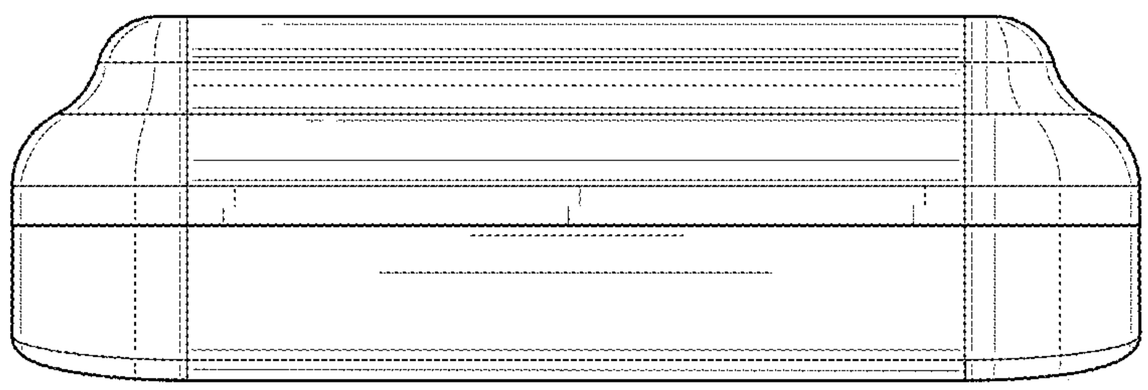

FIG. 3

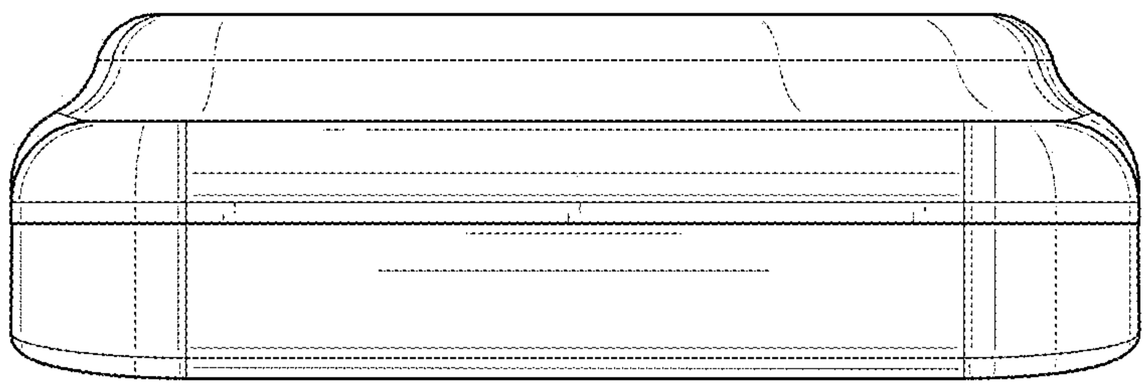

FIG. 4

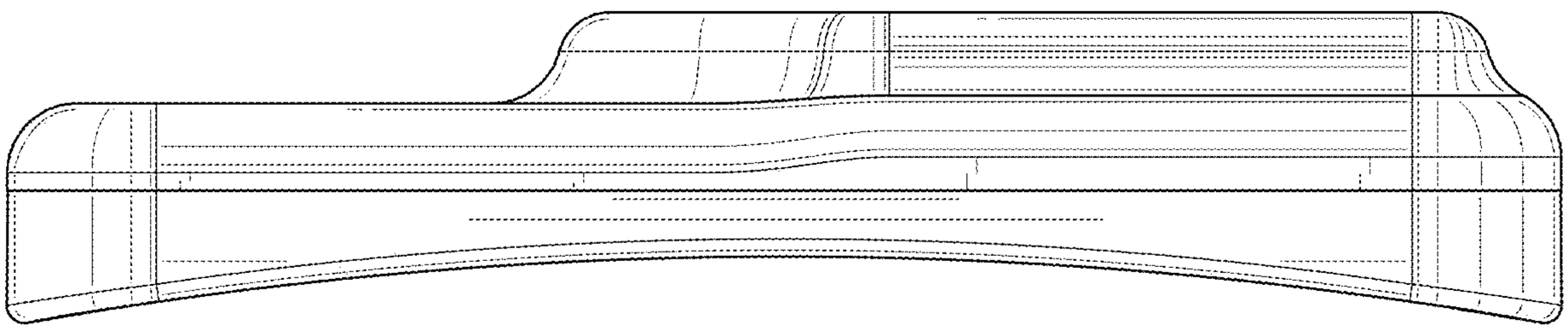

FIG. 5

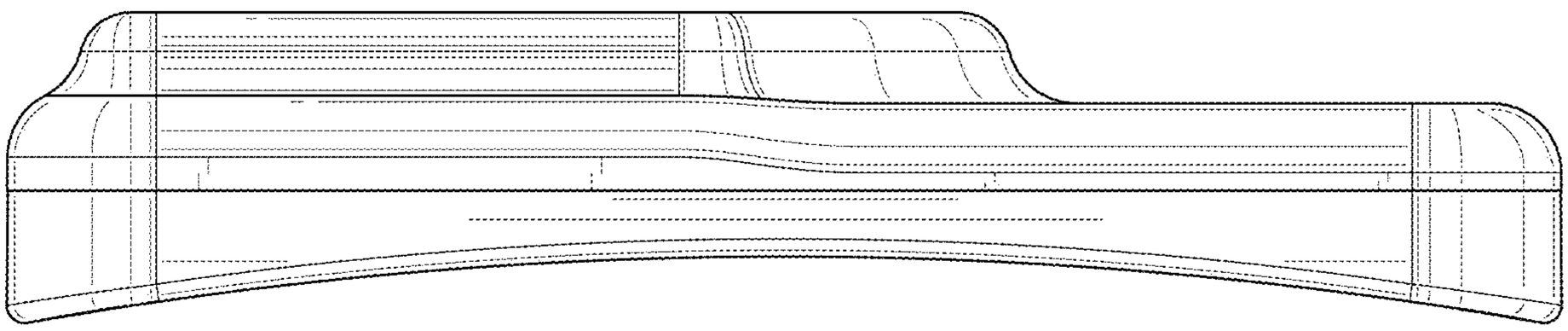

FIG. 6

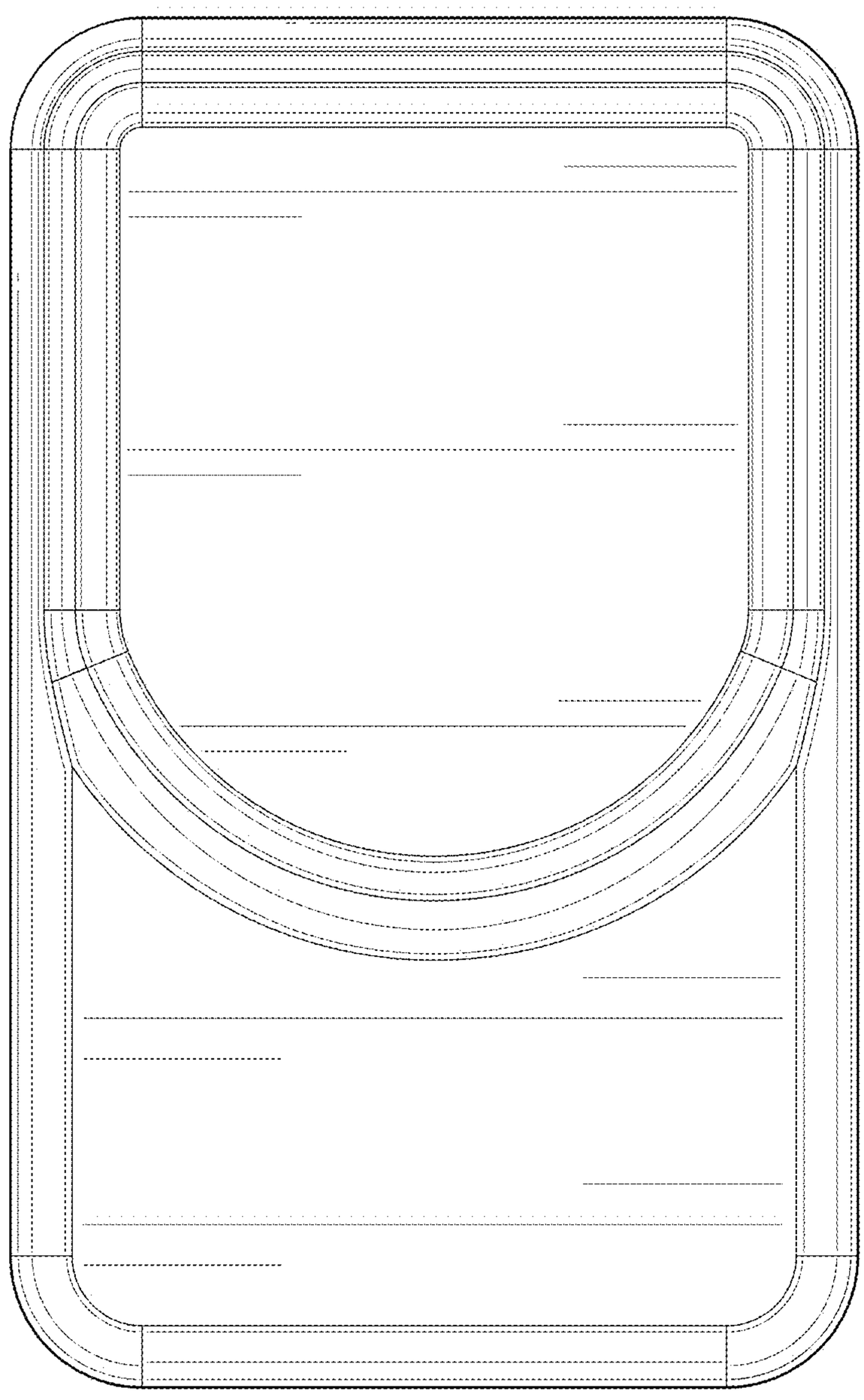

FIG. 7

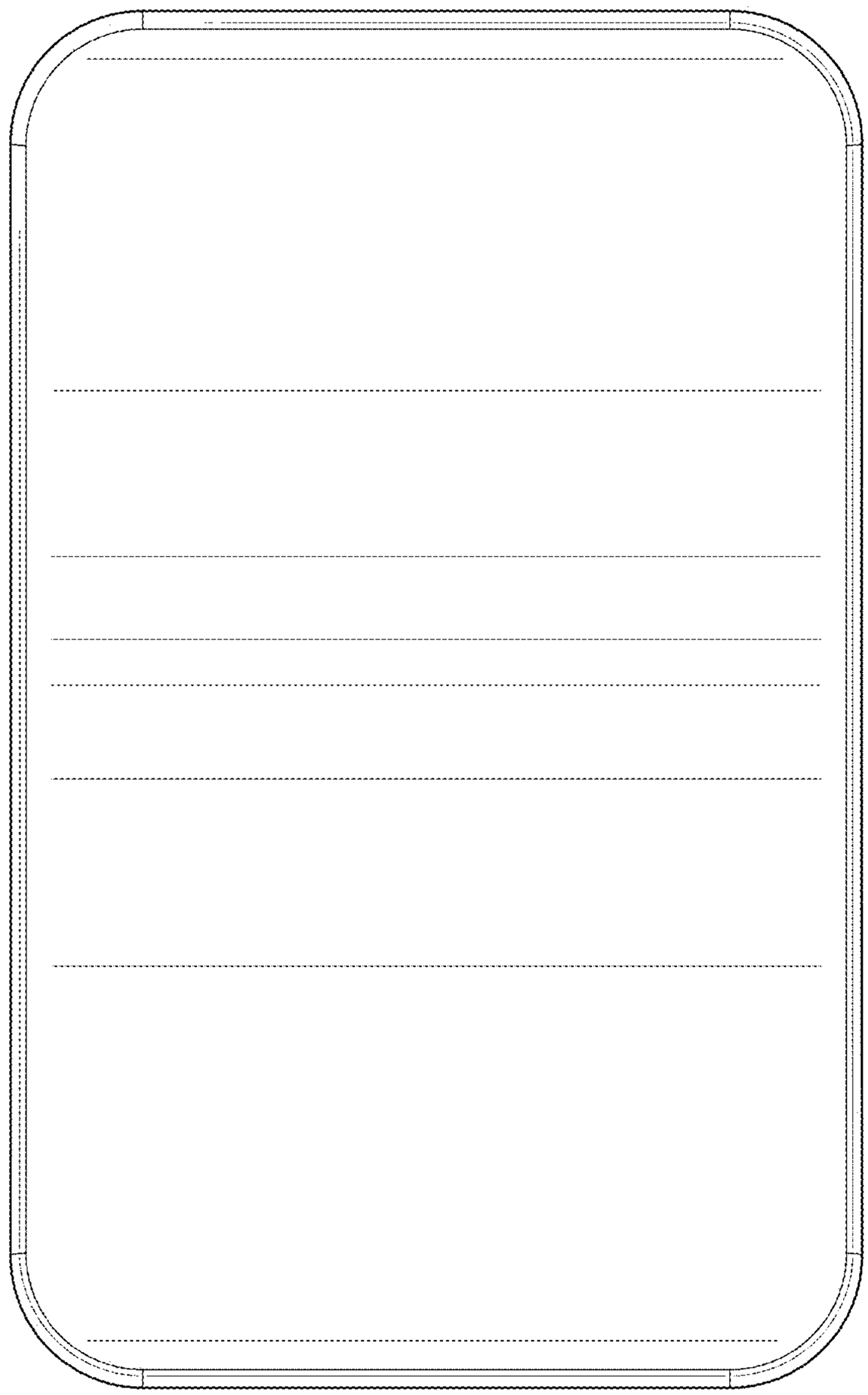

FIG. 8