US00D916681S

(12) United States Design Patent

He

(10) Patent No.: US D916,681 S
(45) Date of Patent: ** Apr. 20, 2021

(54) **HEADSET**

(71) Applicant: **Liu He**, Guangzhou (CN)

(72) Inventor: **Liu He**, Guangzhou (CN)

(**) Term: **15 Years**

(21) Appl. No.: **29/745,473**

(22) Filed: **Aug. 6, 2020**

(51) **LOC (13) Cl.** **14-01**

(52) **U.S. Cl.**
USPC **D14/205**; D14/206

(58) **Field of Classification Search**
USPC D14/205, 206, 372; D29/112; 2/209; 381/380, 381, 375; 455/90.3, 575.1, 455/569.1
CPC H04R 25/00; H04R 25/02; H04R 1/1066; H04R 1/1016; H04R 5/033; H04R 5/0335; H04R 1/10; G02B 27/01; G02B 27/017
See application file for complete search history.

(56) **References Cited**

U.S. PATENT DOCUMENTS

3,661,225 A * 5/1972 Anderson A61F 11/14 181/175
D239,787 S * 5/1976 Lonnstedt D29/112
D244,037 S * 4/1977 Warner D14/205
4,302,635 A * 11/1981 Jacobsen H04R 1/1058 381/371
D276,855 S * 12/1984 Falco D29/112
D292,205 S * 10/1987 Kikutani 381/378
D313,092 S * 12/1990 Nilsson D14/205
5,068,923 A * 12/1991 Sjoqvist A61F 11/14 2/209
D337,115 S * 7/1993 Yamazaki D14/205
D345,162 S * 3/1994 Yamatogi D14/205
D351,172 S * 10/1994 Nakamura D14/205
5,996,123 A * 12/1999 Leight A61F 11/14 2/209
D442,340 S * 5/2001 Leight D29/112
D457,874 S * 5/2002 Yoneda D14/205
6,385,325 B1 * 5/2002 Nageno H04R 1/1066 381/370
D465,616 S * 11/2002 Nilsson A61F 11/14 D29/112
6,902,029 B2 * 6/2005 Weise A42B 3/166 128/867
7,072,483 B2 * 7/2006 Lenhard-Backhaus H04R 1/1066 381/370
D544,650 S * 6/2007 Westerdal D29/112
D549,688 S * 8/2007 Suzuki D14/205
D585,879 S * 2/2009 Schulman D14/223
D593,995 S * 6/2009 Shimizu D14/205
D597,070 S * 7/2009 Zheng D14/205
D617,770 S * 6/2010 Sanguinetti D14/205
D625,703 S * 10/2010 Kolton D14/205
(Continued)

FOREIGN PATENT DOCUMENTS

EM 008168900-0001 * 9/2020

Primary Examiner — Paula Allen Greene
(74) *Attorney, Agent, or Firm* — Law Offices of Steven W. Weinrieb

(57) **CLAIM**

The ornamental design for a headset, as shown and described.

DESCRIPTION

FIG. **1** is a front, right side, top perspective view of a HEADSET showing my new design;
FIG. **2** is a front elevational view thereof;
FIG. **3** is a rear elevational view thereof;
FIG. **4** is a left side elevational view thereof;
FIG. **5** is a right side elevational view thereof;
FIG. **6** is a top plan view thereof; and,
FIG. **7** is a bottom plan view thereof.
The broken depict portions of the headset that form no part of the claimed design.

1 Claim, 7 Drawing Sheets

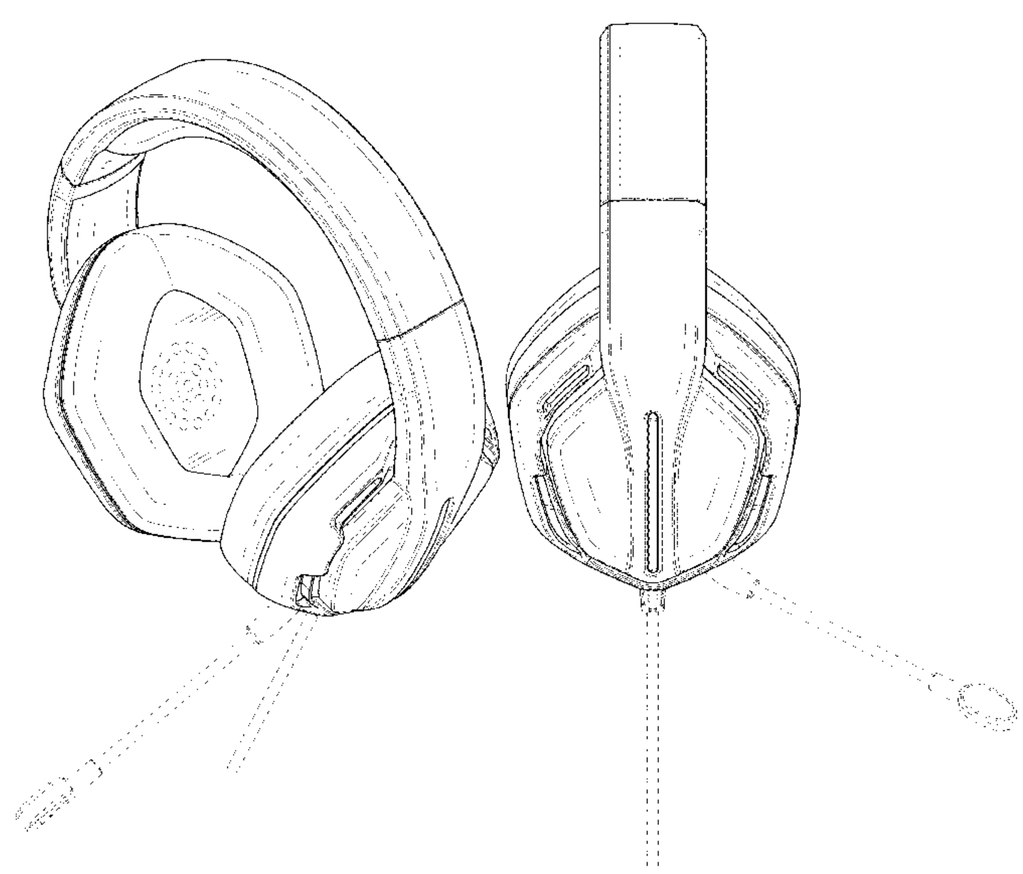

(56) **References Cited**

U.S. PATENT DOCUMENTS

D635,957 S * 4/2011 Hirano D14/205
D641,725 S * 7/2011 Chong D14/205
D657,344 S * 4/2012 Brunner D14/205
D657,346 S * 4/2012 Park D14/205
D662,912 S * 7/2012 Iijima D14/205
D663,716 S * 7/2012 Hardi D14/205
D673,136 S * 12/2012 Kelly D14/205
D673,522 S * 1/2013 Iijima D14/205
D676,024 S * 2/2013 Kelly D14/205
D699,702 S * 2/2014 Chen D14/205
D701,193 S * 3/2014 Kelly D14/205
D710,822 S * 8/2014 Gan H04R 1/1066 D14/205
D711,347 S * 8/2014 Gan H04R 1/1066 D14/205
D719,133 S * 12/2014 Gan D14/205
D719,134 S * 12/2014 Gan D14/205
D719,136 S * 12/2014 Schaal D14/206
D727,288 S * 4/2015 Yamasaki D14/205
D729,196 S * 5/2015 Liu D14/205
D735,419 S * 7/2015 Rose D29/112
D741,289 S * 10/2015 Schaal D14/205
D752,018 S * 3/2016 Gondo D14/205
D763,820 S * 8/2016 Mchatet D14/205
D807,584 S * 1/2018 Fletcher D29/112
D808,359 S * 1/2018 Meyer D14/205
D815,614 S * 4/2018 Tzeng D14/205
D832,813 S 11/2018 Levine et al.
D840,974 S * 2/2019 Ferren D14/205
D842,270 S 3/2019 Chen
D857,657 S * 8/2019 Skinner D14/206
D864,899 S 10/2019 He
D868,733 S 12/2019 Luo
D868,734 S * 12/2019 Wang D14/206
D872,050 S 1/2020 Liu
D876,388 S 2/2020 Carr et al.
D878,329 S 3/2020 Levine et al.
D879,066 S 3/2020 Chen
D881,157 S 4/2020 Chen
D881,840 S 4/2020 Chen
D885,683 S * 5/2020 Qiu D29/112
D888,008 S * 6/2020 Yook D14/205
D891,396 S 7/2020 Matthews
D894,867 S * 9/2020 Choe D14/205
D901,436 S * 11/2020 Peng D14/205
D904,339 S * 12/2020 Wang D14/205
2010/0310093 A1 * 12/2010 Semcken H04R 1/1058 381/104
2011/0206216 A1 * 8/2011 Brunner H04R 1/1066 381/74
2013/0340769 A1 * 12/2013 Roos A61F 11/14 128/866

* cited by examiner

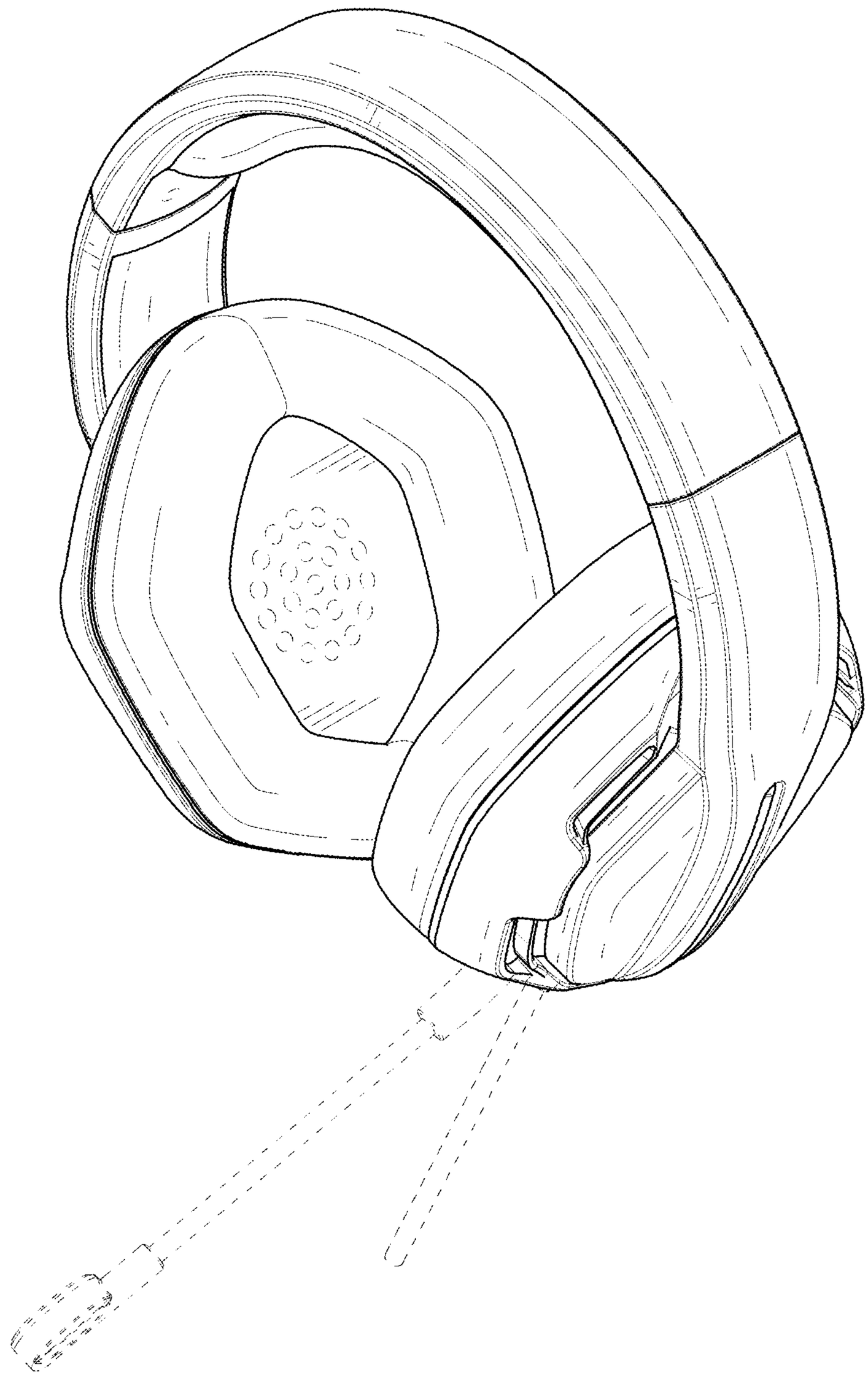

FIG.1

FIG.2

FIG.3

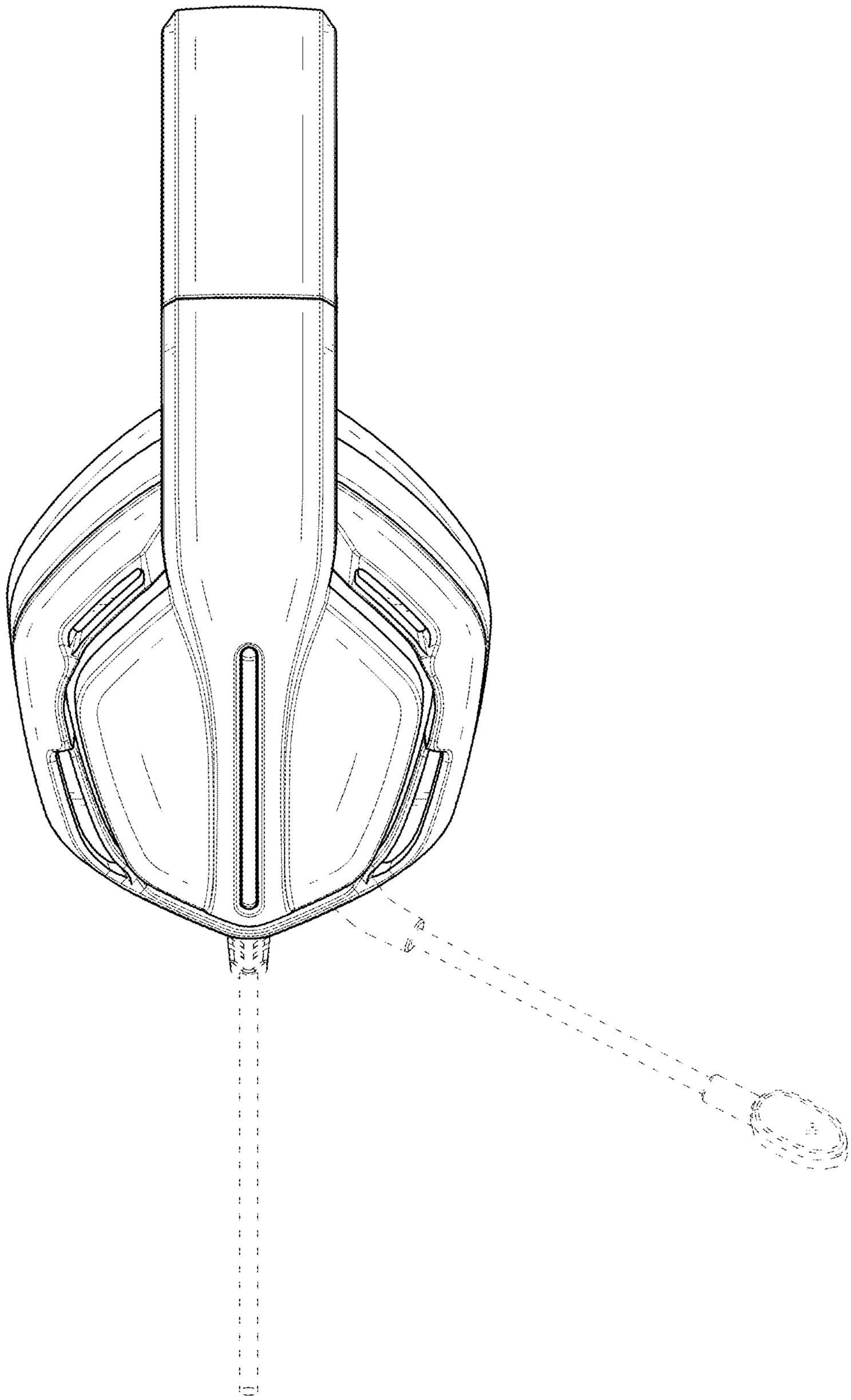

FIG.4

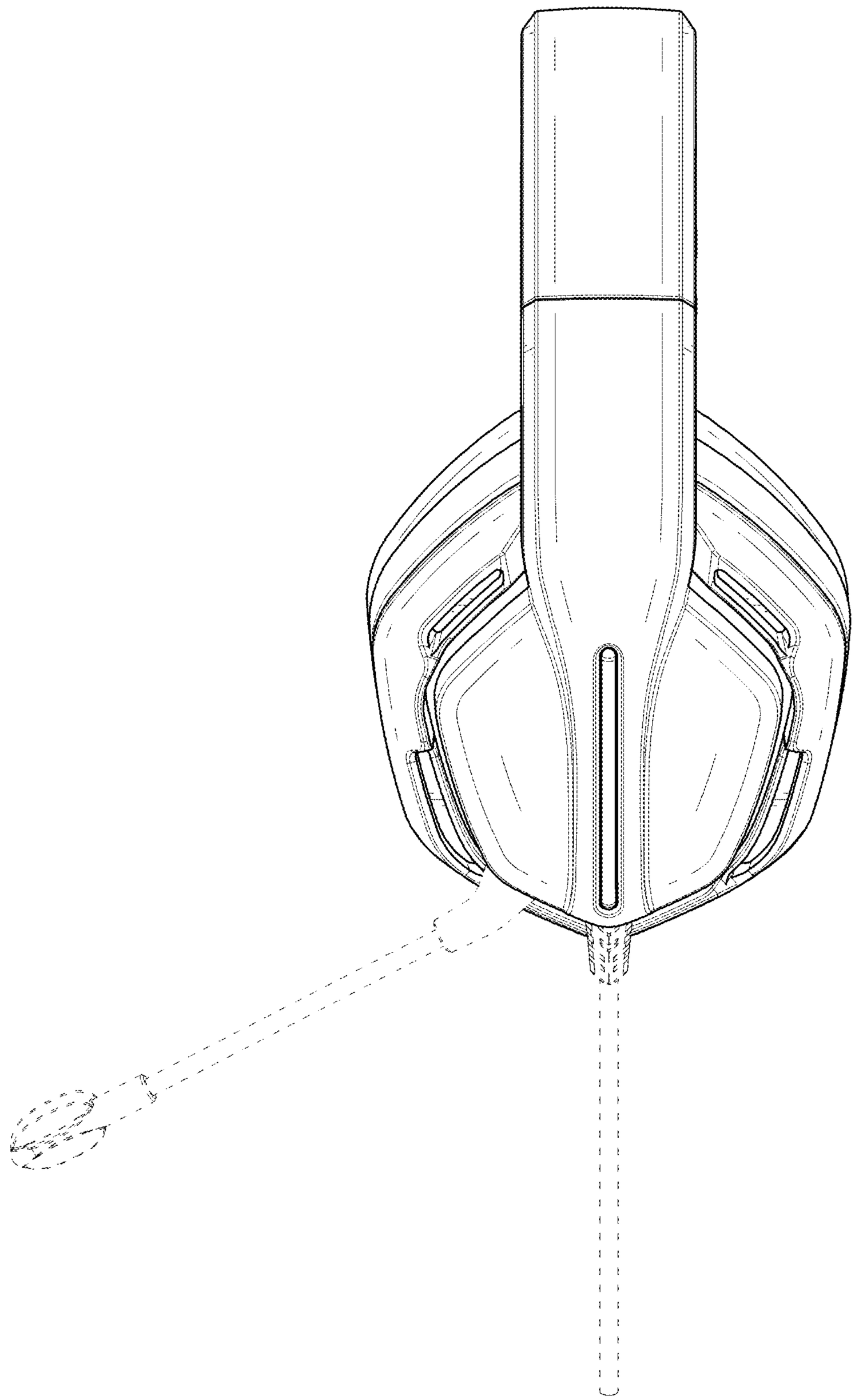

FIG.5

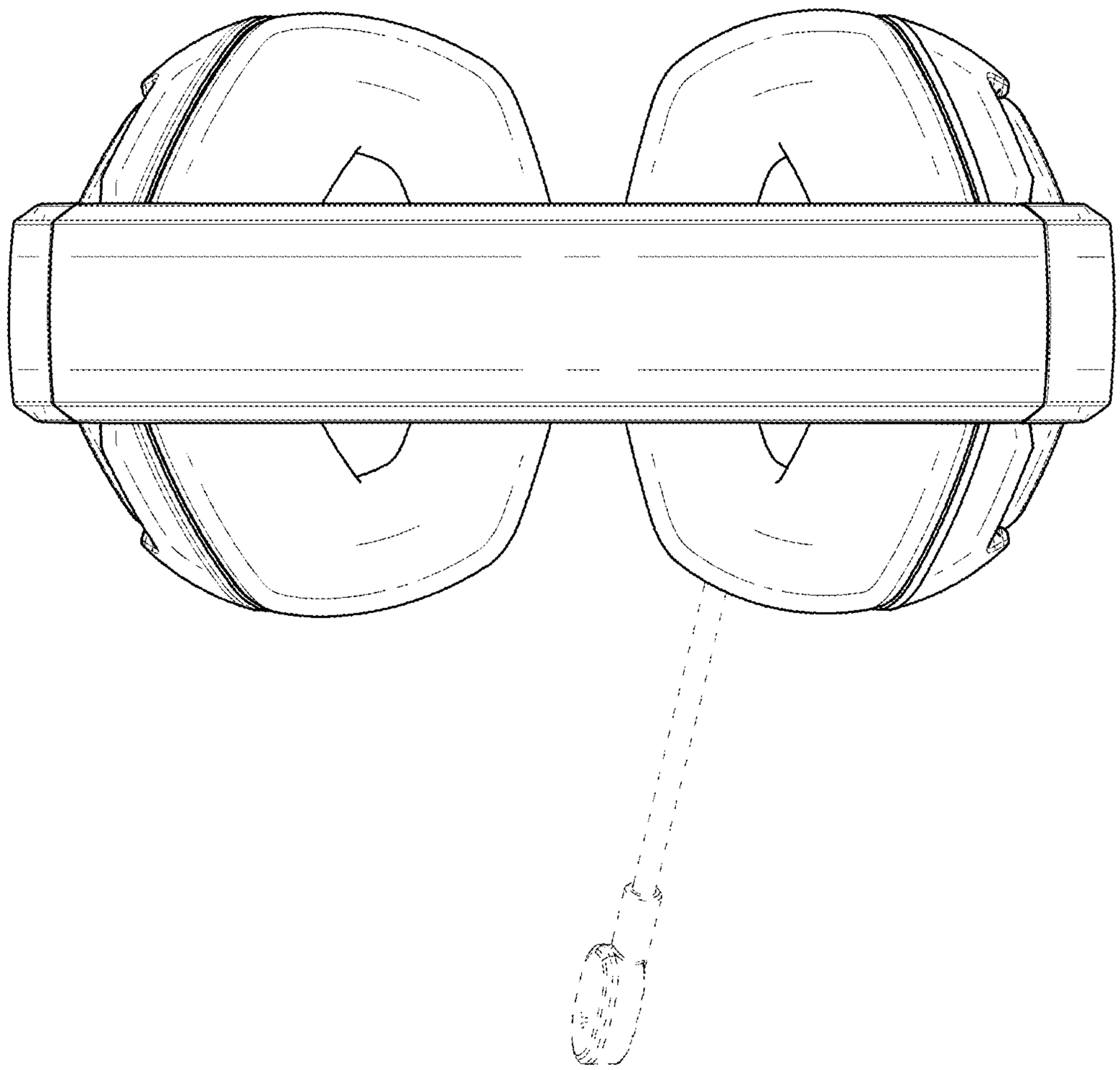

FIG.6

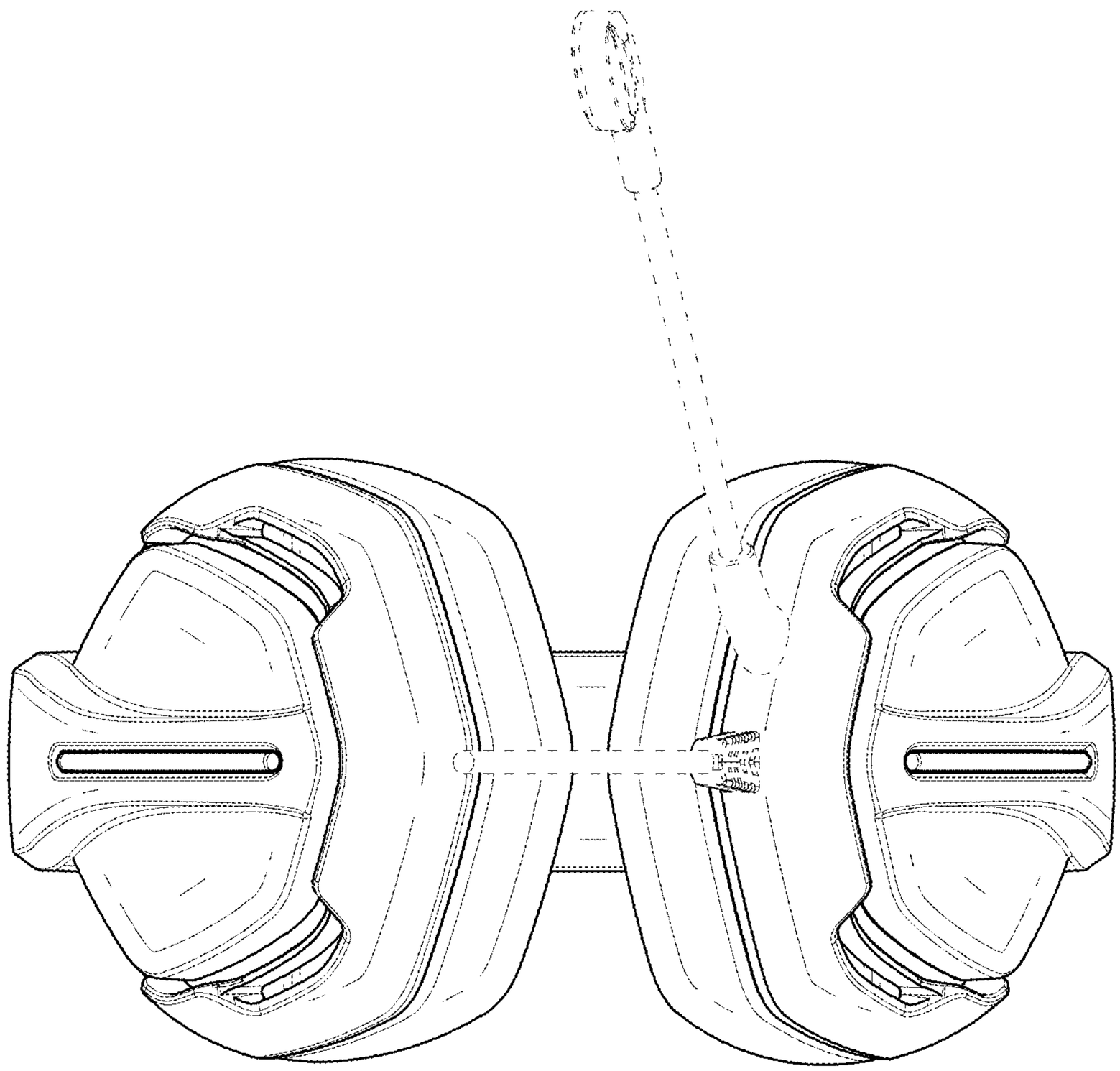

FIG.7