US00D916633S

(12) United States Design Patent

Kaneko et al.

(10) Patent No.: US D916,633 S
(45) Date of Patent: ** Apr. 20, 2021

(54) **MOTOR WITH CONTROLLER FOR POWER STEERING**

(71) Applicant: **NSK LTD.**, Tokyo (JP)

(72) Inventors: **Noboru Kaneko**, Tokyo (JP); **Yuri Shimizu**, Tokyo (JP)

(73) Assignee: **NSK LTD.**, Tokyo (JP)

(**) Term: **15 Years**

(21) Appl. No.: **29/667,835**

(22) Filed: **Oct. 25, 2018**

(30) **Foreign Application Priority Data**

Apr. 26, 2018 (JP) 2018-009329

(51) **LOC (13) Cl.** **12-16**

(52) **U.S. Cl.**
USPC **D12/177**

(58) **Field of Classification Search**
USPC D12/86, 163–164, 169, 173, 175, 177, D12/184, 196
CPC B62D 5/0406; B62D 5/0409; B62D 1/16; B62D 5/0412; B62D 1/189; H05K 1/141
See application file for complete search history.

(56) **References Cited**

U.S. PATENT DOCUMENTS

D47,898	S	*	9/1915	Scaife	D12/177
D49,038	S	*	5/1916	Scaife	D12/177
D589,858	S	*	4/2009	Nagase	D12/177
D599,263	S	*	9/2009	Nagase	D12/177
D602,411	S	*	10/2009	Nagase	D12/177
D772,125	S	*	11/2016	Huang	B62D 5/0406 D12/177
10,315,686	B2	*	6/2019	Wada	H02K 5/02
D853,913	S	*	7/2019	Sunaga	H02K 11/33 D12/177

(Continued)

FOREIGN PATENT DOCUMENTS

JP	D1391073	S	6/2010
JP	2015-054630	A	3/2015
JP	3213707	U	11/2017

OTHER PUBLICATIONS

Nexteer Automotive. "Column EPS with Modular Power Pack." YouTube, published Nov. 29, 2016 (Retrieved from the Internet Apr. 15, 2020). Internet URL: <https://www.youtube.com/watch?v=_WQk4J2uvhc&feature=emb_logo> (Year: 2016).*

(Continued)

Primary Examiner — Rachel A. Voorhies
(74) *Attorney, Agent, or Firm* — Sughrue Mion, PLLC

(57) **CLAIM**

The ornamental design for a motor with controller for power steering, as shown and described.

DESCRIPTION

FIG. **1** is a front, top and left-side perspective view of a motor with controller for power steering showing our new design;
FIG. **2** is rear, top and left-side perspective view thereof;
FIG. **3** is a front, bottom and right-side perspective view thereof;
FIG. **4** is a rear, bottom and left-side perspective view thereof;
FIG. **5** is a front elevational view thereof;
FIG. **6** is a rear elevational view thereof
FIG. **7** is a left-side elevational view thereof;
FIG. **8** is a right-side elevational view thereof;
FIG. **9** is a top plan view thereof; and,
FIG. **10** is a bottom plan view thereof.
The broken lines in the drawings illustrate portions of the motor with controller for power steering that form no part of the claimed design.

1 Claim, 7 Drawing Sheets

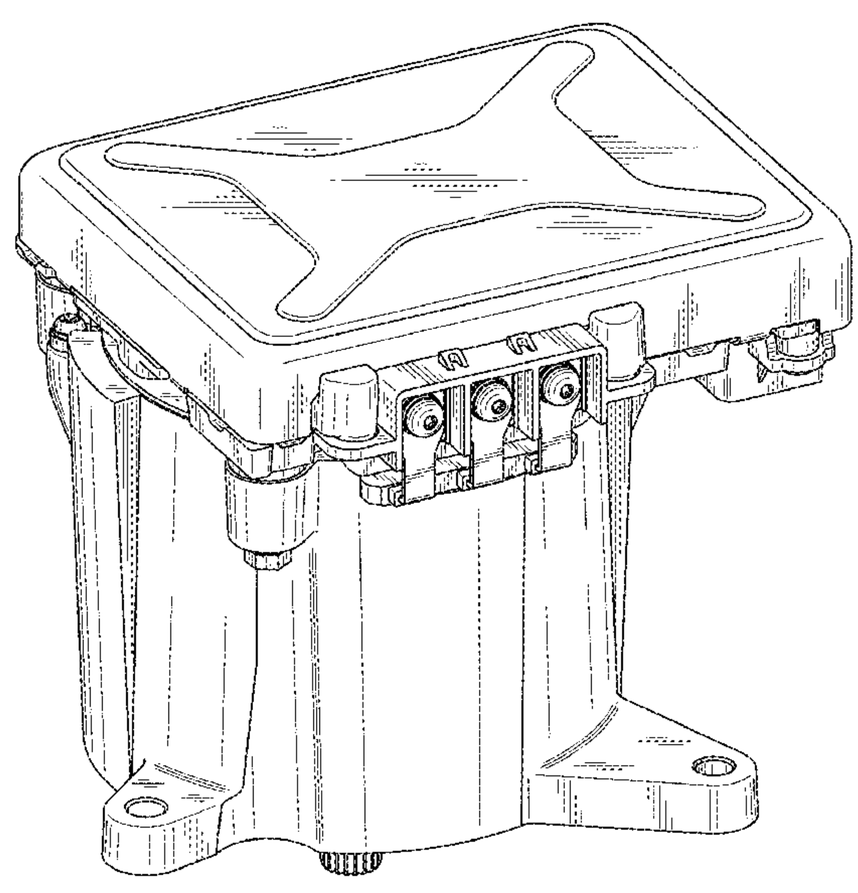

(56) **References Cited**

U.S. PATENT DOCUMENTS

10,566,706	B2 *	2/2020	Asada	H01R 12/55
10,597,069	B2 *	3/2020	Koike	B62D 5/0406
10,654,517	B2 *	5/2020	Fujimoto	B62D 5/0421
10,668,943	B2 *	6/2020	Fujimoto	B62D 6/10
2012/0098391	A1 *	4/2012	Yamasaki	B62D 5/0406 310/68 D
2012/0286605	A1 *	11/2012	Miyachi	B62D 5/0406 310/71
2013/0300235	A1 *	11/2013	Akutsu	B62D 5/0406 310/71
2016/0036296	A1 *	2/2016	Kabune	H02K 11/33 180/446
2017/0373451	A1 *	12/2017	Asada	H02K 11/33
2018/0141583	A1 *	5/2018	Wada	B62D 5/0406
2018/0244301	A1 *	8/2018	Fujimoto	H02K 9/22
2019/0199176	A1 *	6/2019	Kanazawa	H02K 5/225
2019/0248406	A1 *	8/2019	Kaneko	H02K 5/15
2019/0264751	A1 *	8/2019	Oosawa	F16H 57/12
2019/0273416	A1 *	9/2019	Kizu	H02K 3/04
2019/0276072	A1 *	9/2019	Morimoto	H01G 9/26
2019/0300047	A1 *	10/2019	Hamada	B62D 5/0475
2020/0156696	A1 *	5/2020	Hara	H02K 11/33
2020/0212767	A1 *	7/2020	Yatsugi	H05K 7/209

OTHER PUBLICATIONS

Morrison, Brandon. "2009 Chevy Malibu electric power steering motor and torque sensor replacement." YouTube, publsihed Apr. 22, 2018 (Retrieved from the Internet Apr. 15, 2020). Internet URL: <https://www.youtube.com/watch?v=P6oqoLEdPYo> (Year: 2018).*

Decision to Grant Design Registration dated Jan. 8, 2019 issued by the Japanese Patent Office in counterpart application No. 2018-009329.

* cited by examiner

FIG. 1

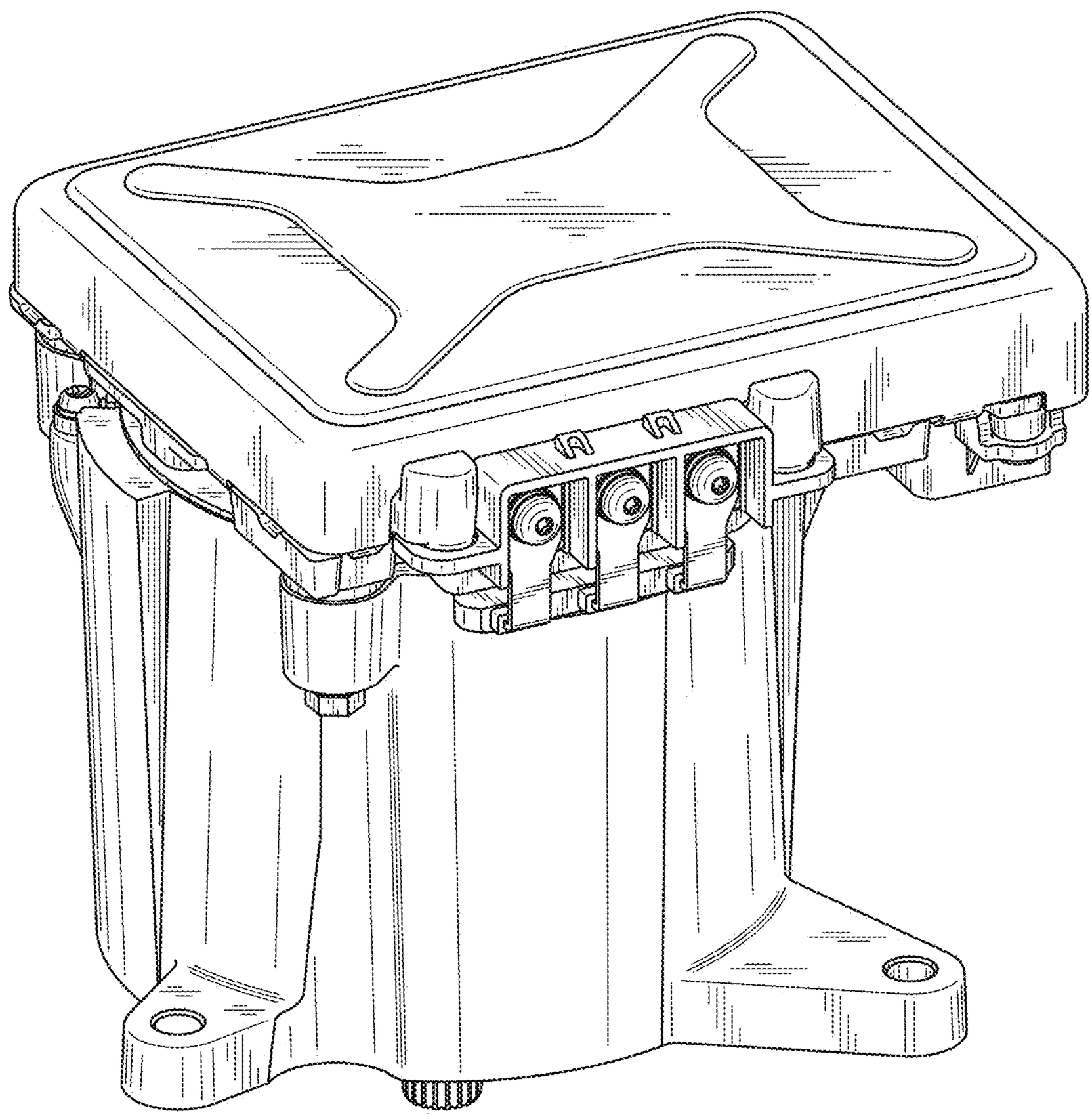

FIG. 2

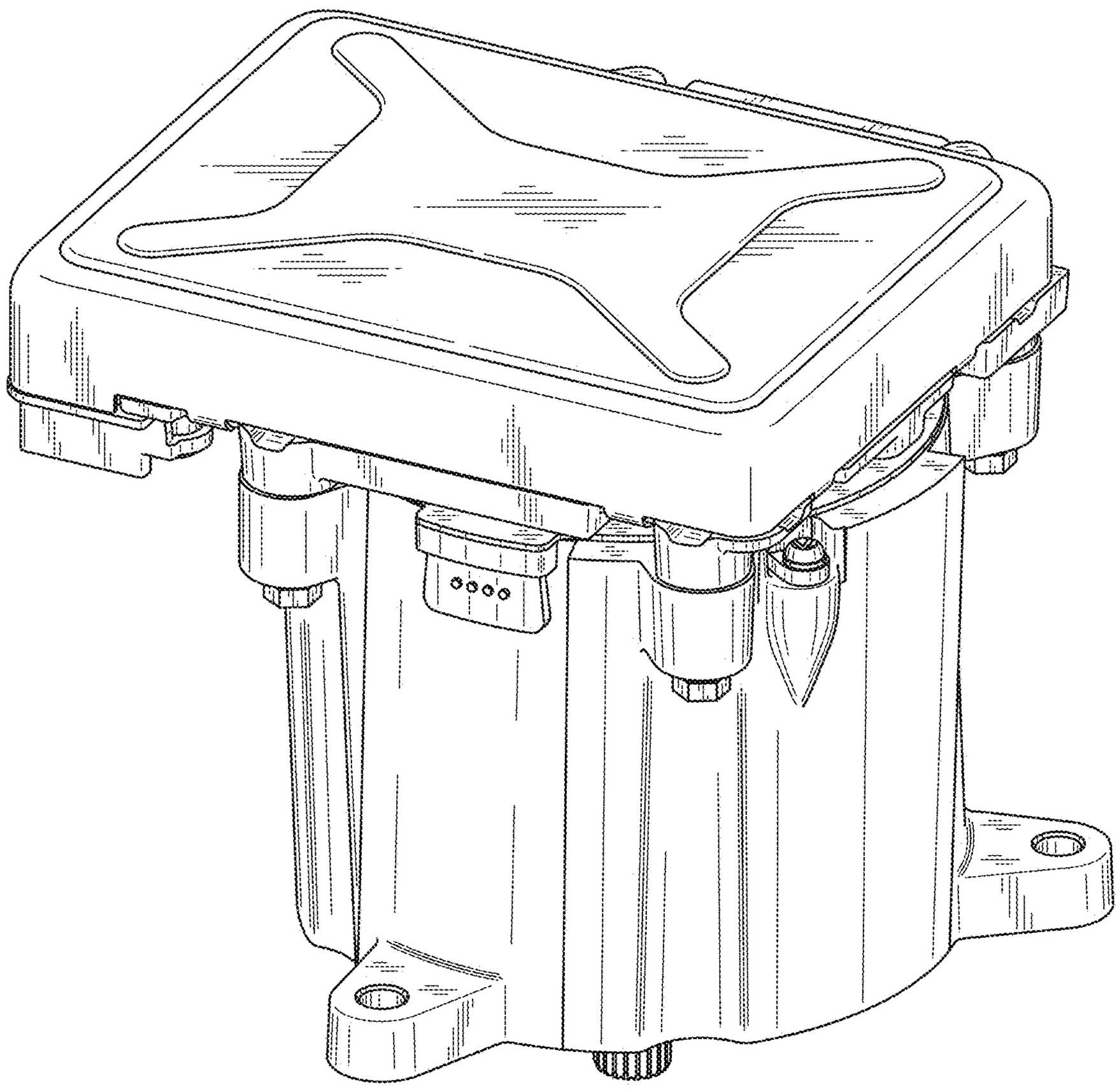

FIG. 3

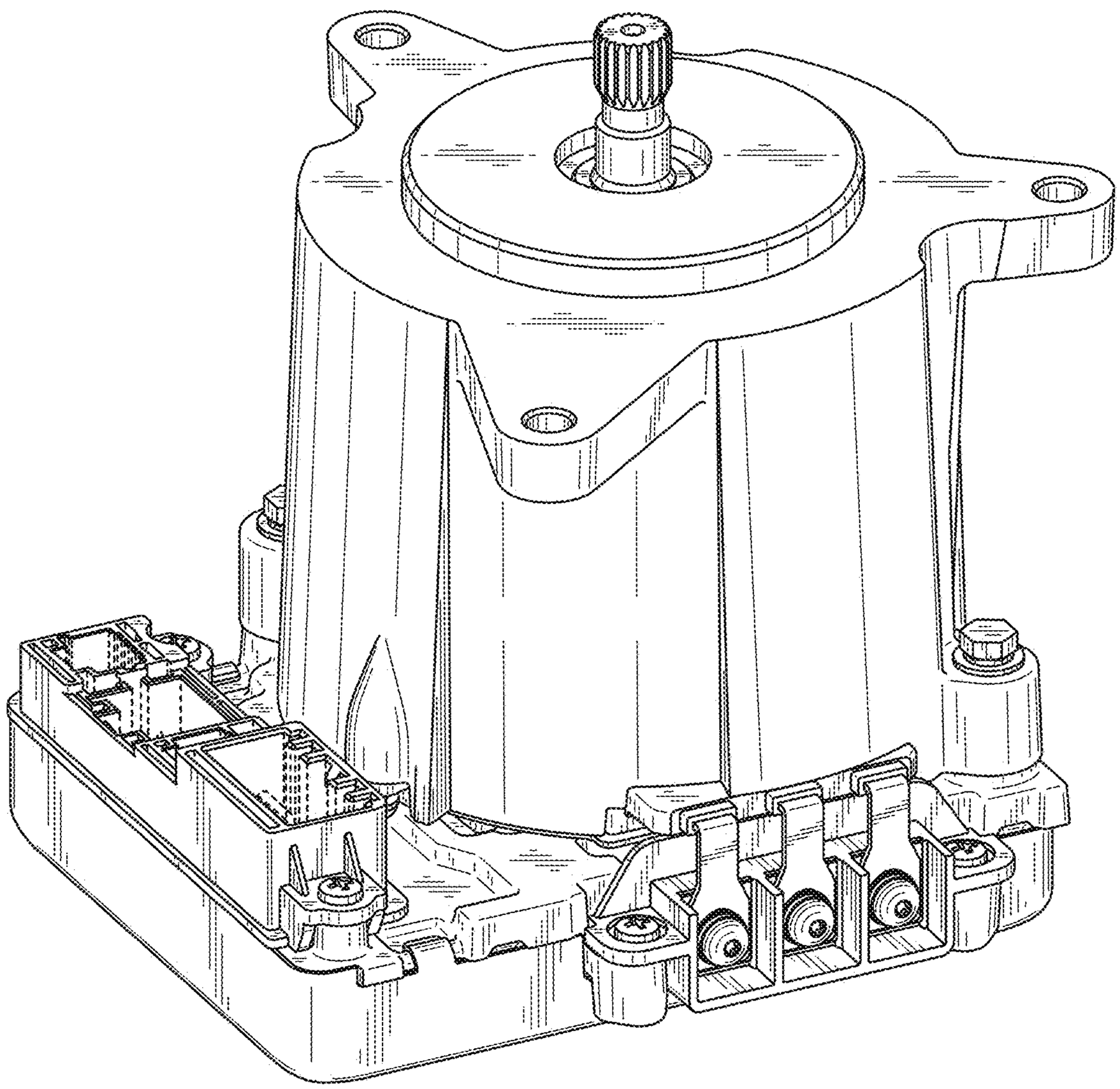

FIG. 4

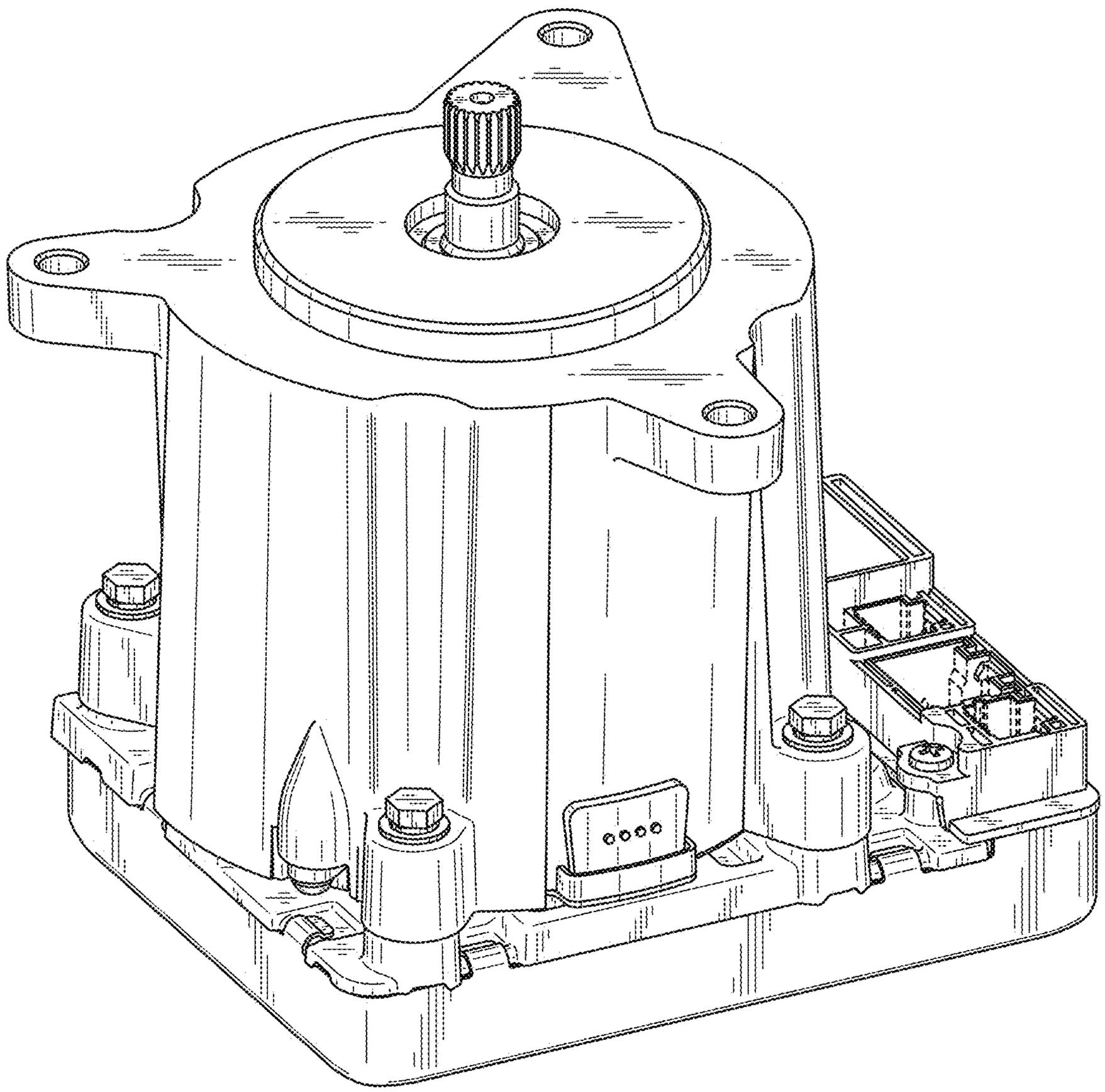

FIG. 5

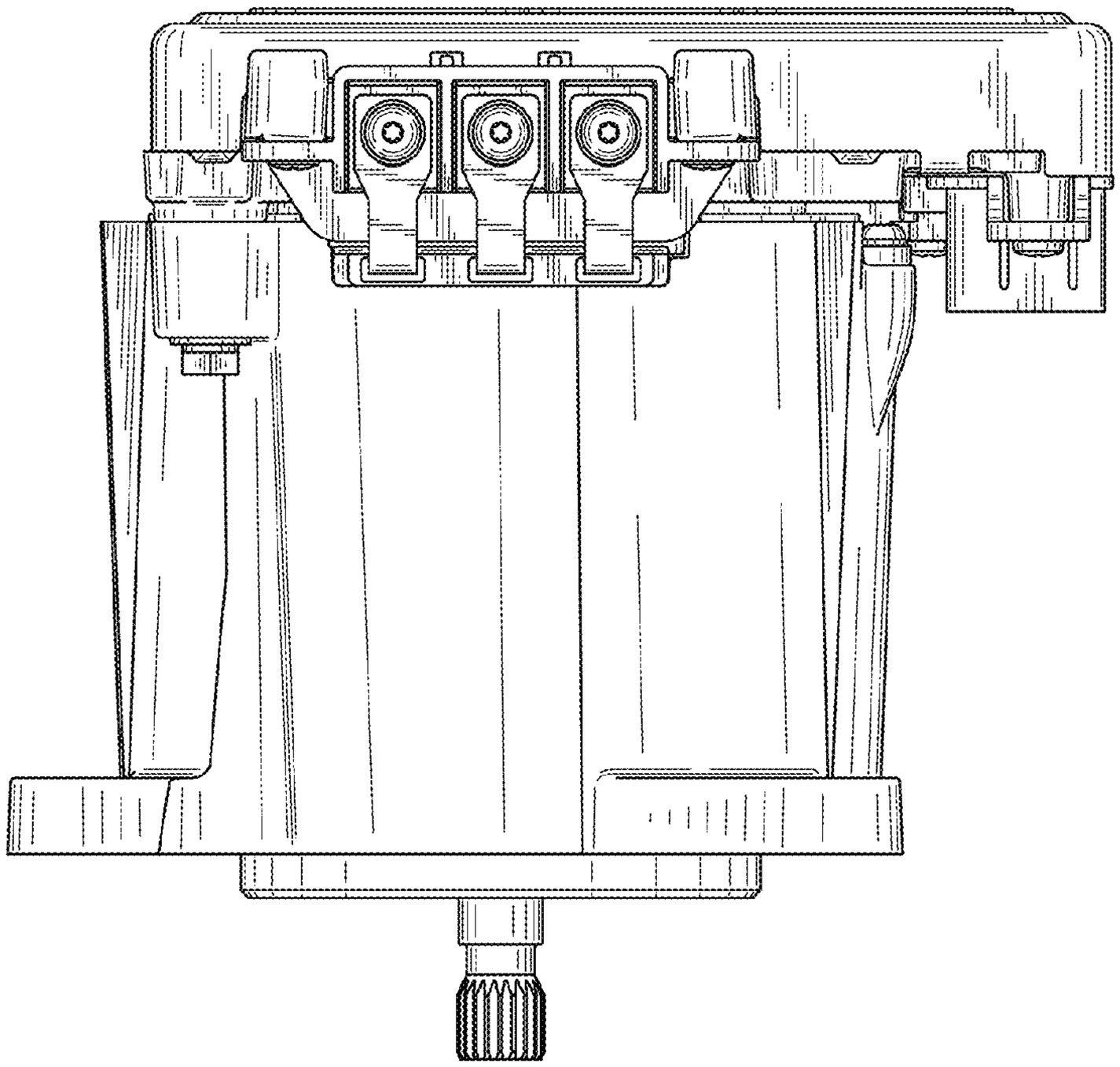

FIG. 6

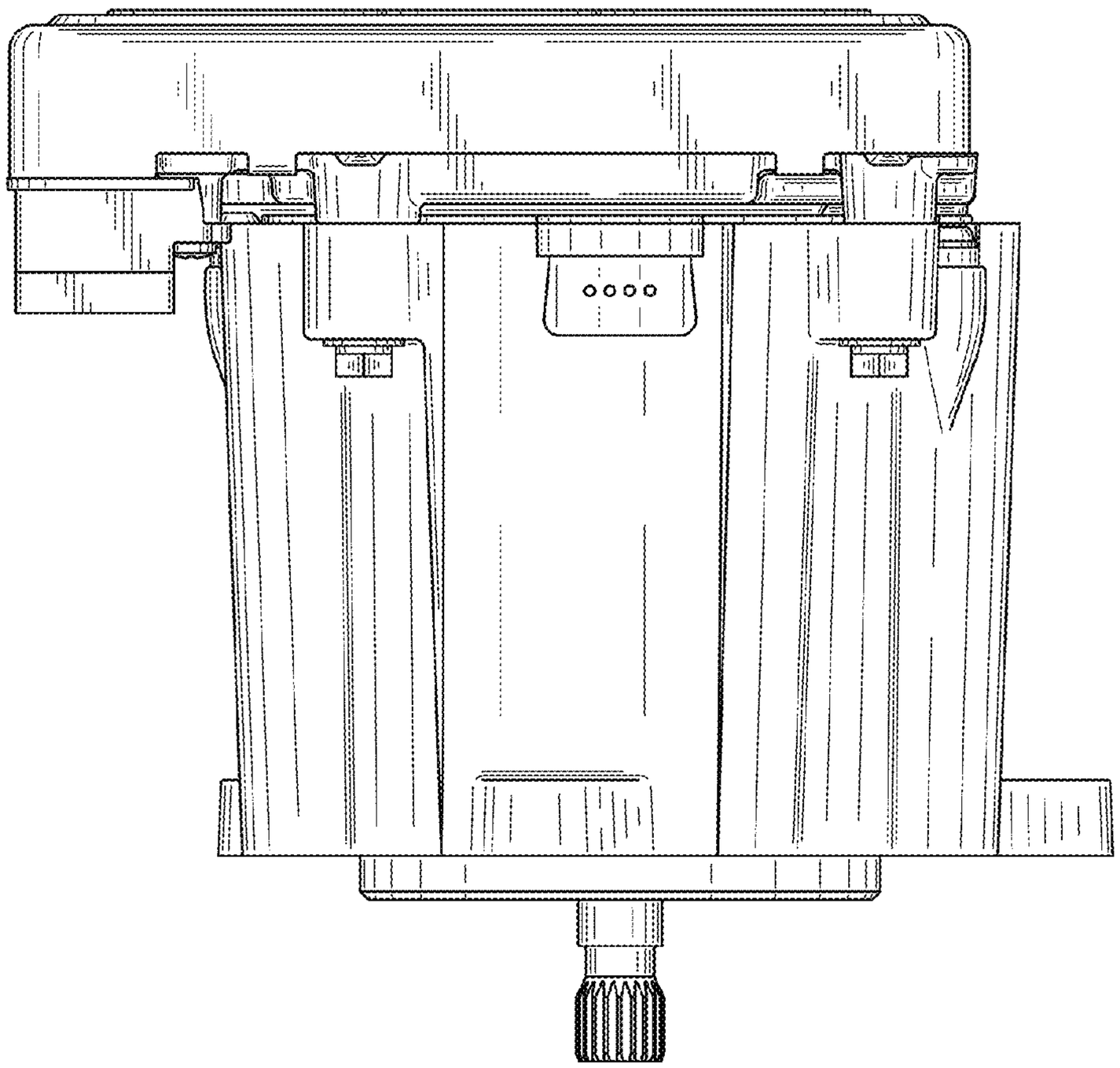

FIG. 7

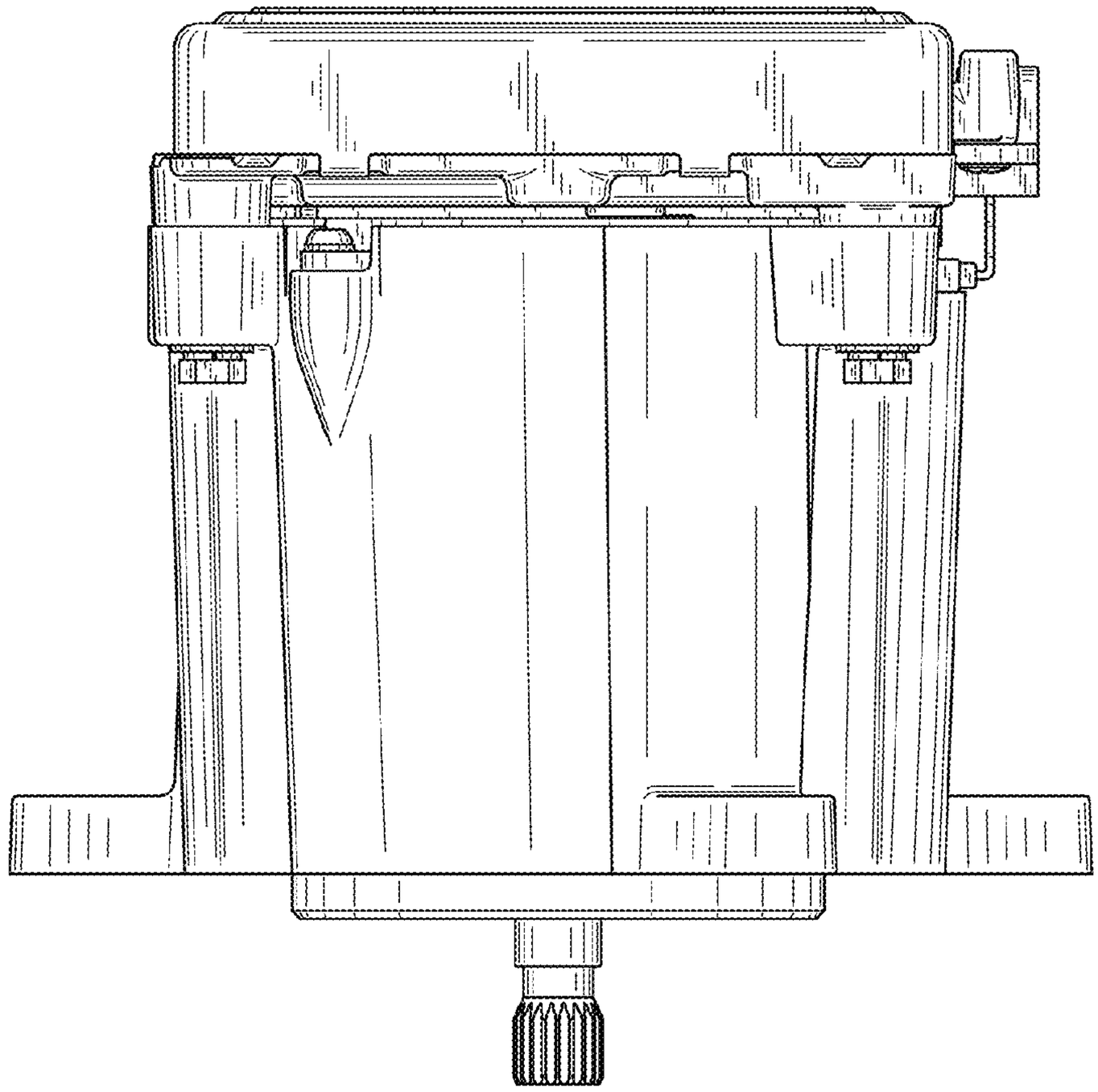

FIG. 8

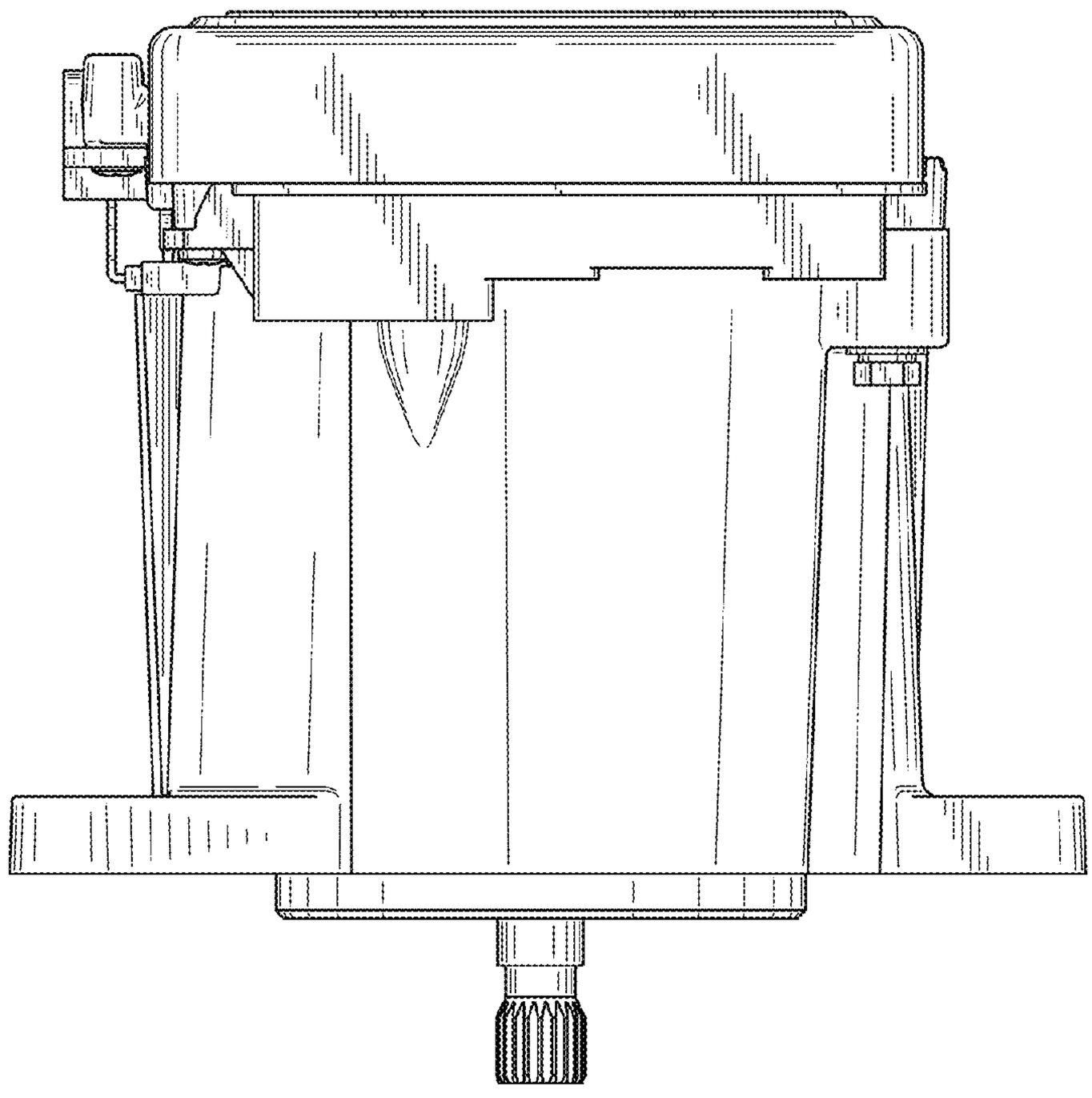

FIG. 9

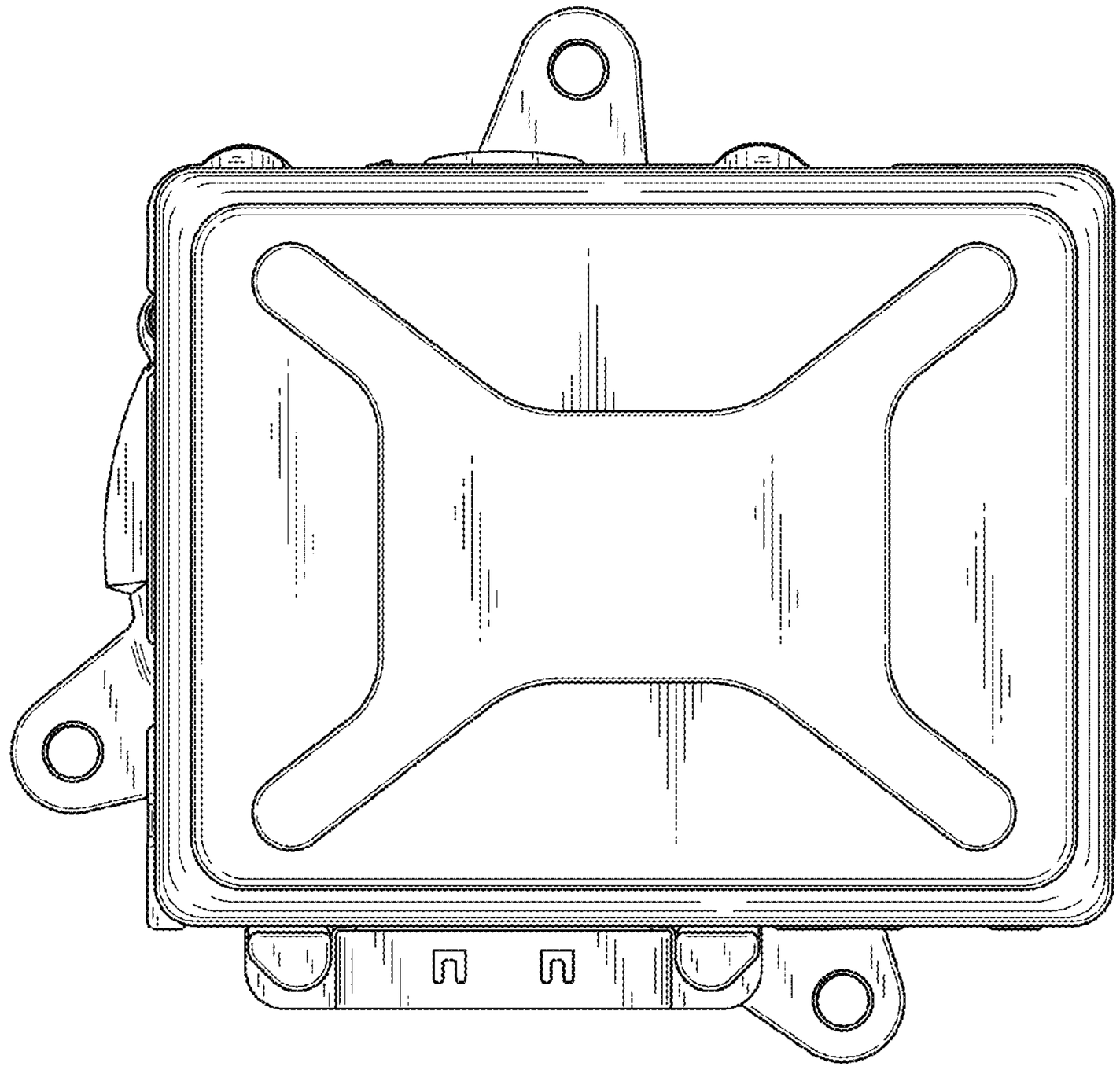
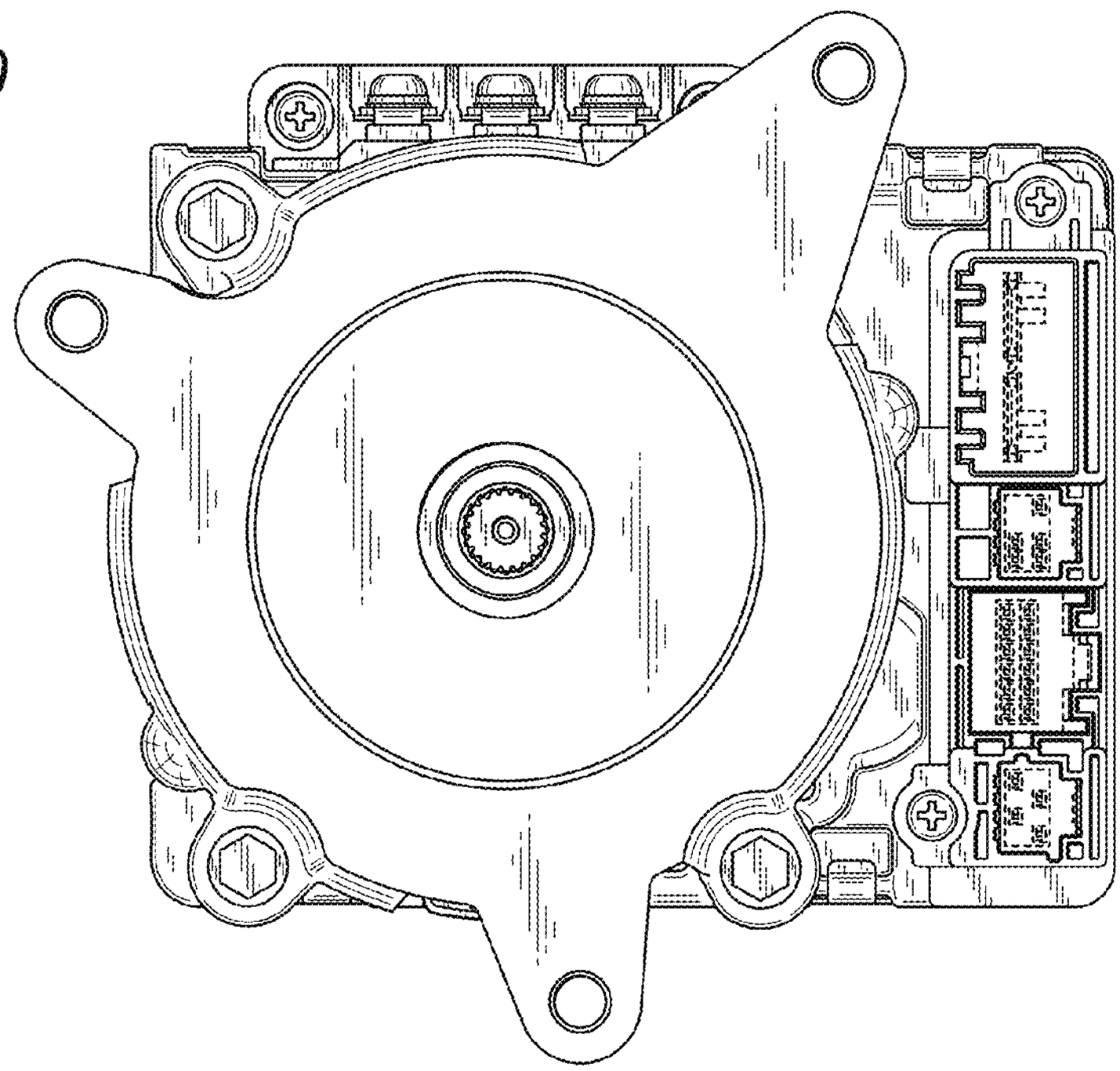
FIG. 10