US00D915919S

(12) United States Design Patent

Löfberg et al.

(10) Patent No.: US D915,919 S
(45) Date of Patent: ** Apr. 13, 2021

(54) **PUSH BUTTON FOR HOISTS, LIFTS AND ELEVATORS**

(71) Applicant: **KONE Corporation**, Helsinki (FI)

(72) Inventors: **Niklas Löfberg**, Helsinki (FI); **Visa Rauta**, Helsinki (FI); **Tomi Kapiainen**, Helsinki (FI); **Kim Heikkinen**, Helsinki (FI); **Miikka Farin**, Helsinki (FI)

(73) Assignee: **KONE Corporation**, Helsinki (FI)

(**) Term: **15 Years**

(21) Appl. No.: **29/682,238**

(22) Filed: **Mar. 4, 2019**

(30) **Foreign Application Priority Data**

Sep. 3, 2018 (EM) 005627320

(51) **LOC (13) Cl.** **10-05**

(52) **U.S. Cl.**
USPC **D10/108**

(58) **Field of Classification Search**
USPC D10/108, 106.95, 104.1; D14/307, 371; D18/4.6
See application file for complete search history.

(56) **References Cited**

U.S. PATENT DOCUMENTS

D451,603	S	*	12/2001	Bastyr	D14/371
D589,829	S	*	4/2009	Friedli	D10/108
D589,831	S	*	4/2009	Friedli	D10/108
D601,052	S	*	9/2009	Friedli	D10/108
D665,687	S	*	8/2012	Lee	D10/108
D705,108	S	*	5/2014	Lee	D10/108
D748,515	S	*	2/2016	Matsuyama	D10/108
D831,639	S	*	10/2018	Terry	D14/307
D838,618	S	*	1/2019	Nagaki	D10/104.1
D880,327	S	*	4/2020	Costabile	D10/108
D881,269	S	*	4/2020	Blanc	D18/4.6
D902,918	S	*	11/2020	Friedli	D14/307
D904,394	S	*	12/2020	Friedli	D14/307
D904,915	S	*	12/2020	Gong	D10/108

OTHER PUBLICATIONS

Kone,"Kone KSP 858 touchscreen destination operating panel," retrieved from https://www.kone.com/Images/factsheet-kone-ksp-858_tcm207-18645.pdf. p. 1-4, 2014.

Kone, "KSS 800 Series Signalization for Elevators With Kone Destination—Stainless steel finishing," retrieved from https://www.kone.com/Images/brochure-kone-kss-800-and-kss-900-signalization_tcm95-17971.pdf, pp. 1-8. 2016.

* cited by examiner

Primary Examiner — George D. Kirschbaum
(74) *Attorney, Agent, or Firm* — Leason Ellis LLP

(57) **CLAIM**

The ornamental design for a push button for hoists, lifts and elevators, as shown and described.

DESCRIPTION

FIG. **1** is a first perspective view of our new design of a push button for hoists, lifts and elevators;
FIG. **2** is a second perspective view thereof;
FIG. **3** is a front elevation view thereof;
FIG. **4** is a rear elevation view thereof;
FIG. **5** is a right side elevation view thereof;
FIG. **6** is a left side elevation view thereof;
FIG. **7** is a top plan view thereof; and,
FIG. **8** is a bottom plan view thereof.

1 Claim, 8 Drawing Sheets

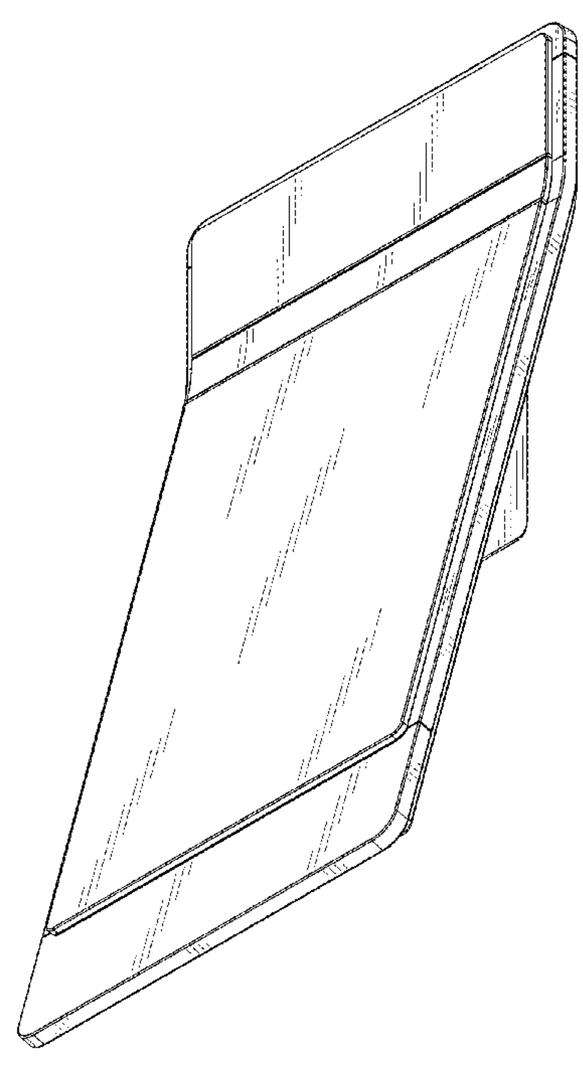

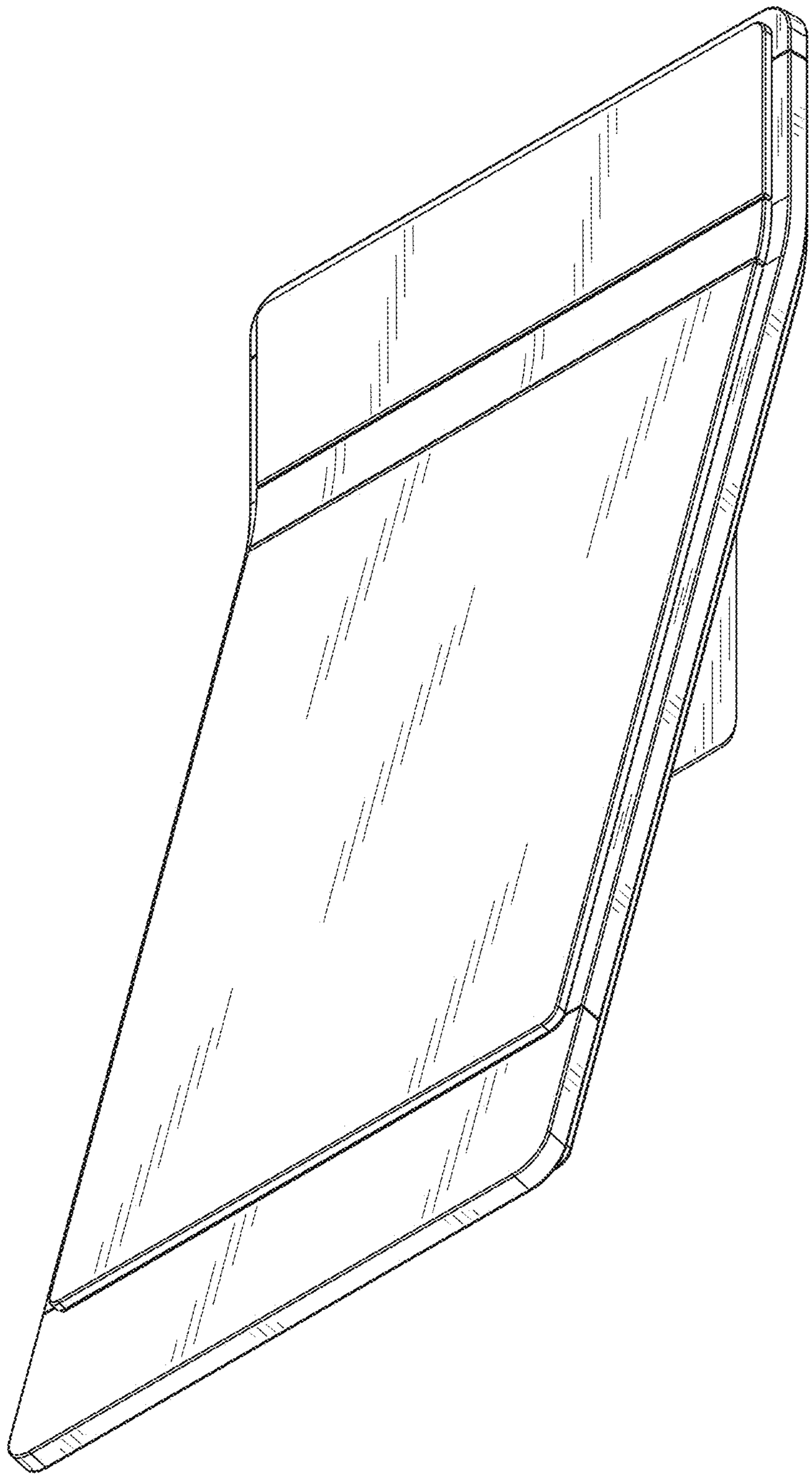

Fig. 1

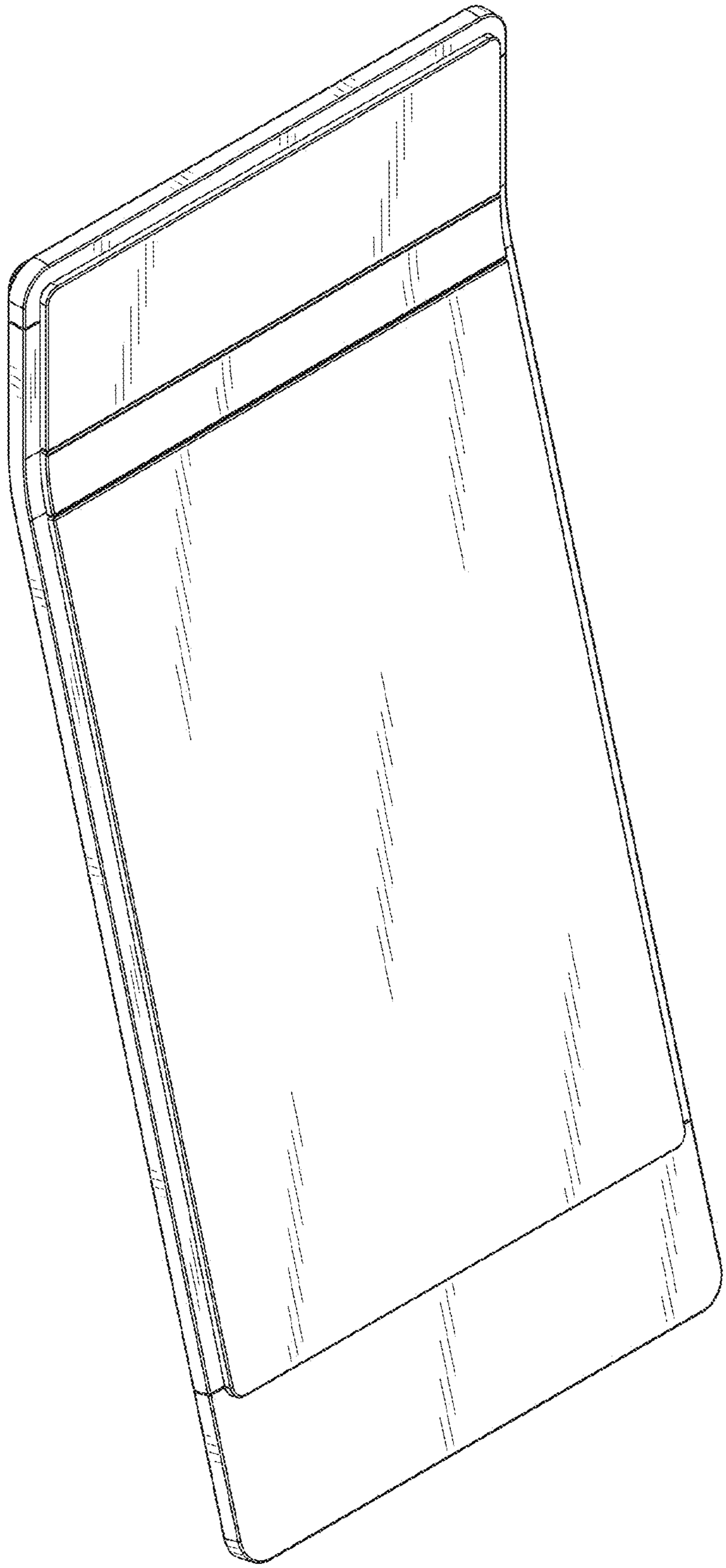

Fig. 2

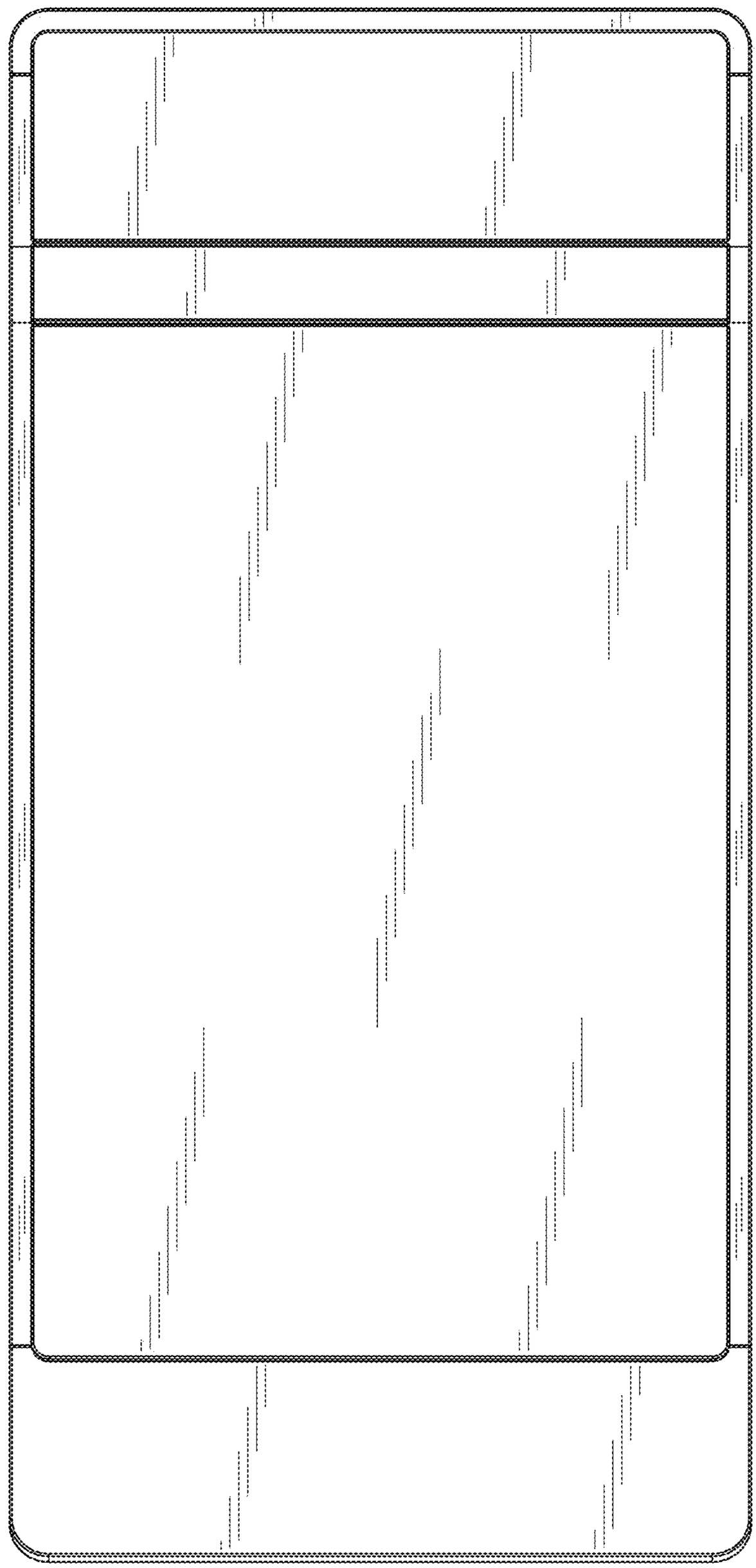

Fig. 3

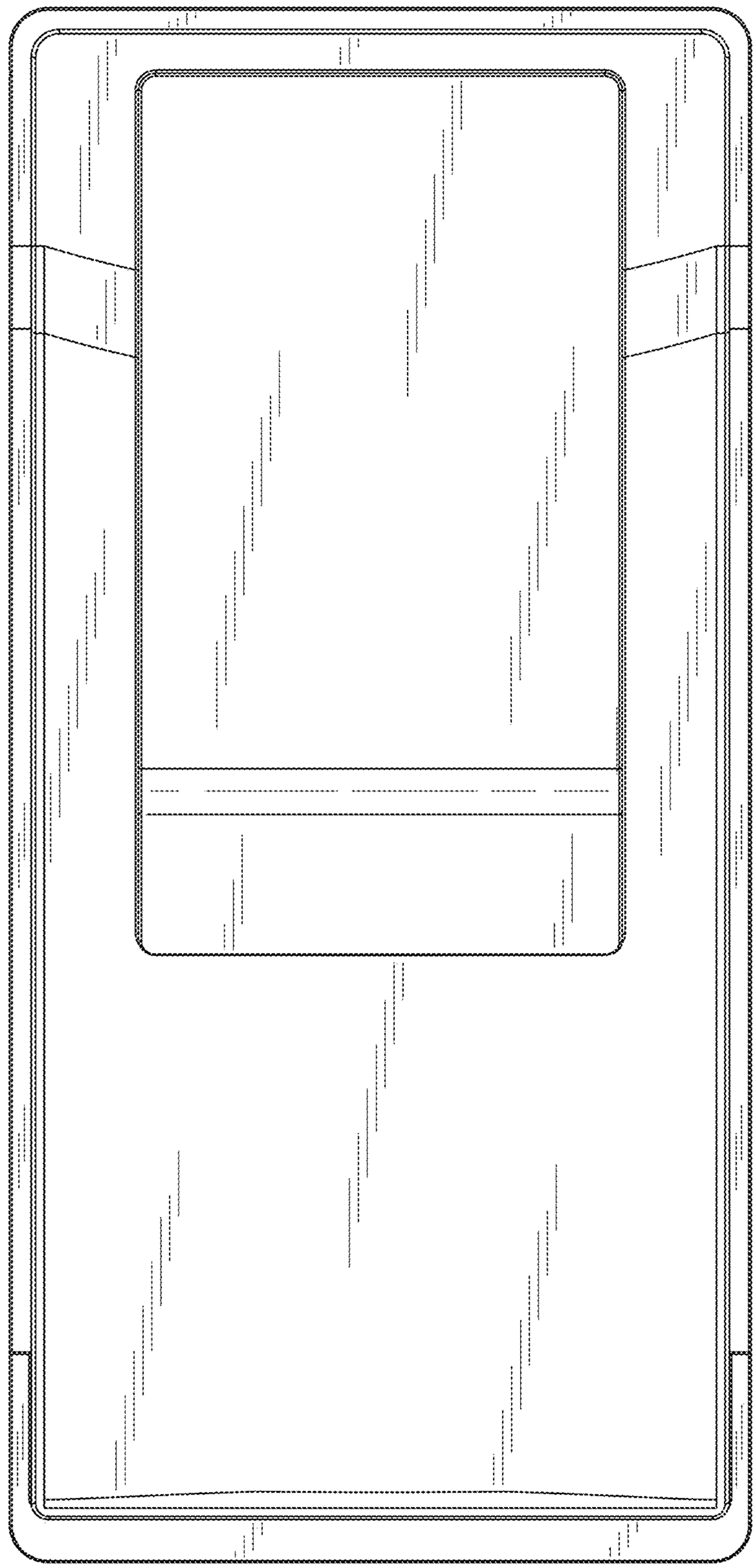

Fig. 4

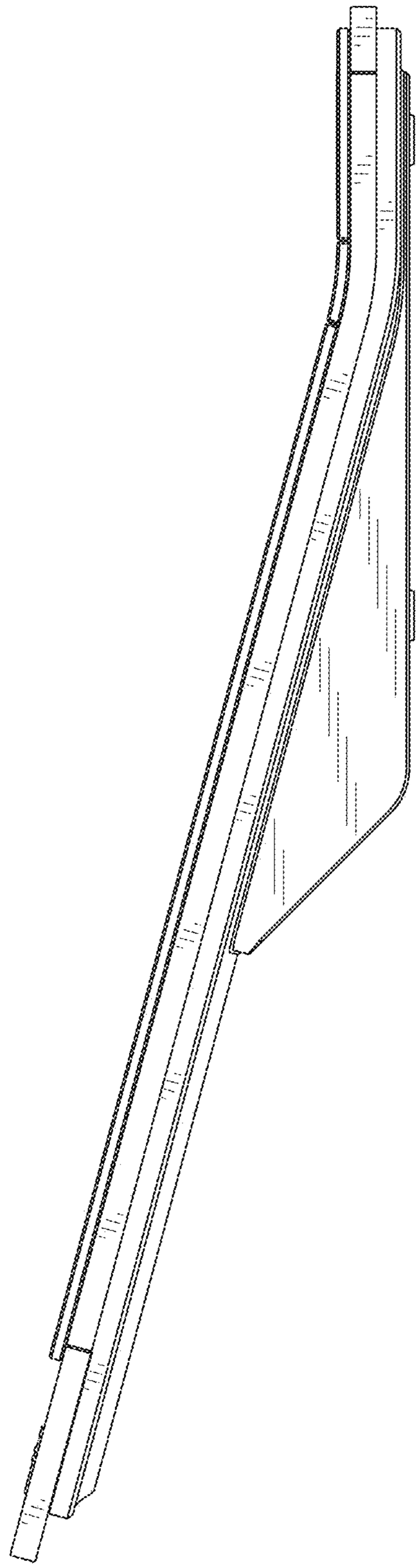

Fig. 5

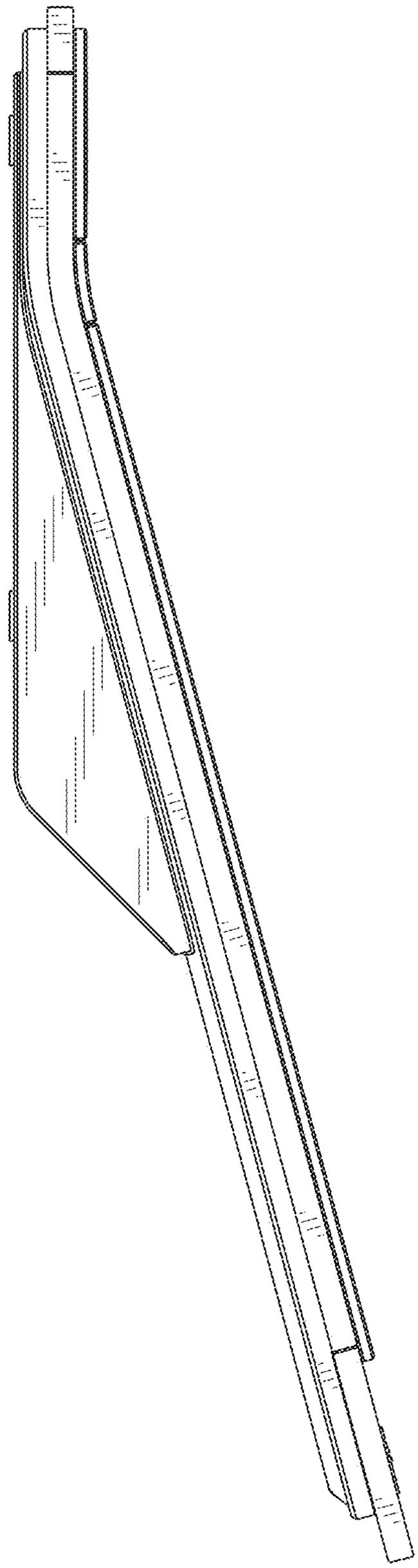

Fig. 6

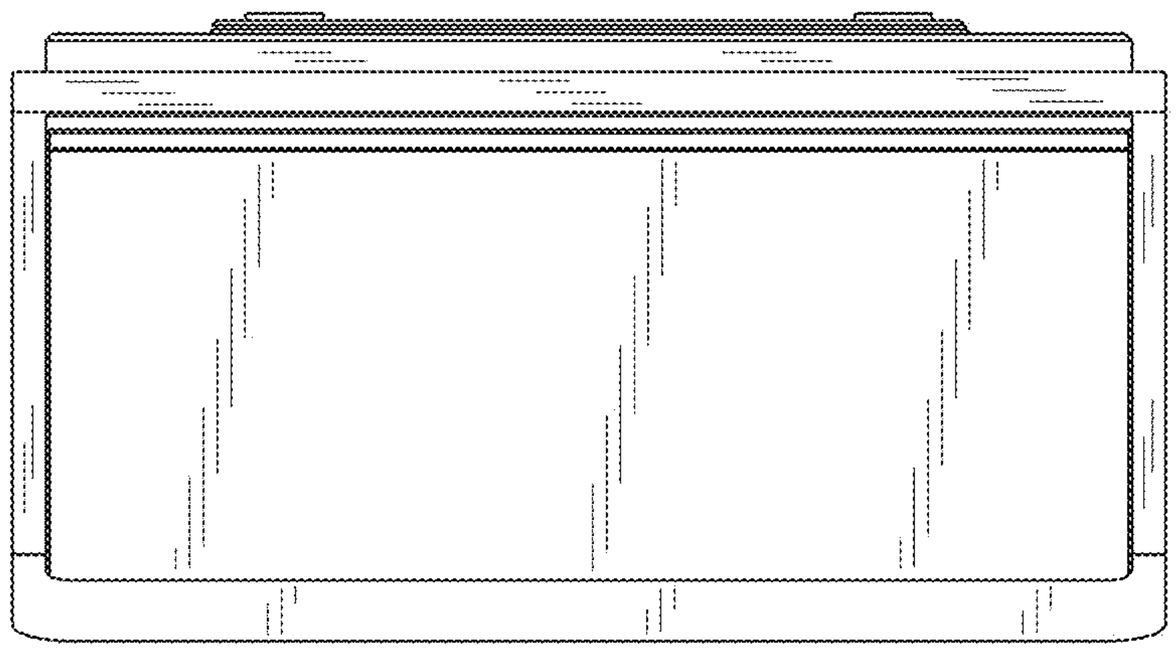

Fig. 7

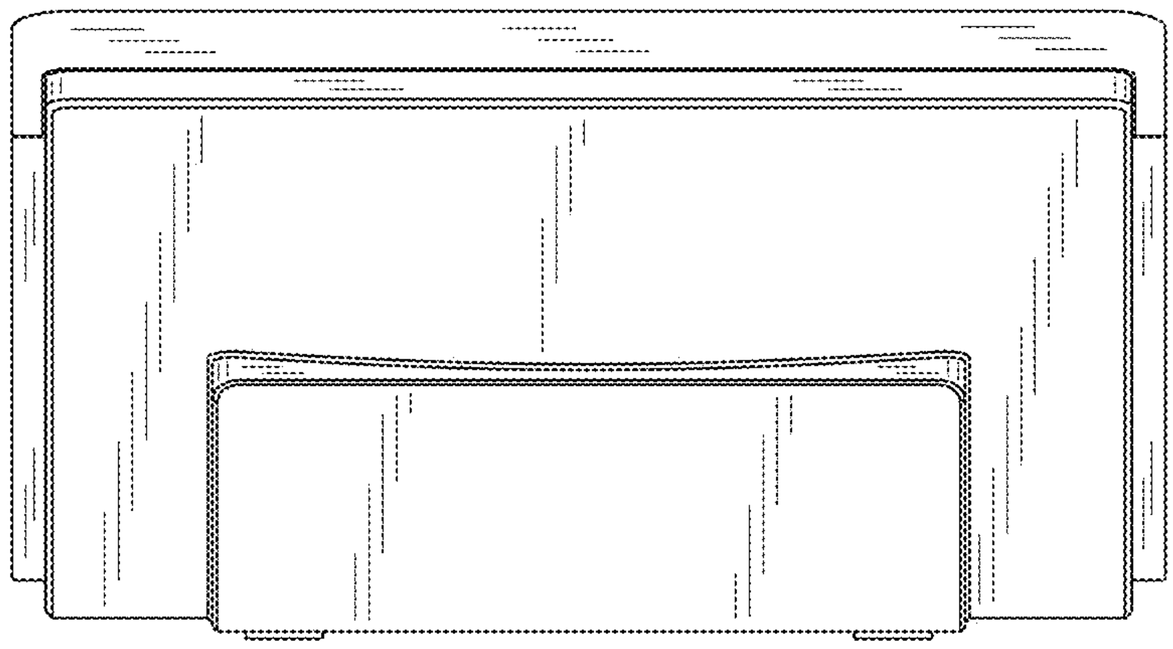

Fig. 8