US00D915136S

(12) United States Design Patent

Bennion et al.

(10) Patent No.: US D915,136 S
(45) Date of Patent: ** Apr. 6, 2021

(54) **COOKING APPARATUS**

(71) Applicant: **Weber-Stephen Products LLC**, Palatine, IL (US)

(72) Inventors: **Derek Bennion**, Chicago, IL (US); **Qian Hamel**, Evanston, IL (US); **Carmen O. Lira-Nunez**, Downers Grove, IL (US)

(73) Assignee: **WEBER-STEPHEN PRODUCTS LLC**, Palatine, IL (US)

(**) Term: **15 Years**

(21) Appl. No.: **29/701,945**

(22) Filed: **Aug. 15, 2019**

Related U.S. Application Data

(63) Continuation of application No. 29/694,202, filed on Jun. 7, 2019.

(51) **LOC (13) Cl.** **07-02**

(52) **U.S. Cl.**
USPC **D7/402**

(58) **Field of Classification Search**
USPC D7/332, 334, 339, 368, 387, 388, 393, D7/402, 404, 405, 406, 672, 688, 697, D7/698; D6/300, 546, 549; D8/300, D8/315; D12/198; D20/22, 28; D24/183, 184; D29/122
(Continued)

(56) **References Cited**

U.S. PATENT DOCUMENTS

D179,345 S 12/1956 Henry et al.
4,823,684 A 4/1989 Traeger et al.
(Continued)

OTHER PUBLICATIONS

Weber SmokeFire Pellet Grill Review, first available Nov. 27, 2019, YouTube, [online], [site visited Dec. 17, 2020], Available from internet URL: https://www.youtube.com/watch?v=iRSdgBebvLY&feature=youtu.be (Year: 2019).*
(Continued)

Primary Examiner — Mary Ann Calabrese
Assistant Examiner — Natalya M Rapundalo
(74) *Attorney, Agent, or Firm* — Hanley, Flight & Zimmerman, LLC

(57) **CLAIM**

The ornamental design for a "cooking apparatus", as shown and described.

DESCRIPTION

FIG. **1** is a front right perspective view of a cooking apparatus.
FIG. **2** is a front left perspective view of the cooking apparatus of FIG. **1**.
FIG. **3** is a rear perspective view of the cooking apparatus of FIG. **1**.
FIG. **4** is a front view of the cooking apparatus of FIG. **1**.
FIG. **5** is a rear view of the cooking apparatus of FIG. **1**.
FIG. **6** is a left side view of the cooking apparatus of FIG. **1**.
FIG. **7** is right side view of the cooking apparatus of FIG. **1**.
FIG. **8** is a top view of the cooking apparatus of FIG. **1**.
FIG. **9** is a bottom view of the cooking apparatus of FIG. **1**; and,
FIG. **10** is an enlarged, rear perspective view of the cooking apparatus of FIG. **1**.
The features shown in broken lines form no part of the claimed design.
The lighter solid lines denote surfaces and contours. Line shading is not surface ornamentation.

1 Claim, 10 Drawing Sheets

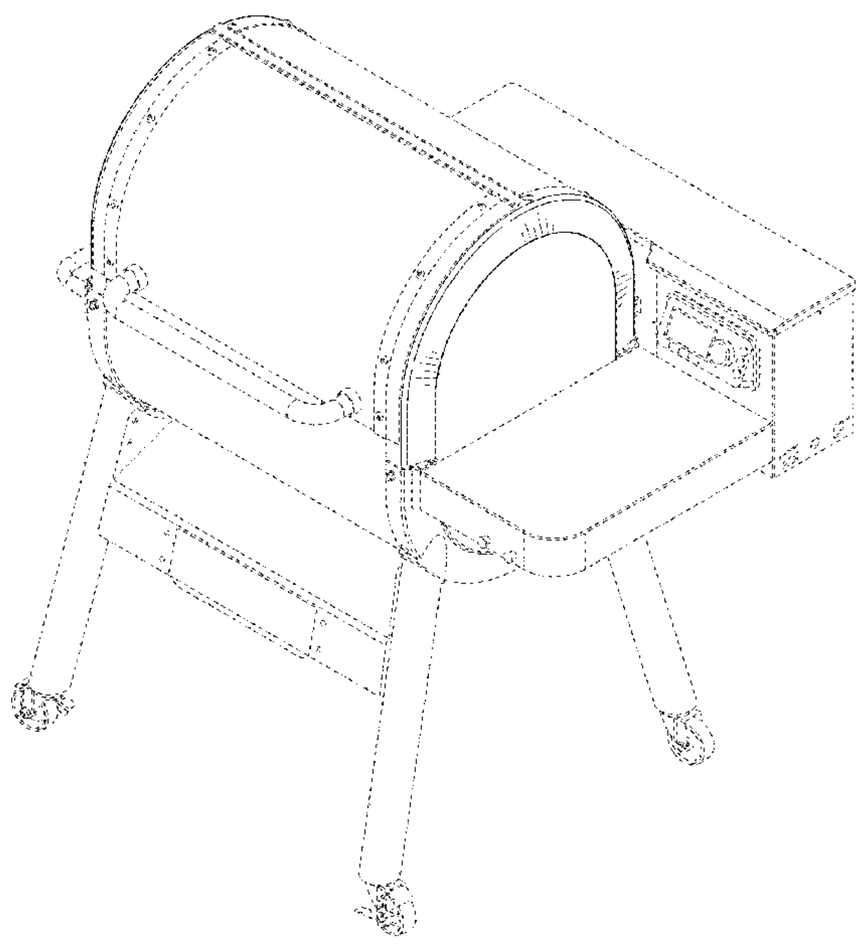

(58) **Field of Classification Search**
CPC .. A47J 36/00; A47J 37/00; A47J 37/06; A47J 43/00; A47J 43/20; A47J 47/00
See application file for complete search history.

(56) **References Cited**

U.S. PATENT DOCUMENTS

5,251,607	A	10/1993	Traeger et al.	
5,429,110	A	7/1995	Burke et al.	
6,223,737	B1	5/2001	Buckner	
7,900,553	B1	3/2011	Maurin	
8,267,078	B2	9/2012	Kuntz	
D695,055	S	12/2013	Measom et al.	
8,833,360	B2	9/2014	Knight	
D733,483	S	7/2015	Baker et al.	
9,186,020	B1	11/2015	Phillips	
D760,539	S	7/2016	Colston	
9,585,518	B1	3/2017	Phillips	
9,635,978	B2	5/2017	Measom et al.	
9,814,354	B2	11/2017	McAdams et al.	
9,913,559	B2	3/2018	Polter et al.	
9,930,991	B2	4/2018	Traeger	
D817,091	S	5/2018	Colston	
D825,990	S	8/2018	Colston et al.	
D827,368	S	9/2018	Colston	
D827,370	S	9/2018	Colston	
D827,371	S	9/2018	Colston et al.	
D829,499	S	10/2018	Colston	
10,105,007	B2	10/2018	Colston et al.	
D839,047	S *	1/2019	Colston	A47J 37/0704 D7/402
10,213,051	B2	2/2019	Colston et al.	
10,330,322	B2	6/2019	Measom et al.	
2005/0217659	A1	10/2005	McClenahan	
2013/0174834	A1	7/2013	Measom et al.	
2013/0298894	A1	11/2013	Kleinsasser	
2014/0326232	A1	11/2014	Traeger	
2014/0326233	A1	11/2014	Traeger	
2016/0327263	A1	11/2016	Traeger	
2017/0065124	A1	3/2017	Colston	
2017/0164783	A1	6/2017	Sauerwein et al.	
2017/0176018	A1	6/2017	Traeger	
2018/0070772	A1	3/2018	McAdams et al.	
2018/0168395	A1	6/2018	Colston	
2018/0168397	A1	6/2018	Colston	
2019/0133374	A1	5/2019	McAdams et al.	
2019/0150663	A1	5/2019	Colston et al.	
2020/0240643	A1 *	7/2020	Donnelly	H04L 67/125

OTHER PUBLICATIONS

Design No. 007342720-0001-0010, Dec. 5, 2019—European Union Intellectual Property Office (EUIPO) Publication Date—Mar. 4, 2020 Owner—Weber-Stephen Products Llc, Designer—Derek Bennion et. al. DesignView, available at www.tmdn.org/tmdsview-web/welcome (Year: 2020).*

Design No. 305816794, Jun. 2, 2020—China National Intellectual Property Administration (CNIPA) Publication Date—Jun. 2, 2020 Owner—Weber-Stephen Products Co, Designer—D. Bennian et. al. WIPO, available at https://www3.wipo.int/designdb/en/index.jsp (Year: 2020).*

SmokeFire EX4 (2nd Gen) Wood Fired Pellet Grill, [online], [site visited Dec. 17, 2020], Available from internet URL: https://www.weber.com/US/en/grills/wood-pellet-grills/smokefire-series/22510201.html (Year: 2020).*

SmokeFire EX6 (2nd Gen) Wood Fired Pellet Grill, [online], [site visited Dec. 17, 2020], Available from internet URL: https://www.weber.com/US/en/grills/wood-pellet-grills/smokefire-series/23510201.html (Year: 2020).*

IP Australia, "Certificate of examination," issued in connection with Australian Design Application No. 201916738, dated May 8, 2020, 2 pages.

IP Australia, "Certificate of examination," issued in connection with Australian Design Application No. 201916740, dated May 8, 2020, 2 pages.

IP Australia, "Certificate of examination," issued in connection with Australian Design Application No. 201916742, dated May 8, 2020, 2 pages.

IP Australia, "Certificate of examination," issued in connection with Australian Design Application No. 201916743, dated May 8, 2020, 2 pages.

IP Australia, "Certificate of examination," issued in connection with Australian Design Application No. 201916744, dated May 8, 2020, 2 pages.

IP Australia, "Certificate of examination," issued in connection with Australian Design Application No. 201916745, dated May 11, 2020, 2 pages.

IP Australia, "Certificate of examination," issued in connection with Australian Design Application No. 201916746, dated May 11, 2020, 2 pages.

IP Australia, "Certificate of examination," issued in connection with Australian Design Application No. 201916751, dated May 11, 2020, 2 pages.

IP Australia, "Certificate of examination," issued in connection with Australian Design Application No. 201916752, dated May 11, 2020, 2 pages.

IP Australia, "Certificate of examination," issued in connection with Australian Design Application No. 201916753, dated May 11, 2020, 2 pages.

China National Intellectual Property Administration, "Notice of Decision of Grant of Patent Right for Design," issued in connection with Chinese Patent Application No. 201930653629.X, dated Apr. 9, 2020, 4 pages.

* cited by examiner

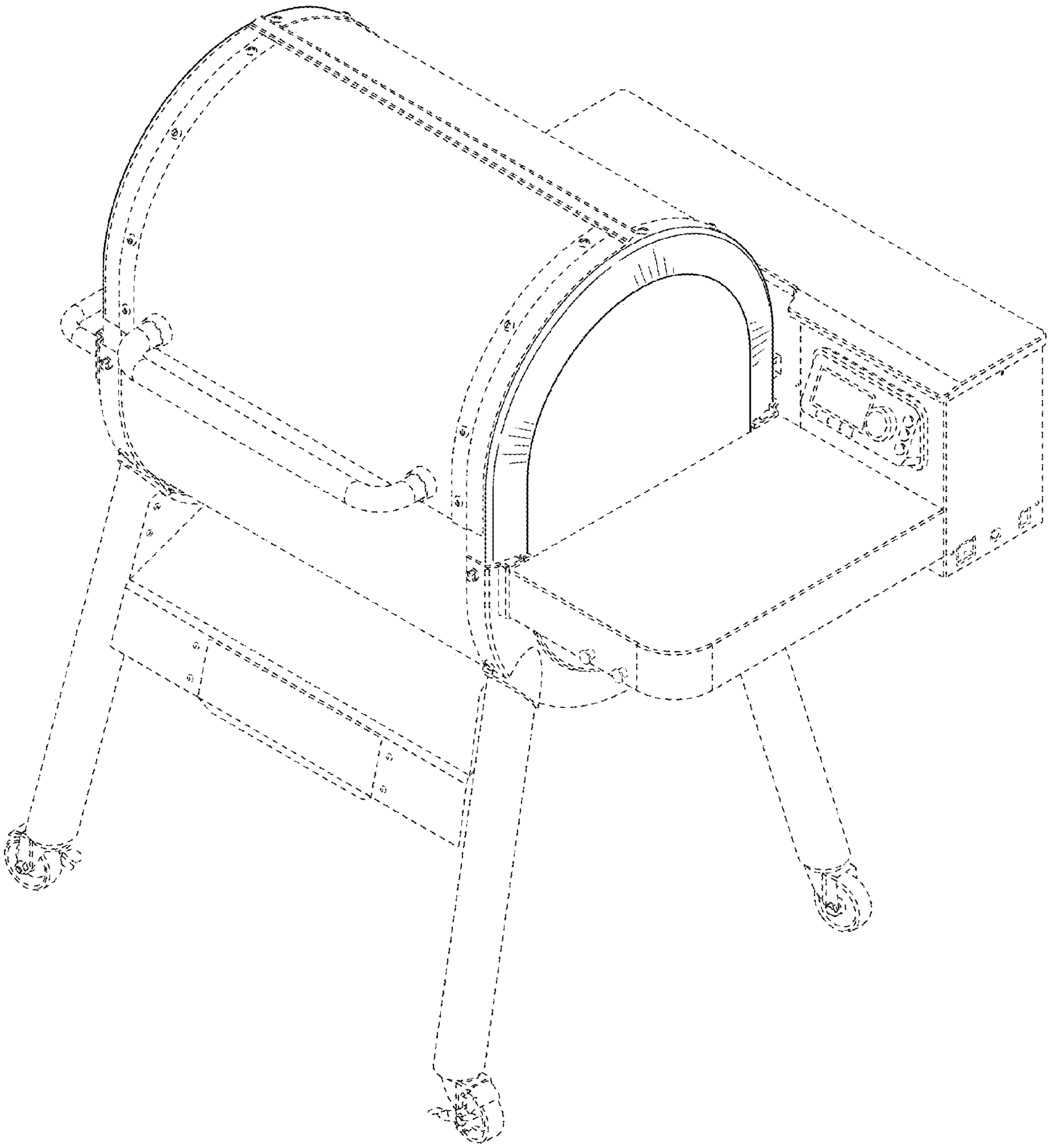

FIG. 1

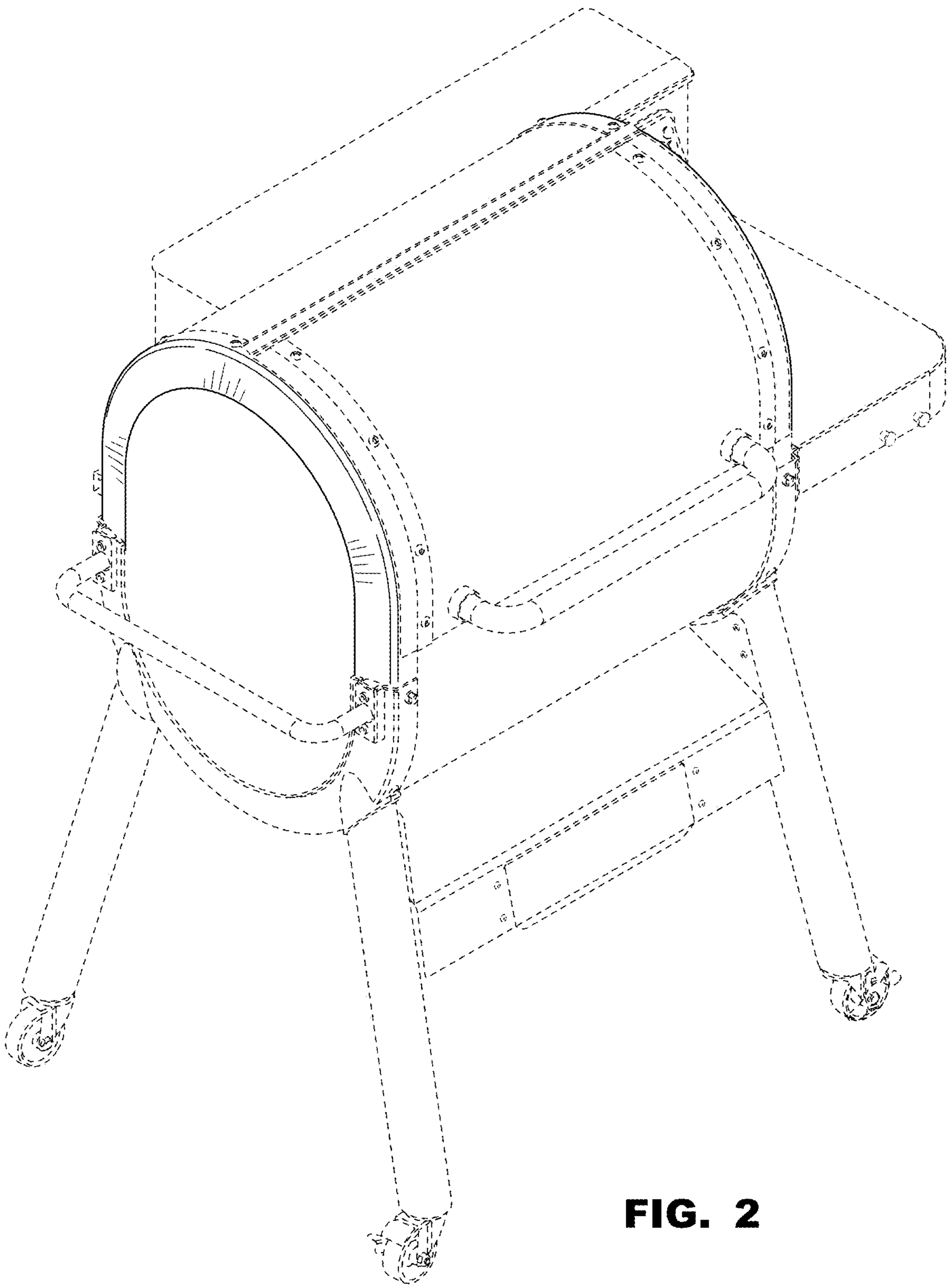

FIG. 2

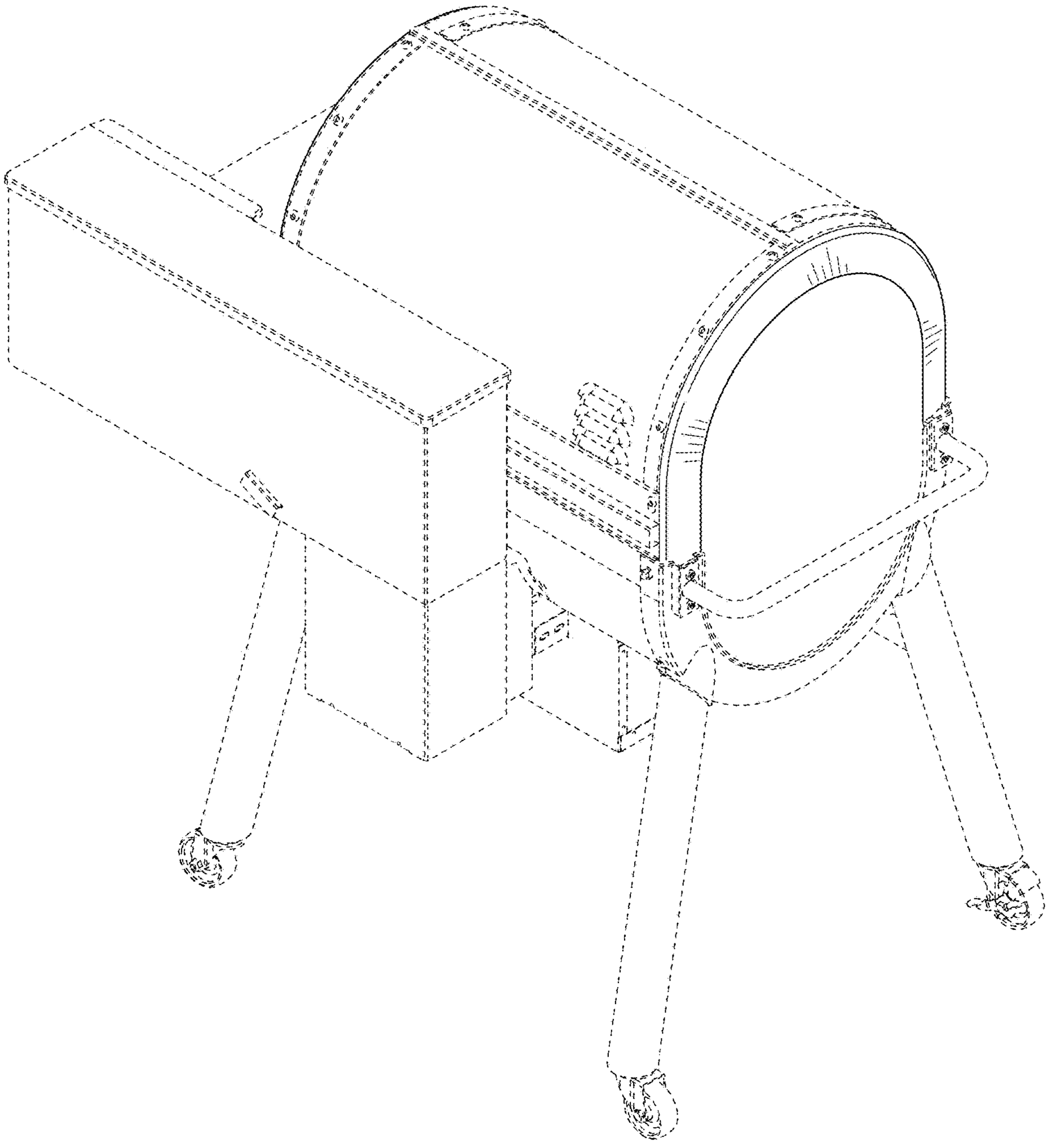

FIG. 3

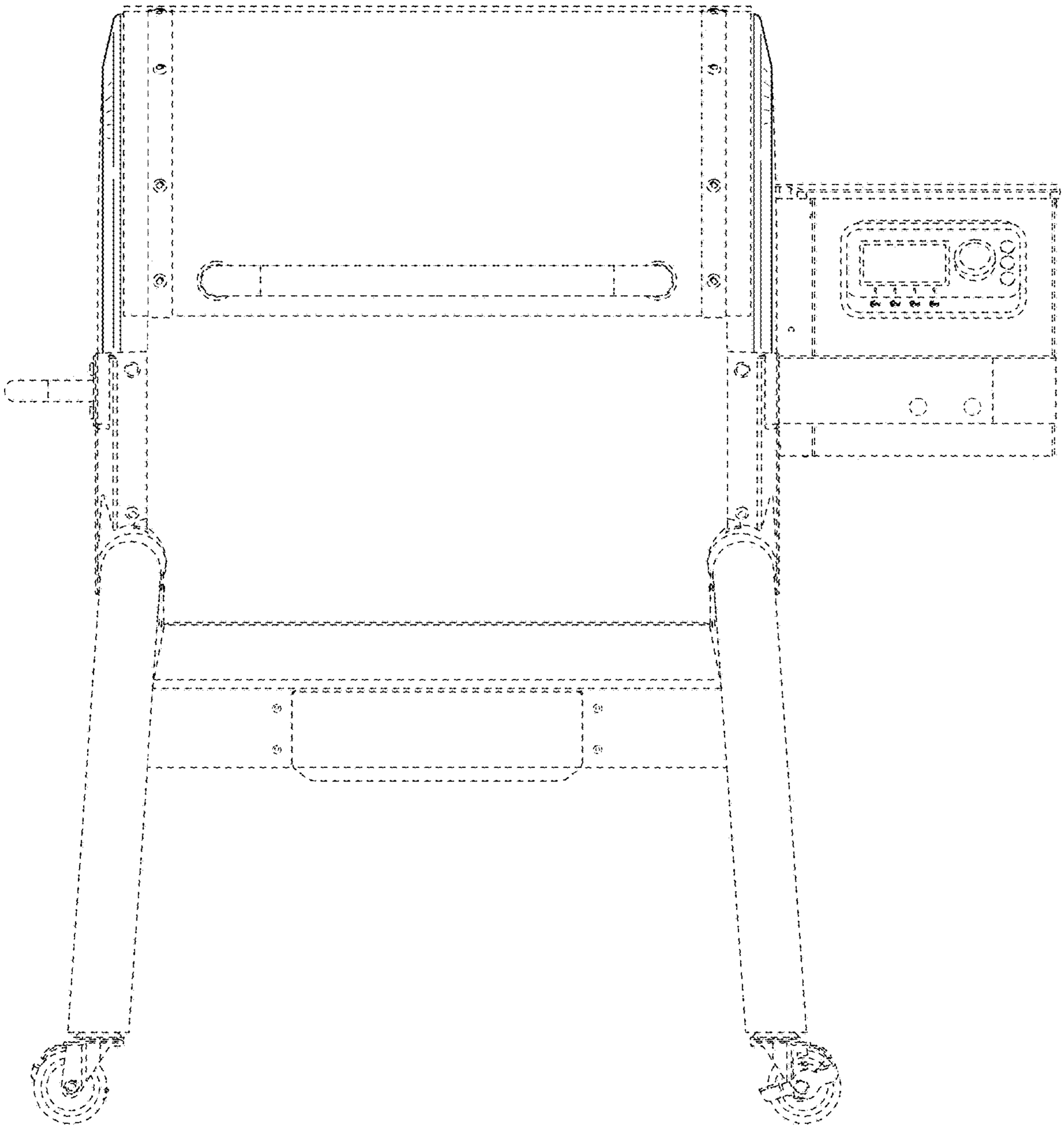

FIG. 4

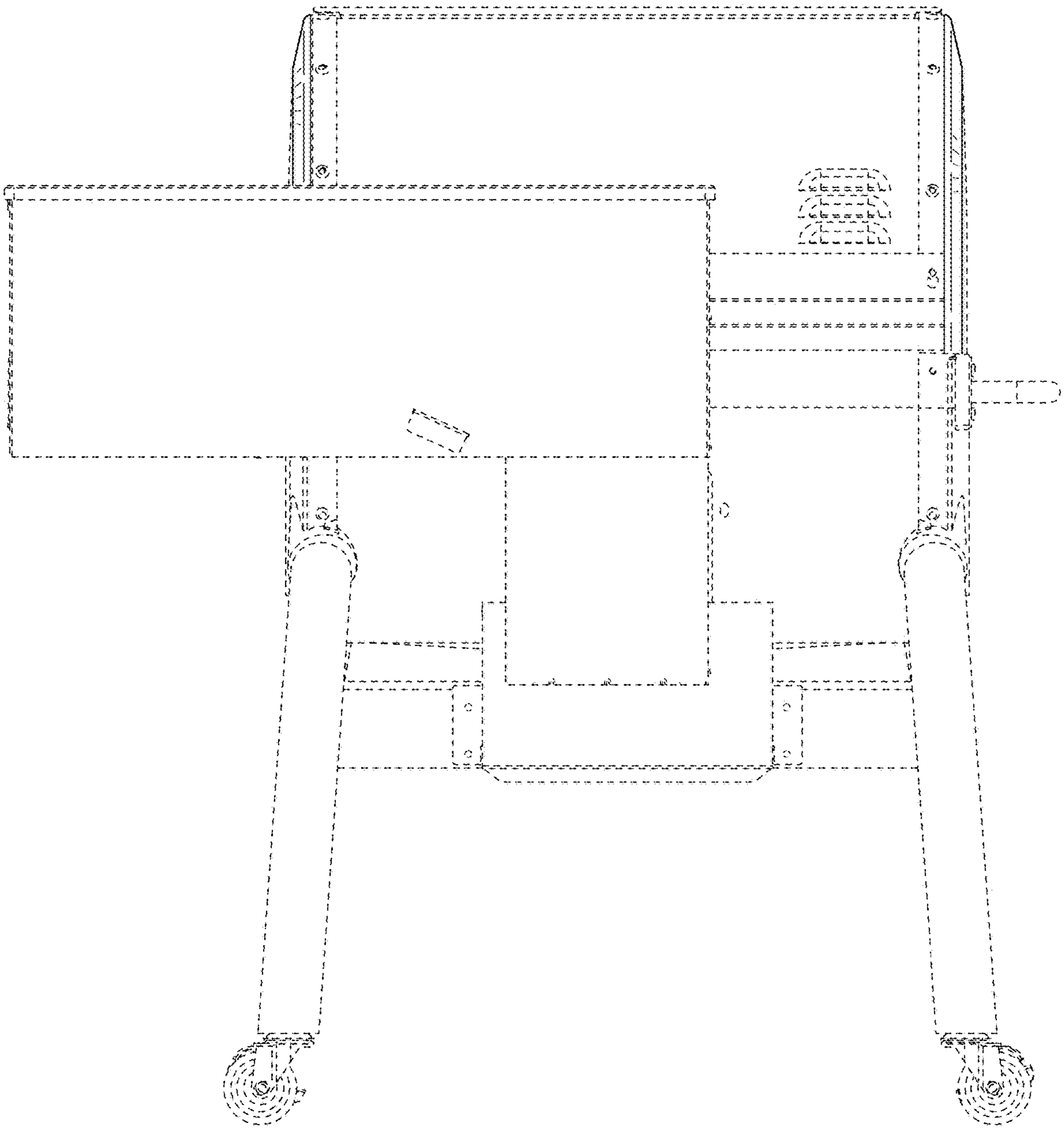

FIG. 5

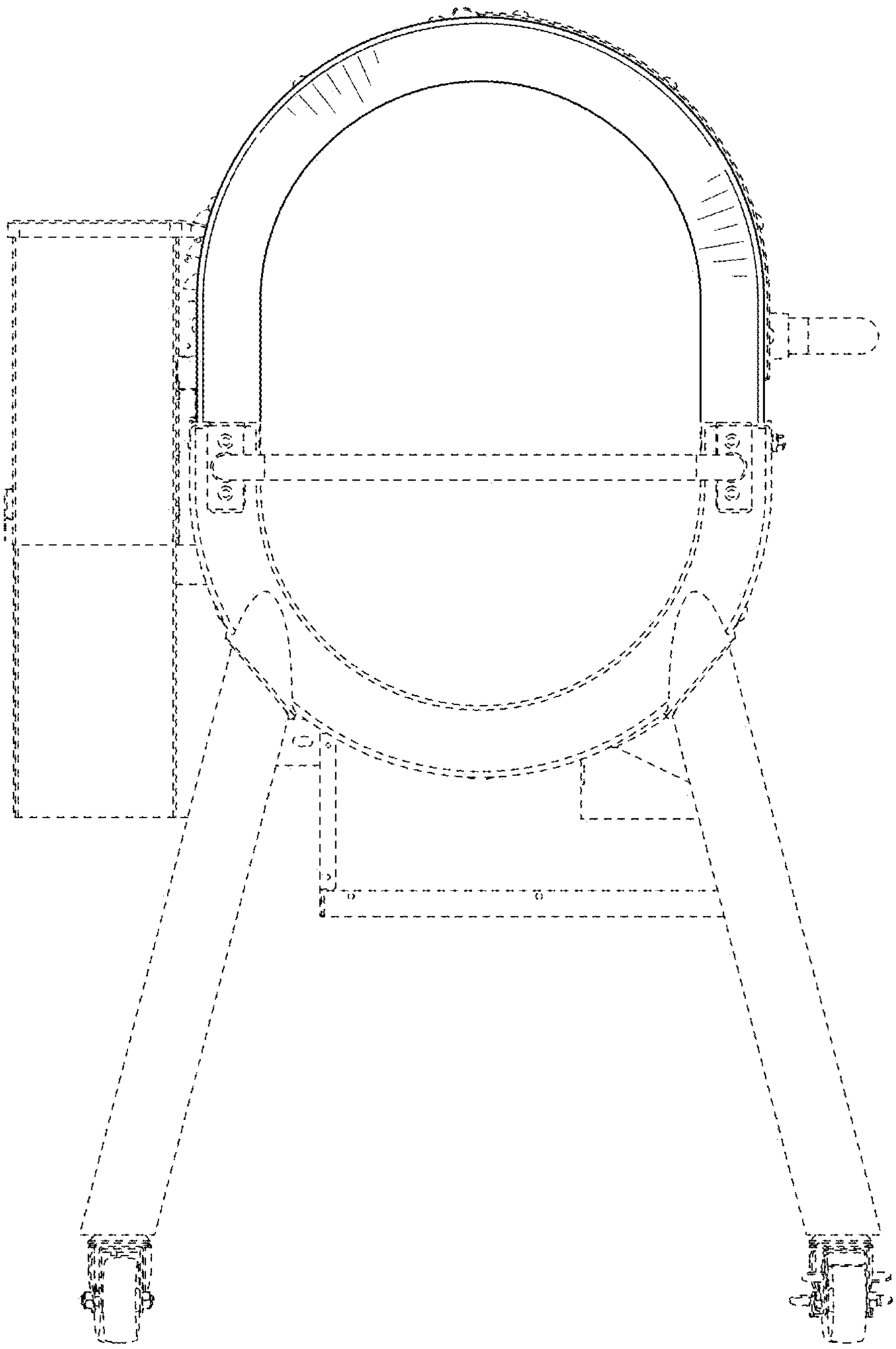

FIG. 6

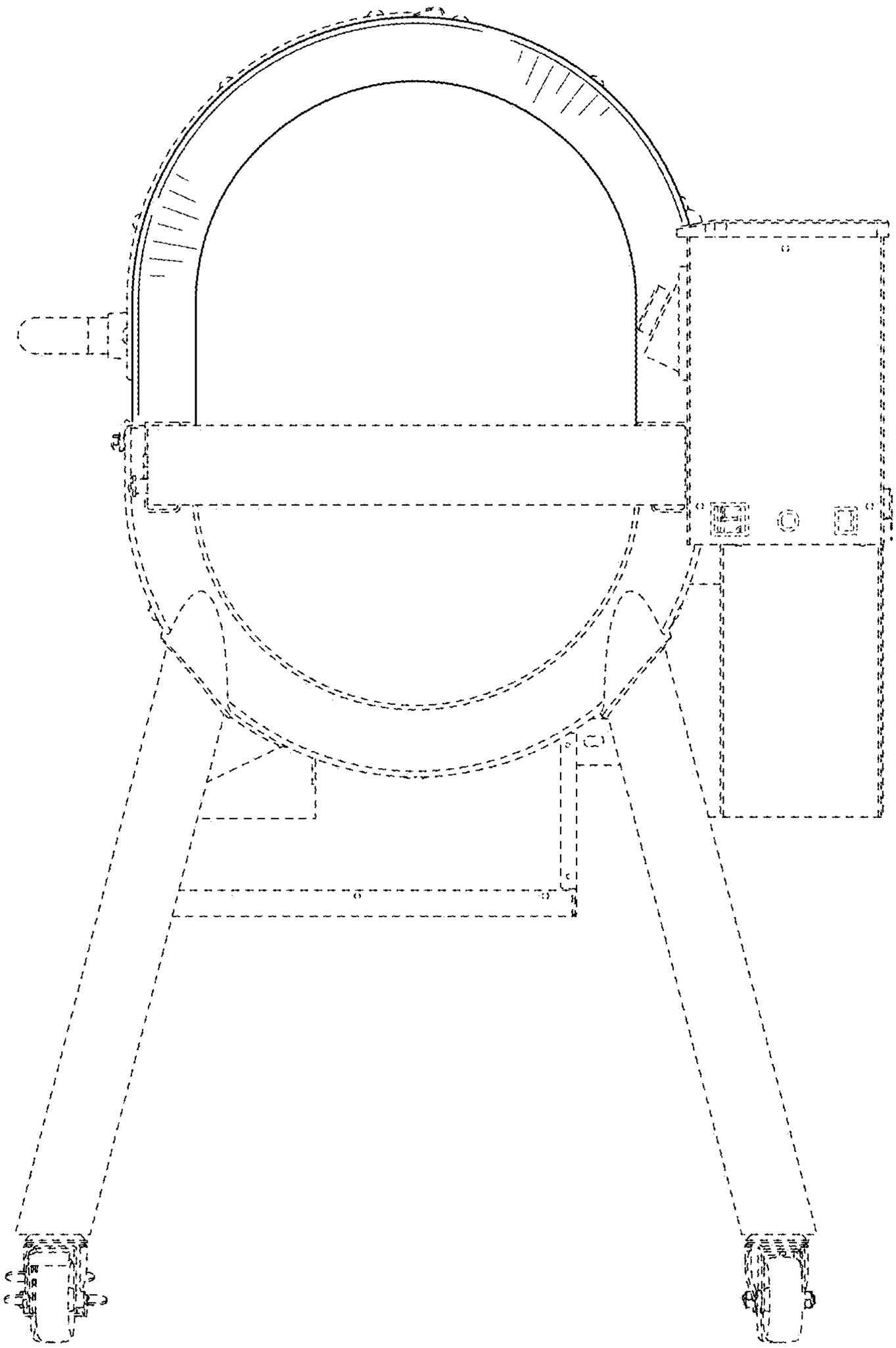

FIG. 7

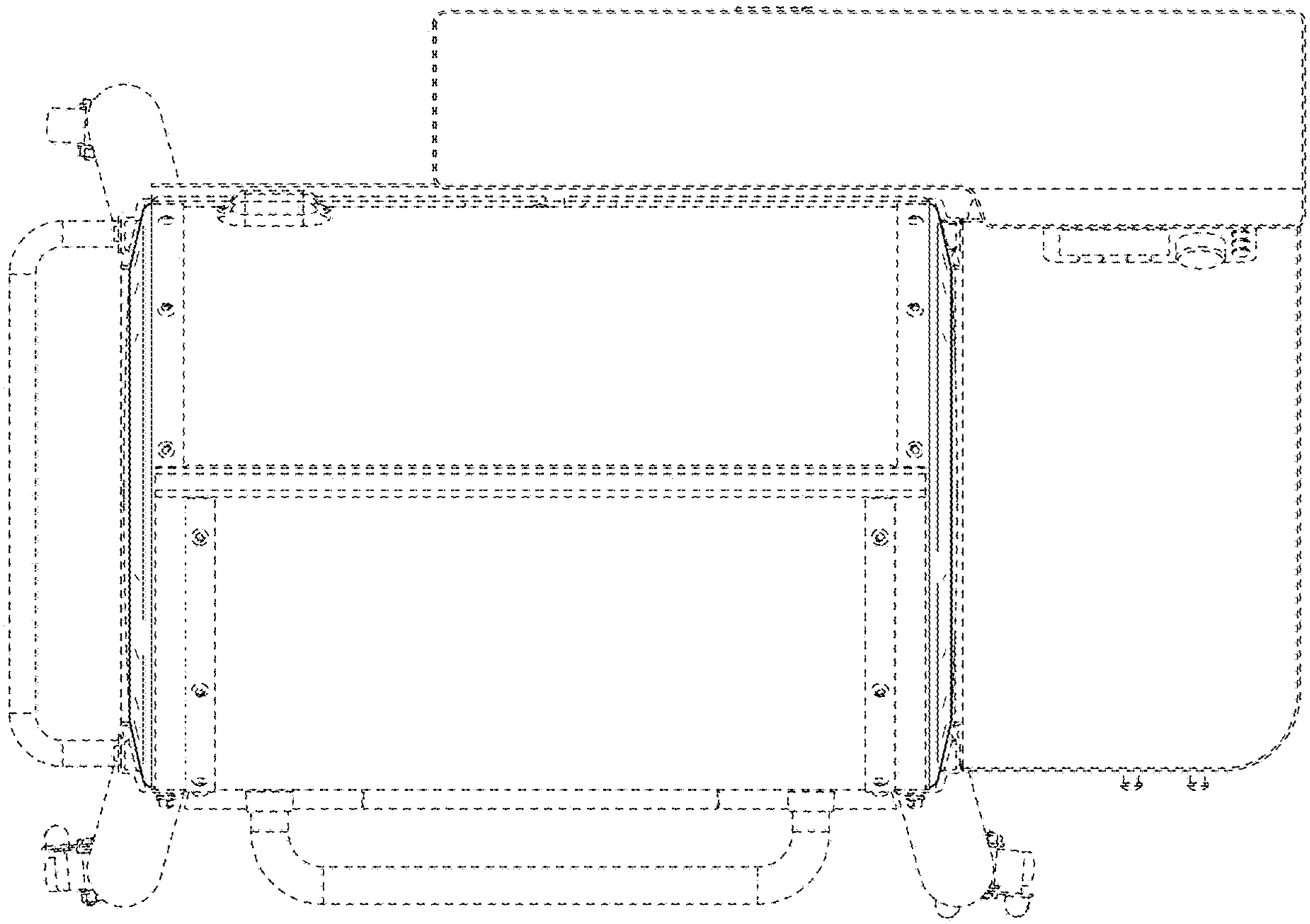

FIG. 8

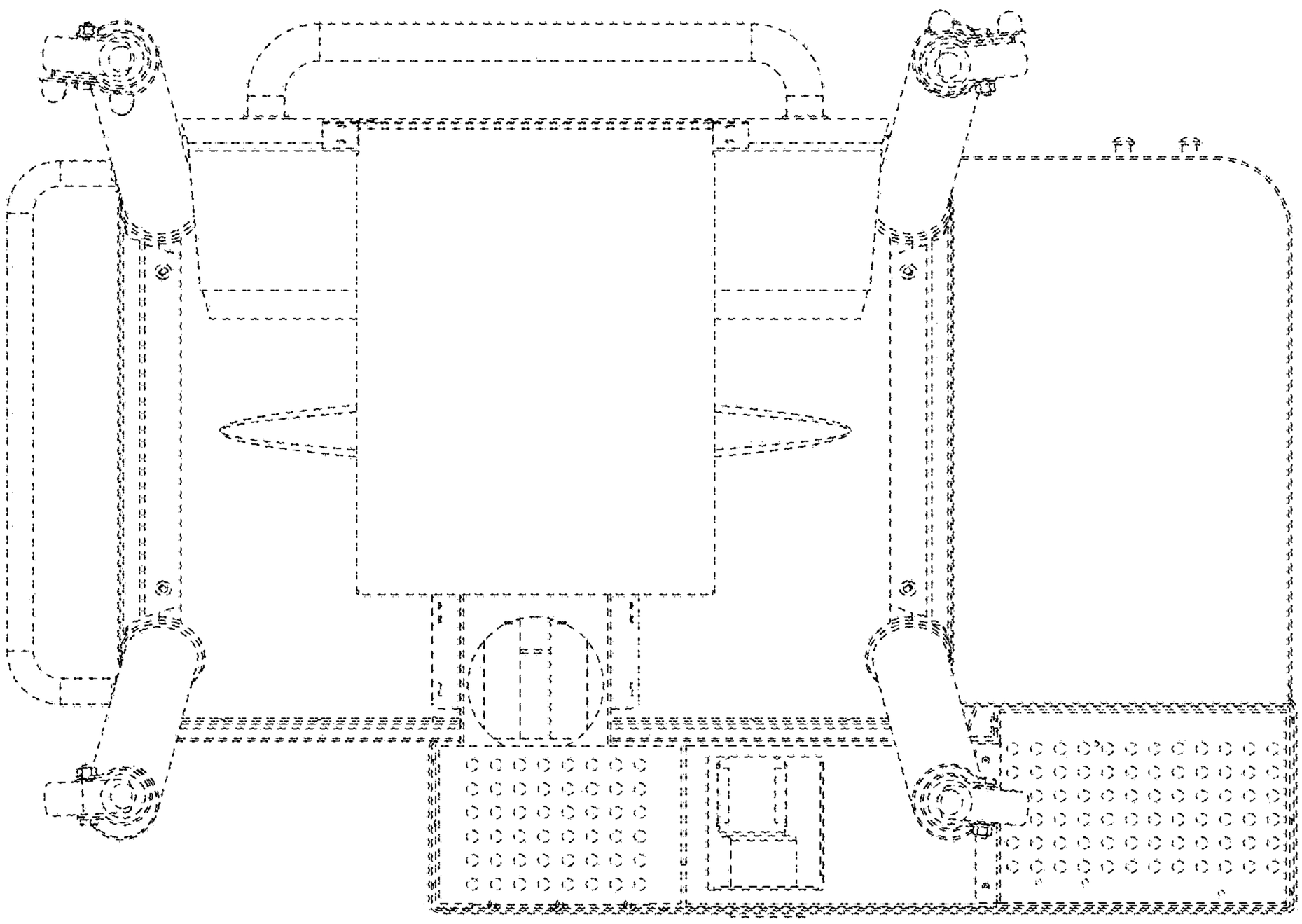

FIG. 9

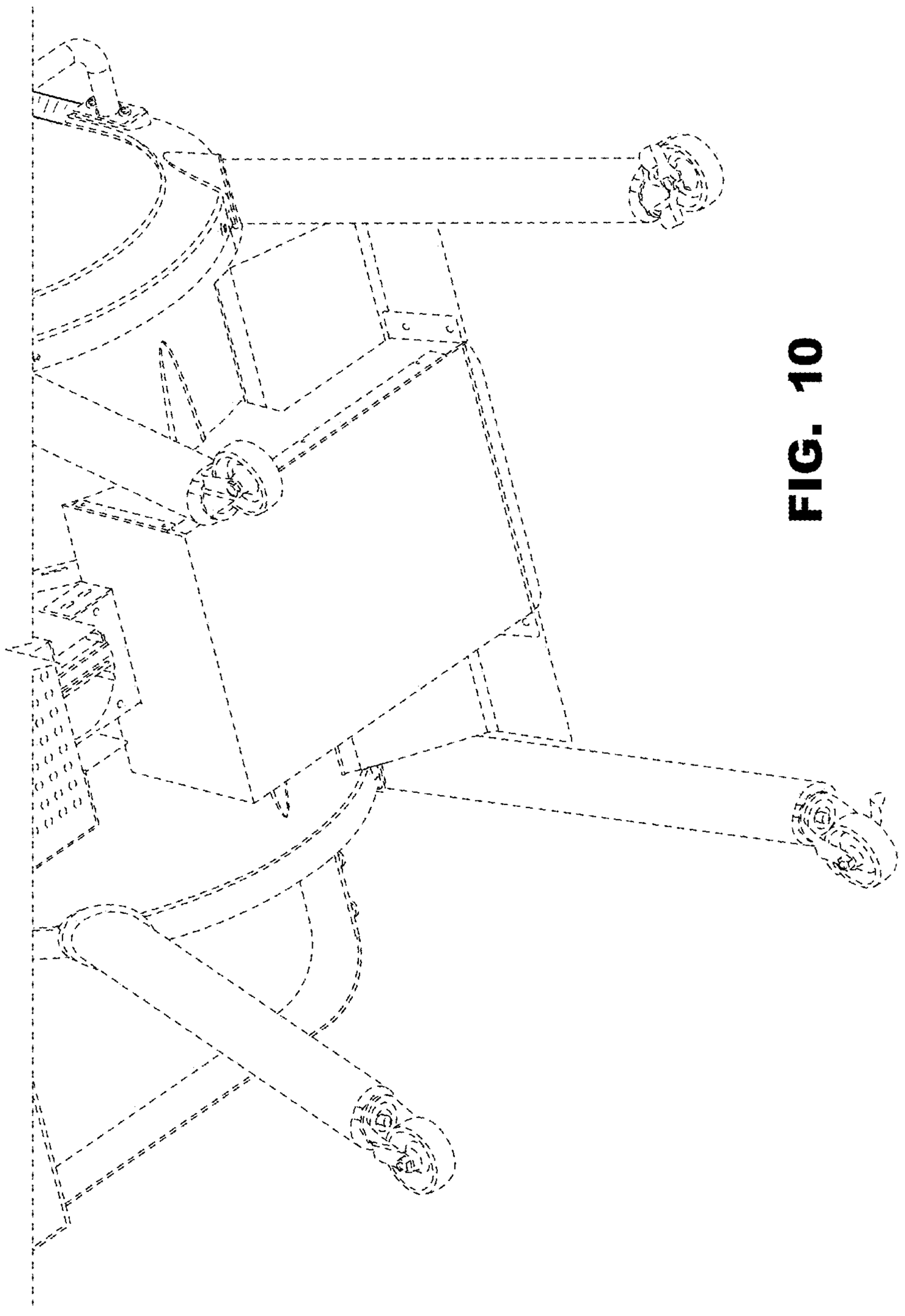

FIG. 10