US00D914946S

(12) United States Design Patent

Siminoff et al.

(10) Patent No.: US D914,946 S
(45) Date of Patent: ** Mar. 30, 2021

(54) **FLOOD LIGHT**

(71) Applicant: **Amazon Technologies, Inc.**, Seattle, WA (US)

(72) Inventors: **Mark Siminoff**, Mountain View, CA (US); **Alexsandra M. Bowers**, Mayfield, OH (US); **Ryan D. Hruska**, North Royalton, OH (US); **Christopher Loew**, Palo Alto, CA (US); **James Siminoff**, Pacific Palisades, CA (US)

(73) Assignee: **Amazon Technologies, Inc.**, Seattle, WA (US)

(**) Term: **15 Years**

(21) Appl. No.: **29/735,251**

(22) Filed: **May 19, 2020**

Related U.S. Application Data

(62) Division of application No. 29/684,398, filed on Mar. 20, 2019, now Pat. No. Des. 888,310.

(51) **LOC (13) Cl.** **26-03**

(52) **U.S. Cl.**
USPC **D26/63**

(58) **Field of Classification Search**
USPC D26/24, 51, 61, 63, 65, 72, 80
CPC F21S 8/04; F21S 8/00; F21V 21/00; F21V 17/02; F21V 14/02; F21V 21/30; F21V 21/14; F21V 21/26; F21W 2131/10
See application file for complete search history.

(56) **References Cited**

U.S. PATENT DOCUMENTS

5,258,899	A	11/1993	Chen	
5,649,761	A	7/1997	Sandell et al.	
D392,065	S *	3/1998	Morrow	D10/106.1
D392,406	S	3/1998	Morrow et al.	
D632,414	S	2/2011	Croce	
D713,578	S	9/2014	Chen	
D713,581	S	9/2014	Chen	
D742,053	S	10/2015	Sussman	
D745,201	S	12/2015	Lee	

(Continued)

FOREIGN PATENT DOCUMENTS

JP	D1385931	4/2010
JP	D1503391	7/2014

(Continued)

OTHER PUBLICATIONS

Taiwanese Office Action dated Apr. 24, 2020 for Taiwanese Patent Application No. 108305696, a counterpart of U.S. Appl. No. 29/684,398, 3 pages.

(Continued)

Primary Examiner — Brian N. Vinson
(74) *Attorney, Agent, or Firm* — Lee & Hayes, P.C.

(57) **CLAIM**

The ornamental design for a flood light, as shown and described.

DESCRIPTION

FIG. **1** is a front, left, bottom perspective view of a flood light according to the present design;
FIG. **2** is a back, right, top perspective view thereof;
FIG. **3** is a front, right, top perspective view thereof;
FIG. **4** is a back, left, bottom perspective view thereof;
FIG. **5** is a front elevation view thereof;
FIG. **6** is a back elevation view thereof;
FIG. **7** is a left-side elevation view thereof;
FIG. **8** is a right-side elevation view thereof;
FIG. **9** is a top plan view thereof; and,
FIG. **10** is a bottom plan view thereof.
The dashed lines depict portions of the flood light that form no part of the claimed design.

1 Claim, 10 Drawing Sheets

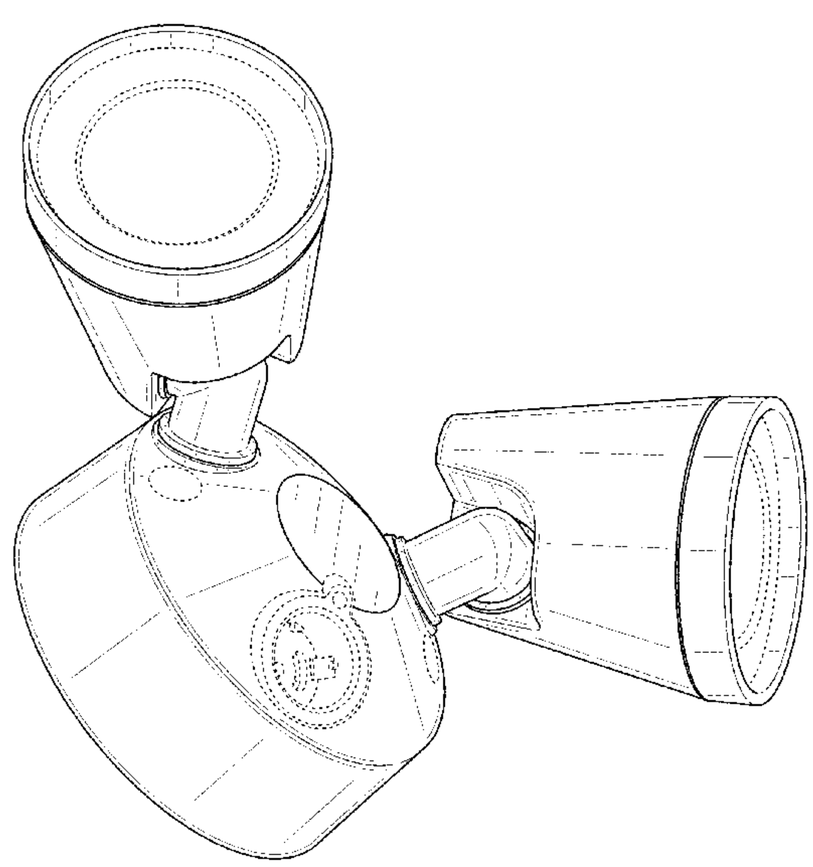

(56) **References Cited**

U.S. PATENT DOCUMENTS

D765,901	S	*	9/2016	Chen	D26/63
D769,499	S		10/2016	Gough	
D810,982	S		2/2018	Liang	
D866,035	S	*	11/2019	Tan	D26/63
D869,038	S	*	12/2019	Recker	D26/63
D869,721	S	*	12/2019	Recker	D26/63
D878,656	S	*	3/2020	Recker	D26/63
D888,310	S	*	6/2020	Siminoff	D26/63
D889,720	S	*	7/2020	Zhu	D26/63
D889,721	S	*	7/2020	Tan	D26/63
D892,379	S	*	8/2020	Recker	D26/63
D894,461	S	*	8/2020	Recker	D26/63
D894,462	S	*	8/2020	Recker	D26/63
D896,424	S	*	9/2020	Wang	D26/63

FOREIGN PATENT DOCUMENTS

TW	D154478	7/2013
TW	D198513	7/2019

OTHER PUBLICATIONS

Taiwanese Office Action dated Apr. 24, 2020 for Taiwanese Patent Application No. 108305697, a counterpart of U.S. Appl. No. 29/684,398, 3 pages.

Taiwanese Office Action dated Apr. 24, 2020 for Taiwanese Patent Application No. 108305698, a counterpart of U.S. Appl. No. 29/684,398, 3 pages.

Taiwanese Office Action dated Apr. 24, 2020 for Taiwanese Patent Application No. 108305699, a counterpart of U.S. Appl. No. 29/684,398, 3 pages.

* cited by examiner

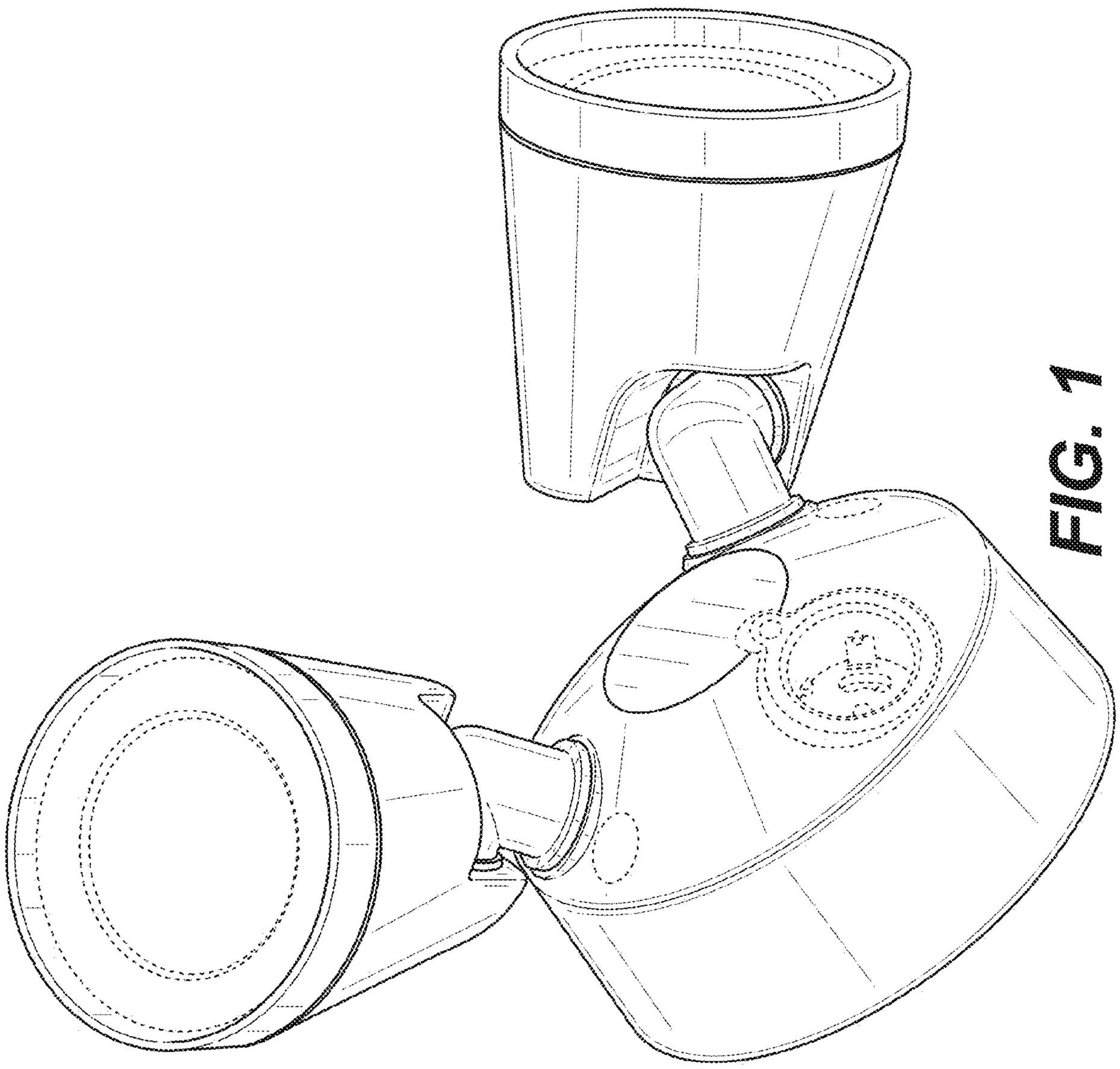

FIG. 1

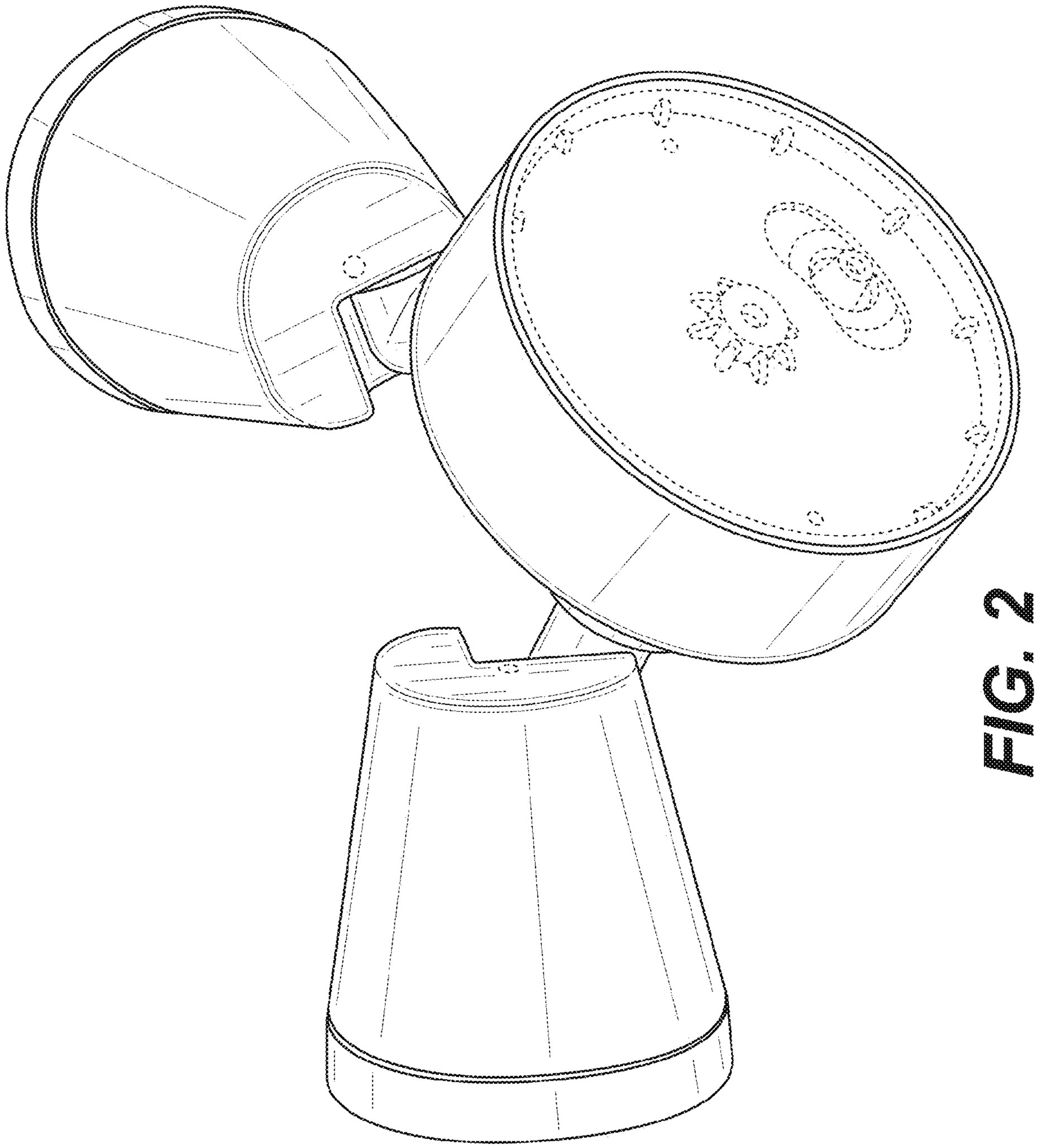

FIG. 2

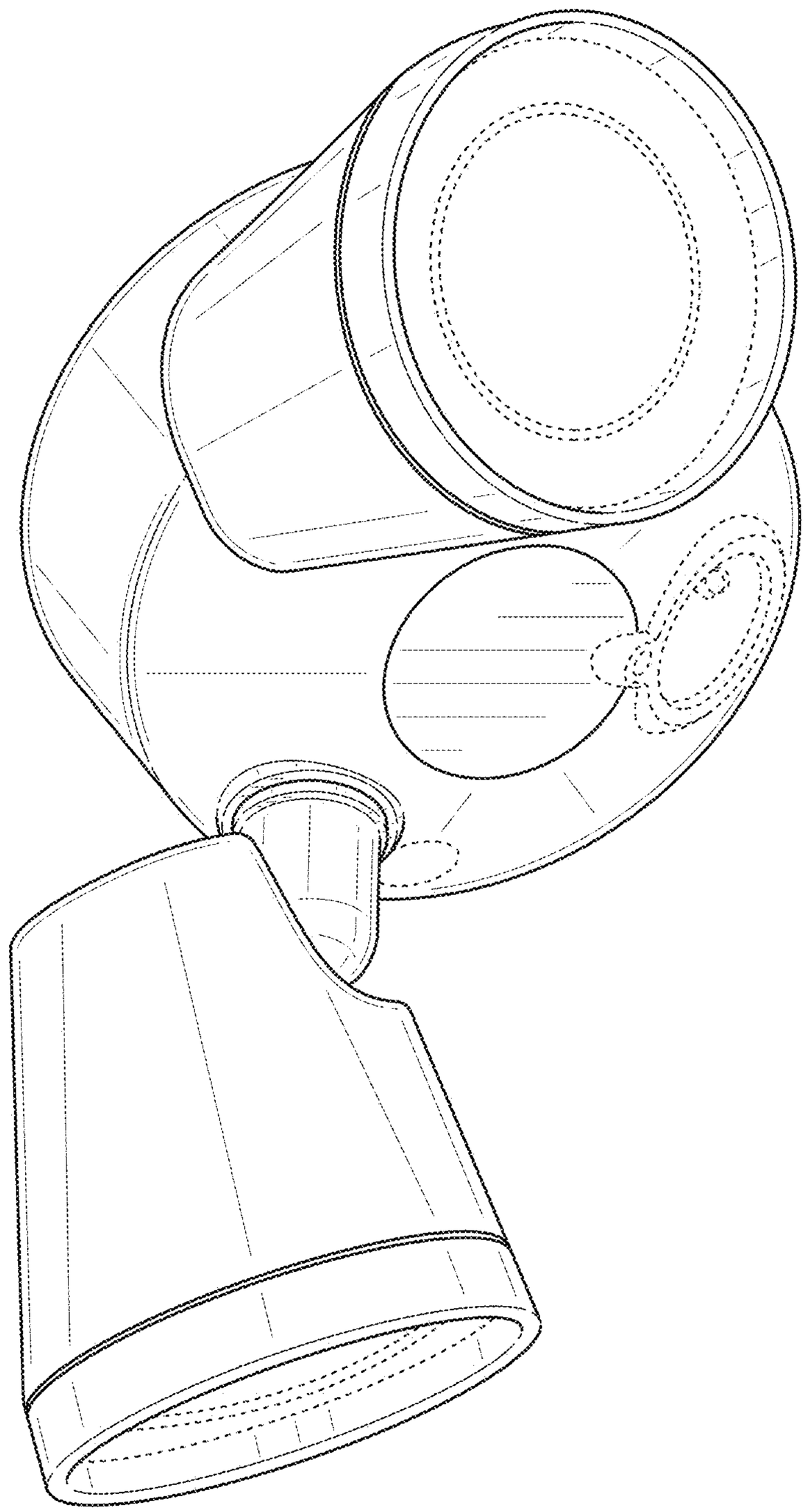

FIG. 3

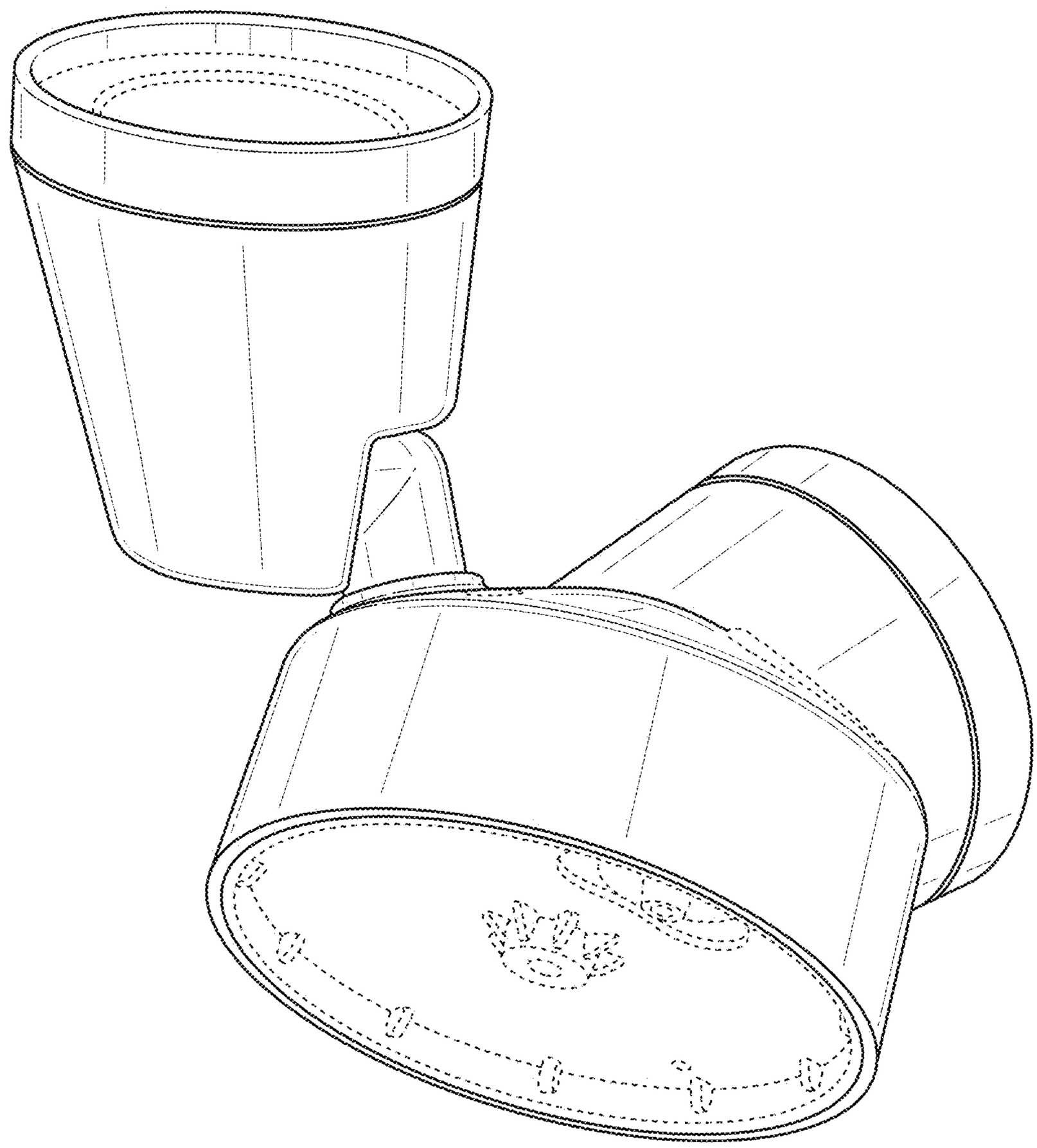

FIG. 4

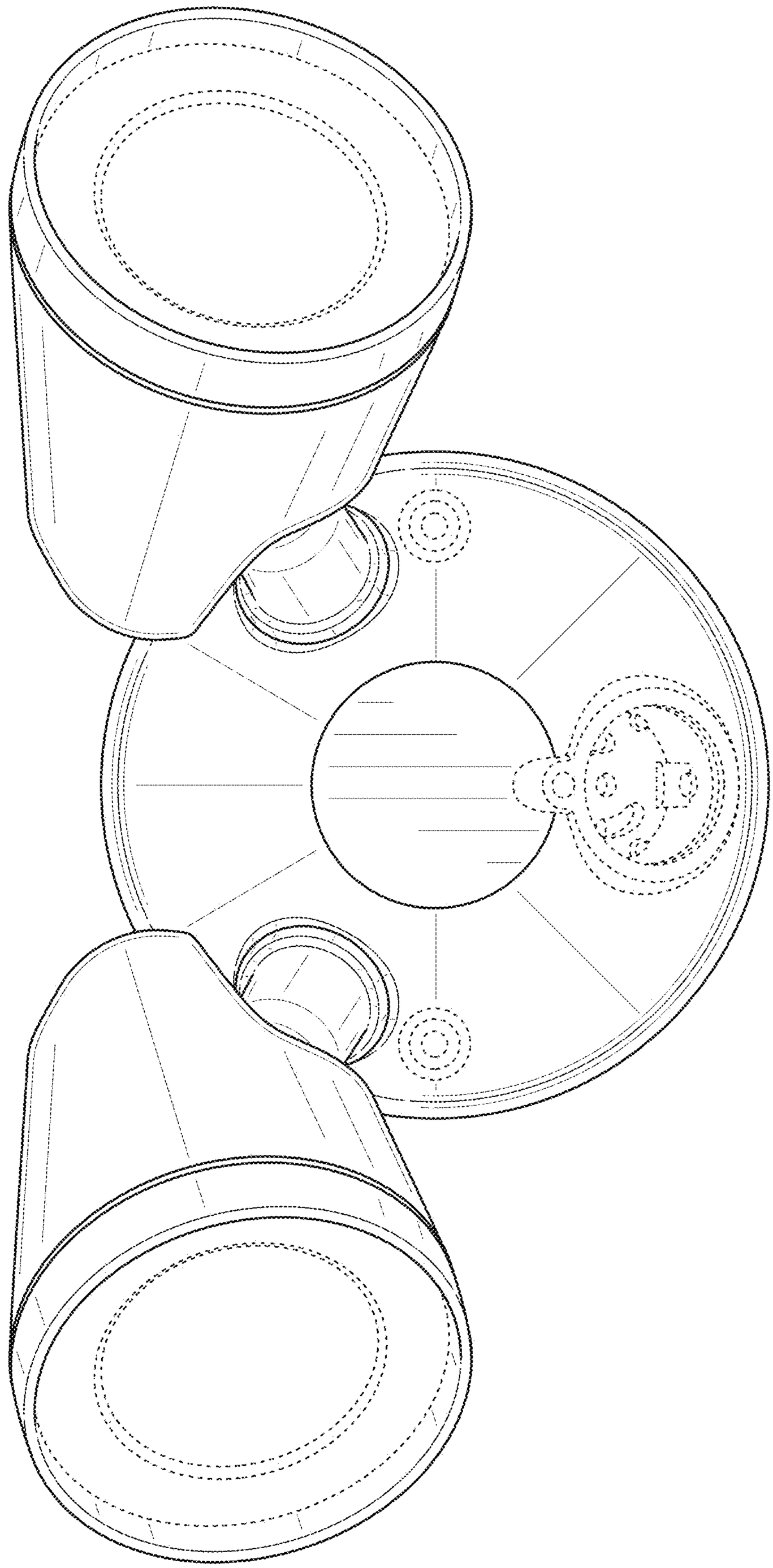

FIG. 5

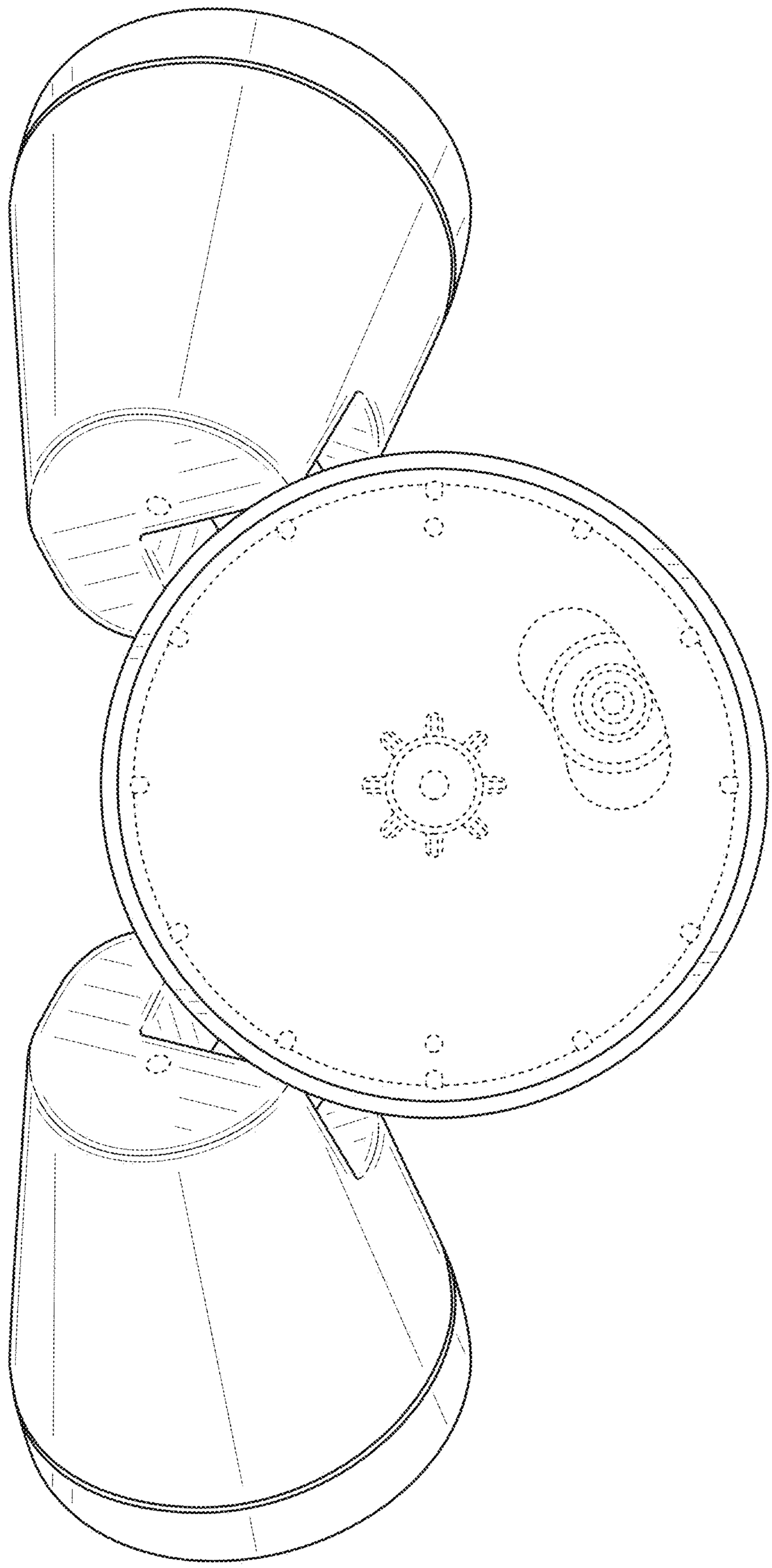

FIG. 6

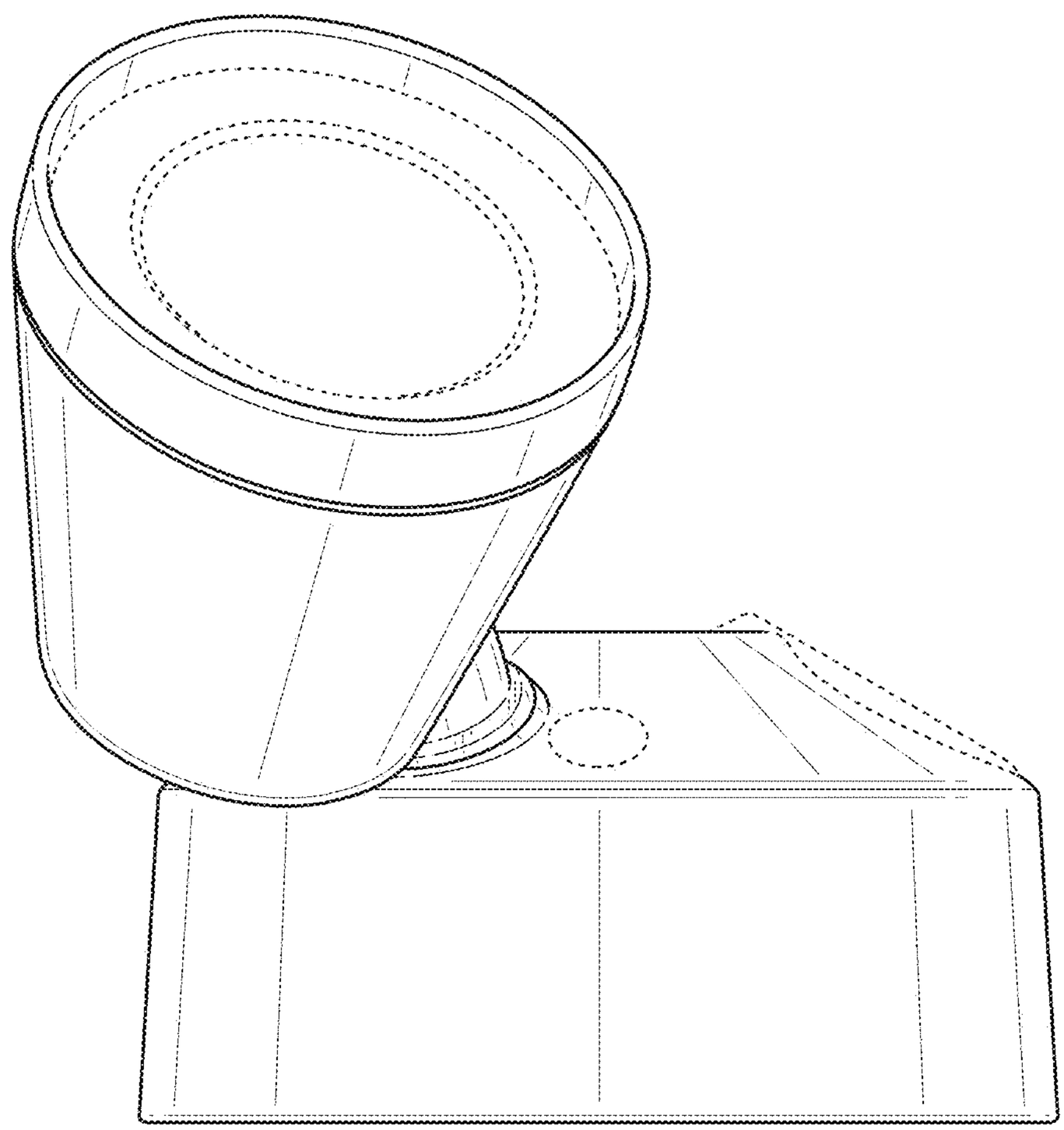

FIG. 7

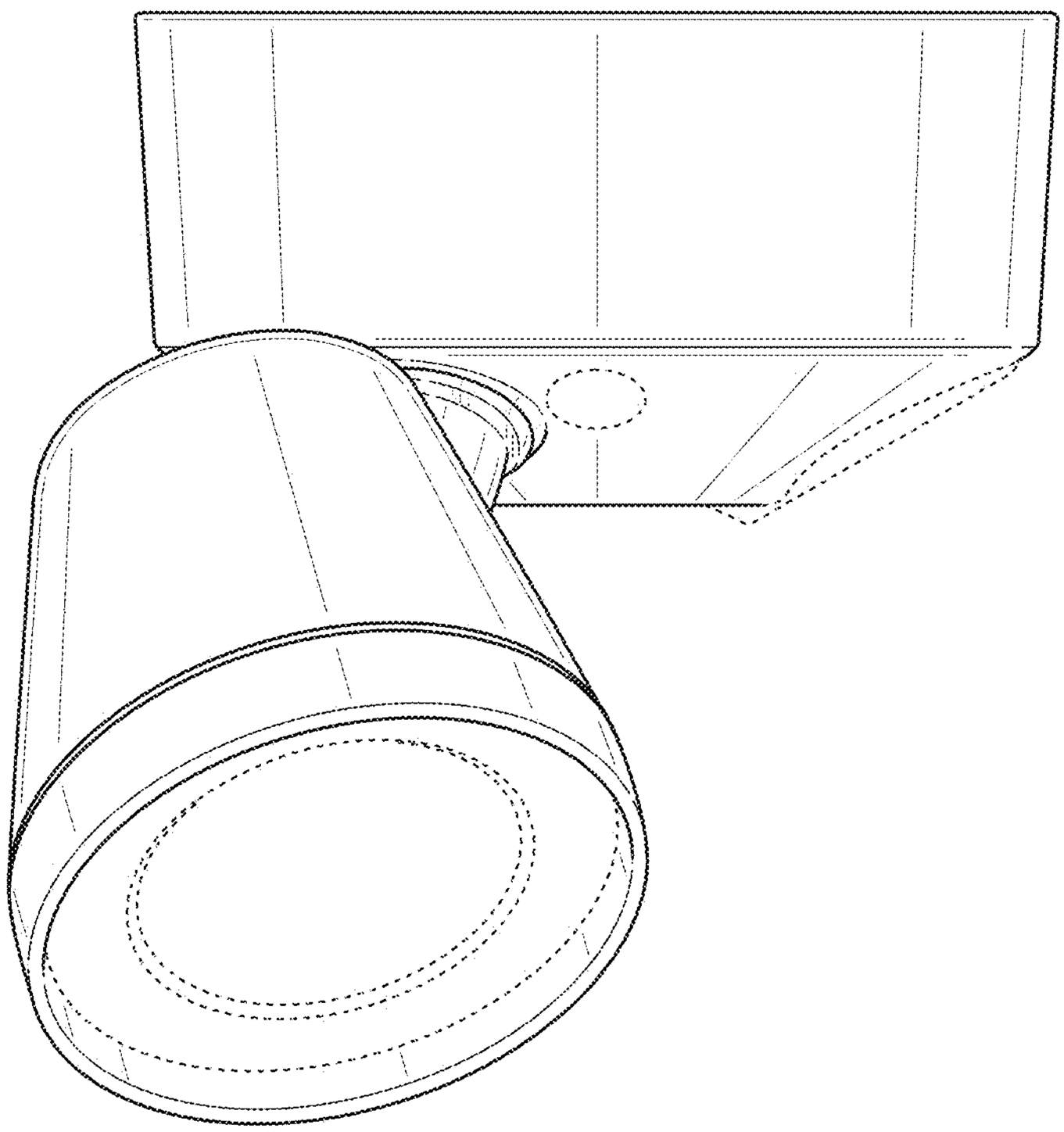

FIG. 8

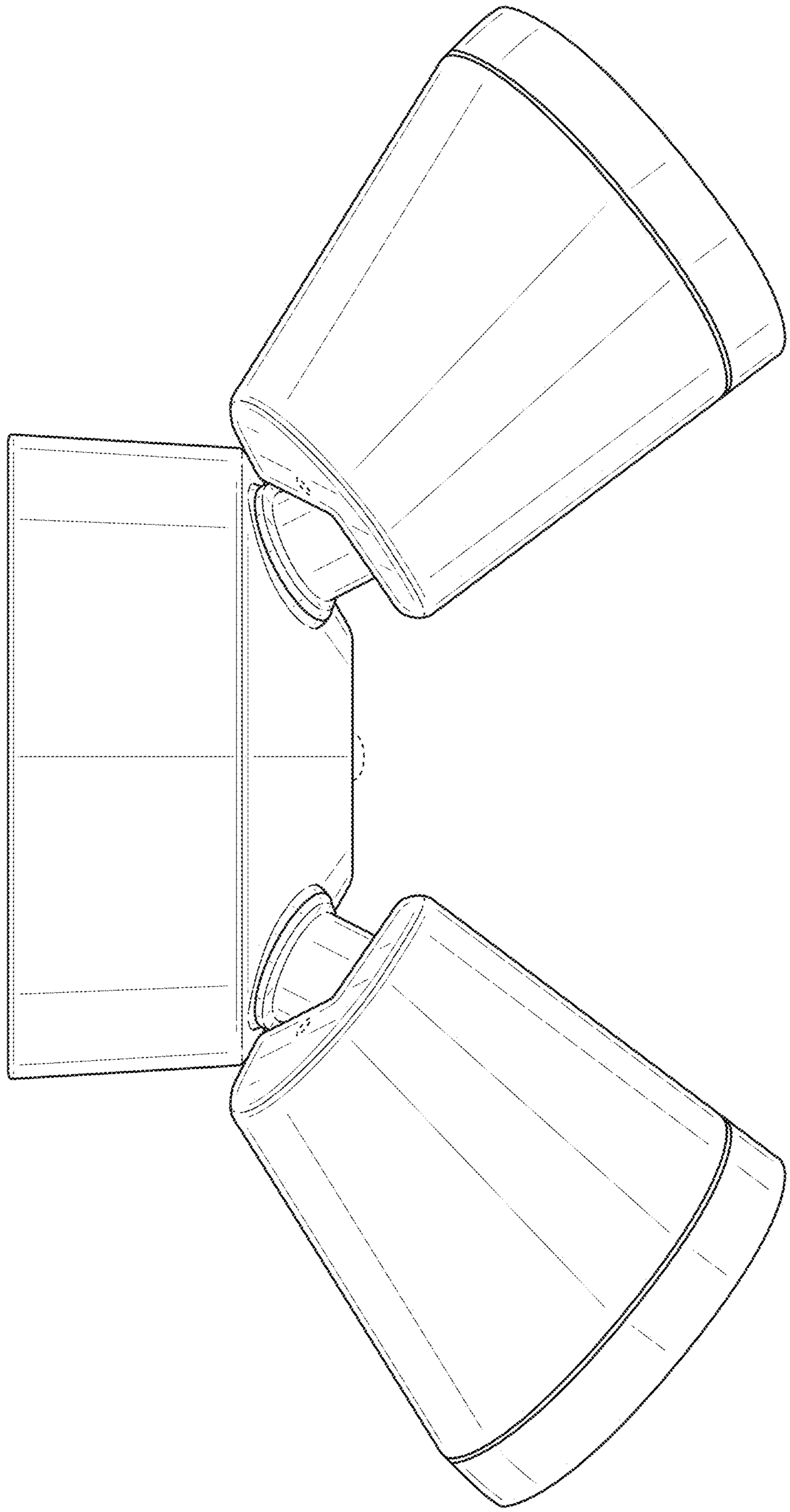

FIG. 9

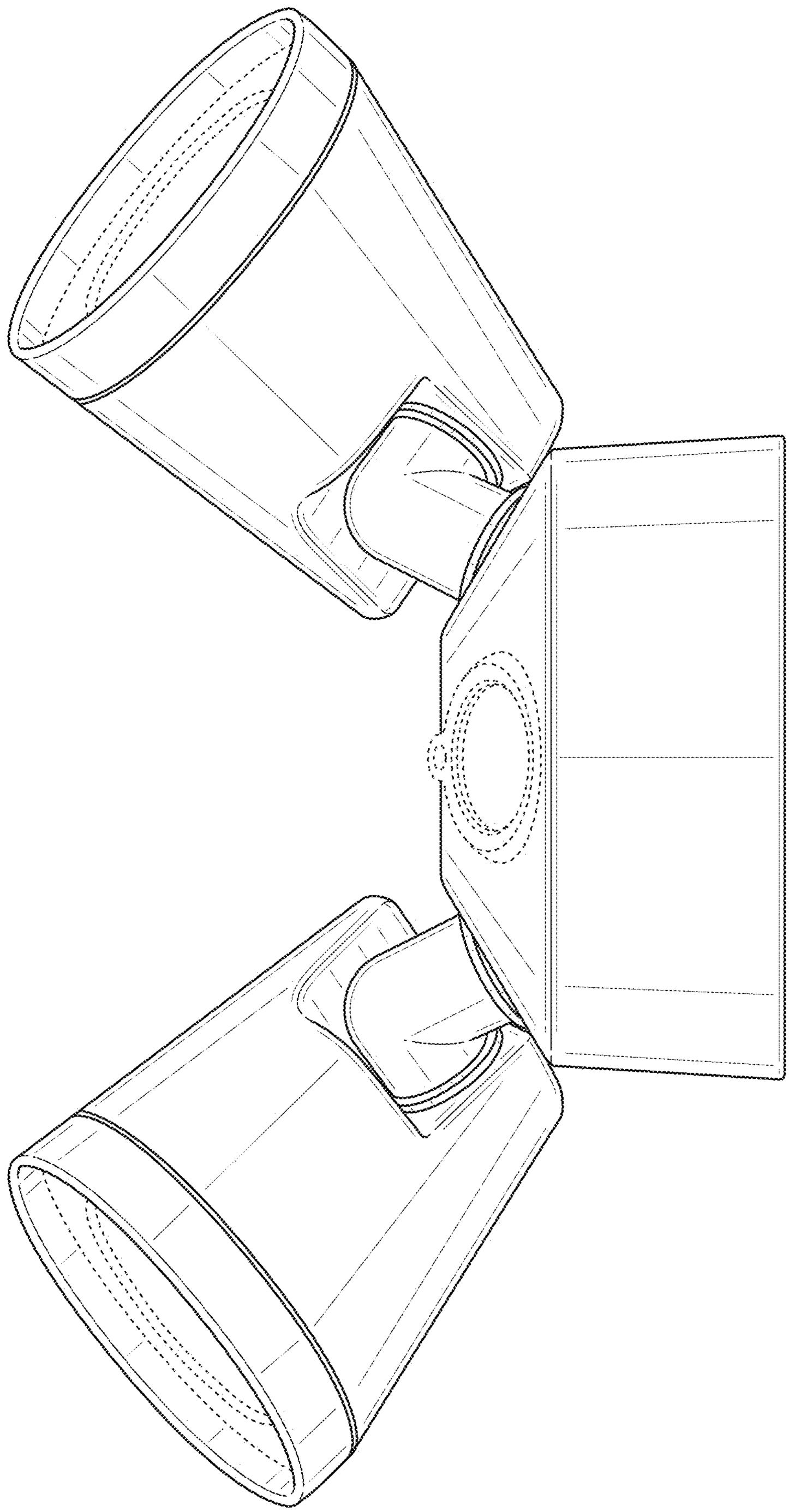

FIG. 10