US00D914612S

(12) United States Design Patent

Andersson et al.

(10) Patent No.: US D914,612 S
(45) Date of Patent: ** Mar. 30, 2021

(54) **ELECTRICAL JUNCTION BOX FOR MOTOR DIAGNOSIS**

(71) Applicant: **SIEMENS AKTIENGESELLSCHAFT**, Munich (DE)

(72) Inventors: **Jan Andersson**, Erlangen (DE); **Stephan Hühne**, Wilhermsdorf (DE); **Matthias Manger**, Fürth (DE); **Michael Weigand**, Roth (DE)

(73) Assignee: **SIEMENS AKTIENGESELLSCHAFT**, Munich (DE)

(**) Term: **15 Years**

(21) Appl. No.: **29/645,151**

(22) Filed: **Apr. 24, 2018**

(30) **Foreign Application Priority Data**

Oct. 25, 2017 (EM) 004420271

(51) **LOC (13) Cl.** **13-03**

(52) **U.S. Cl.**
USPC **D13/152**

(58) **Field of Classification Search**
USPC D13/103, 107, 108, 110, 133, D13/137.1–137.4, 138.1–138.2, D13/139.1–139.8, 146, 147, 151–156, D13/173, 177, 199; D14/432, 433, 435.1, D14/250; D23/231, 232; D15/7–9; D8/350, 353–356
CPC H01R 11/00; H01R 9/00; H01R 13/00; H01R 13/04; H01R 13/10; H01R 13/6666; H01R 13/6675; H01R 25/00; H01R 25/006; H01H 2207/00; H01H 2207/022; Y02E 60/12; Y02E 60/122; Y02E 60/124; Y02E 60/50; H01M 2/02; H01M 2/022; H01M 2/0202; H01M 2/0207; H01M 2/0212; H01M 2/1061; H01M 2/1022; H01M 2/1055; H01M 2/1066; H01M 2/105; H01M 2/204; H02J 7/00; H02J 7/0003; H02J 7/0011; H02J 7/0013; H02J 7/0054; H02J 7/0055; H02J 7/0057; Y02T 10/7005; Y02T 10/705; Y02T 10/7088; B60L 11/1809; B60L 11/1861
See application file for complete search history.

(56) **References Cited**

U.S. PATENT DOCUMENTS

D700,136 S * 2/2014 Morris D13/103
D735,198 S * 7/2015 Song D14/432
D745,010 S * 12/2015 Kim D14/433
D793,958 S * 8/2017 Rautiainen D13/108
D795,182 S * 8/2017 Akana D13/108
D797,671 S * 9/2017 Andersson D13/122
D826,151 S * 8/2018 Akana D13/108
D832,208 S * 10/2018 Grois D13/108
(Continued)

Primary Examiner — Christy Nemeth
(74) *Attorney, Agent, or Firm* — Henry M. Feiereisen LLC

(57) **CLAIM**

The ornamental design for an electrical junction box for motor diagnosis, as shown and described.

DESCRIPTION

FIG. **1** is a front elevation view of an electrical junction box for motor diagnosis;
FIG. **2** is a rear elevation view thereof;
FIG. **3** is a top plan view thereof;
FIG. **4** is a bottom plan view thereof;
FIG. **5** is a left side elevation view thereof;
FIG. **6** is a right side elevation view thereof; and,
FIG. **7** is a front, top, left side perspective view thereof.
The broken lines depict portions of the electrical junction box for motor diagnosis that form no part of the claim.

1 Claim, 7 Drawing Sheets

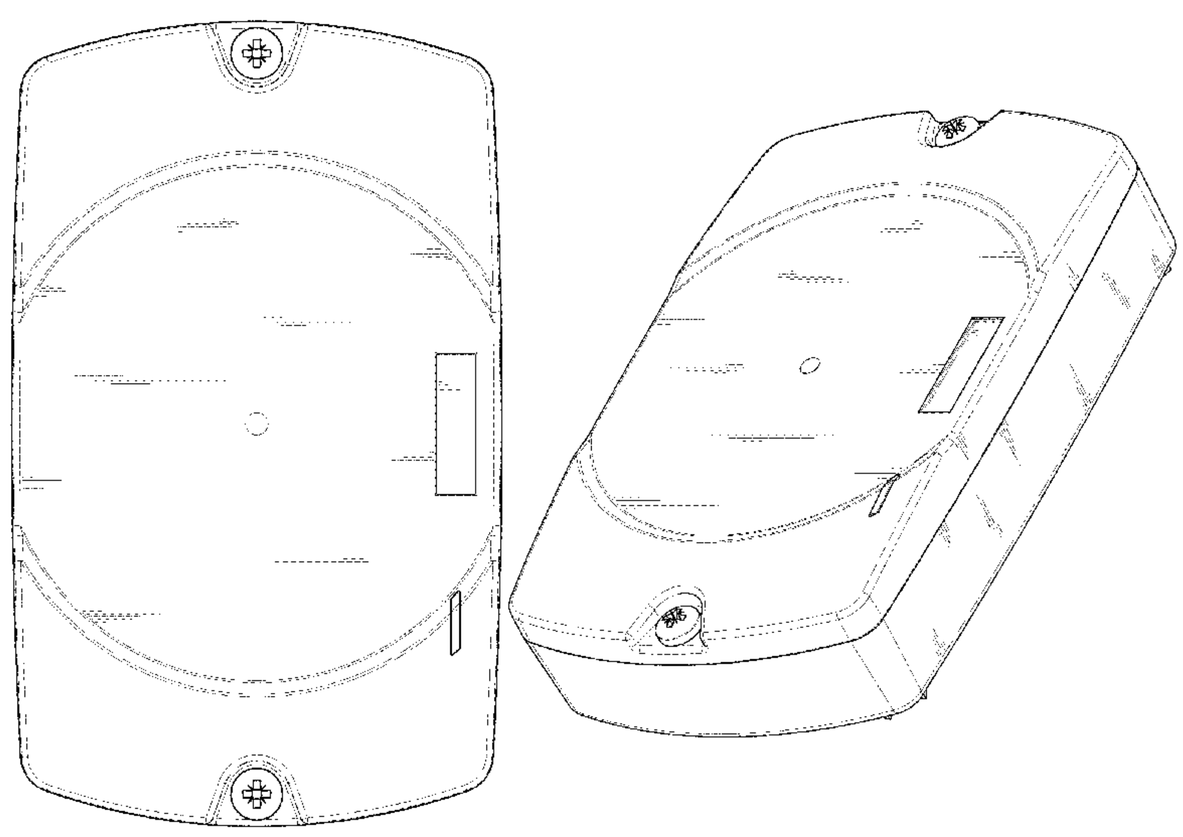

(56) **References Cited**

U.S. PATENT DOCUMENTS

D863,226 S * 10/2019 Andersson D13/152
D864,145 S * 10/2019 Zhang D14/155

* cited by examiner

FIG.1

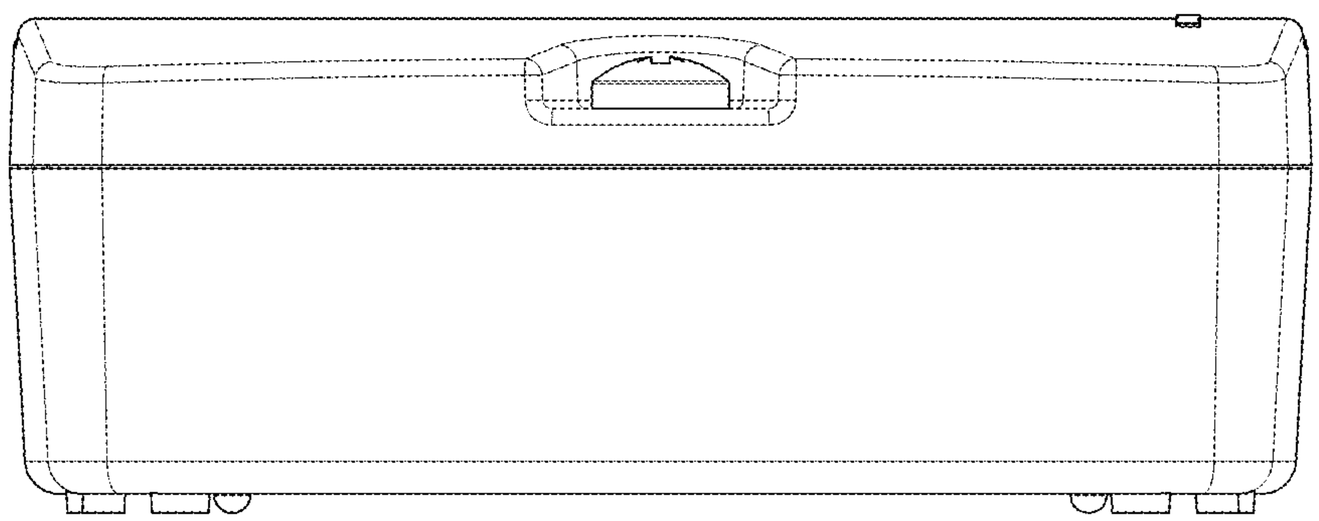

FIG.2

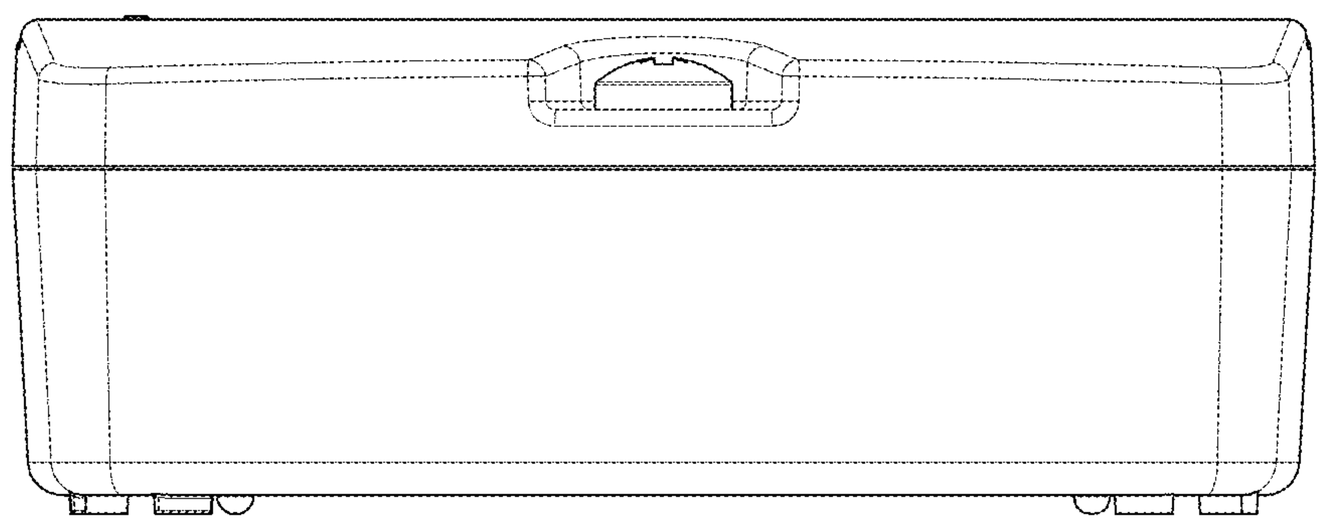

FIG.3

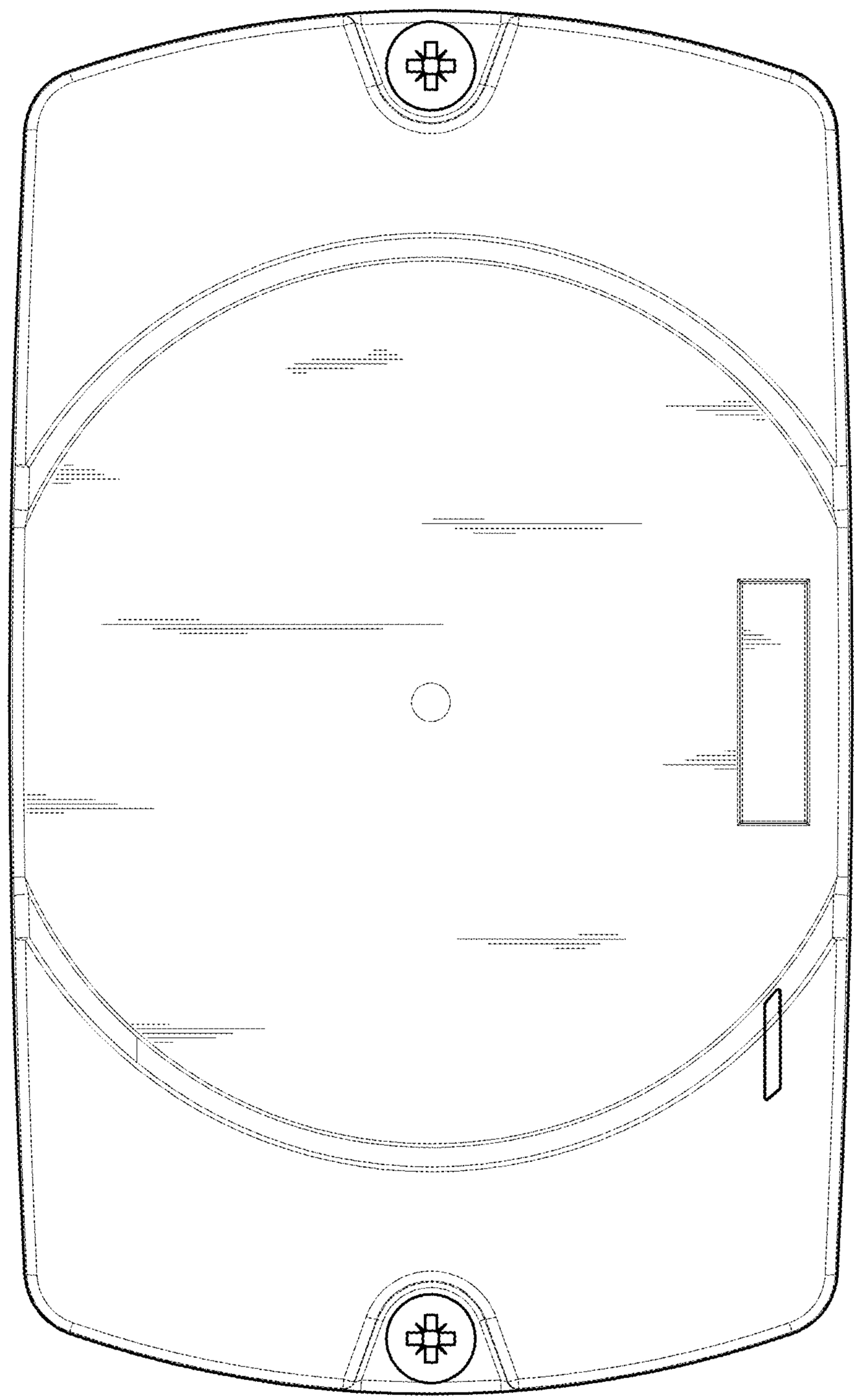

FIG. 4

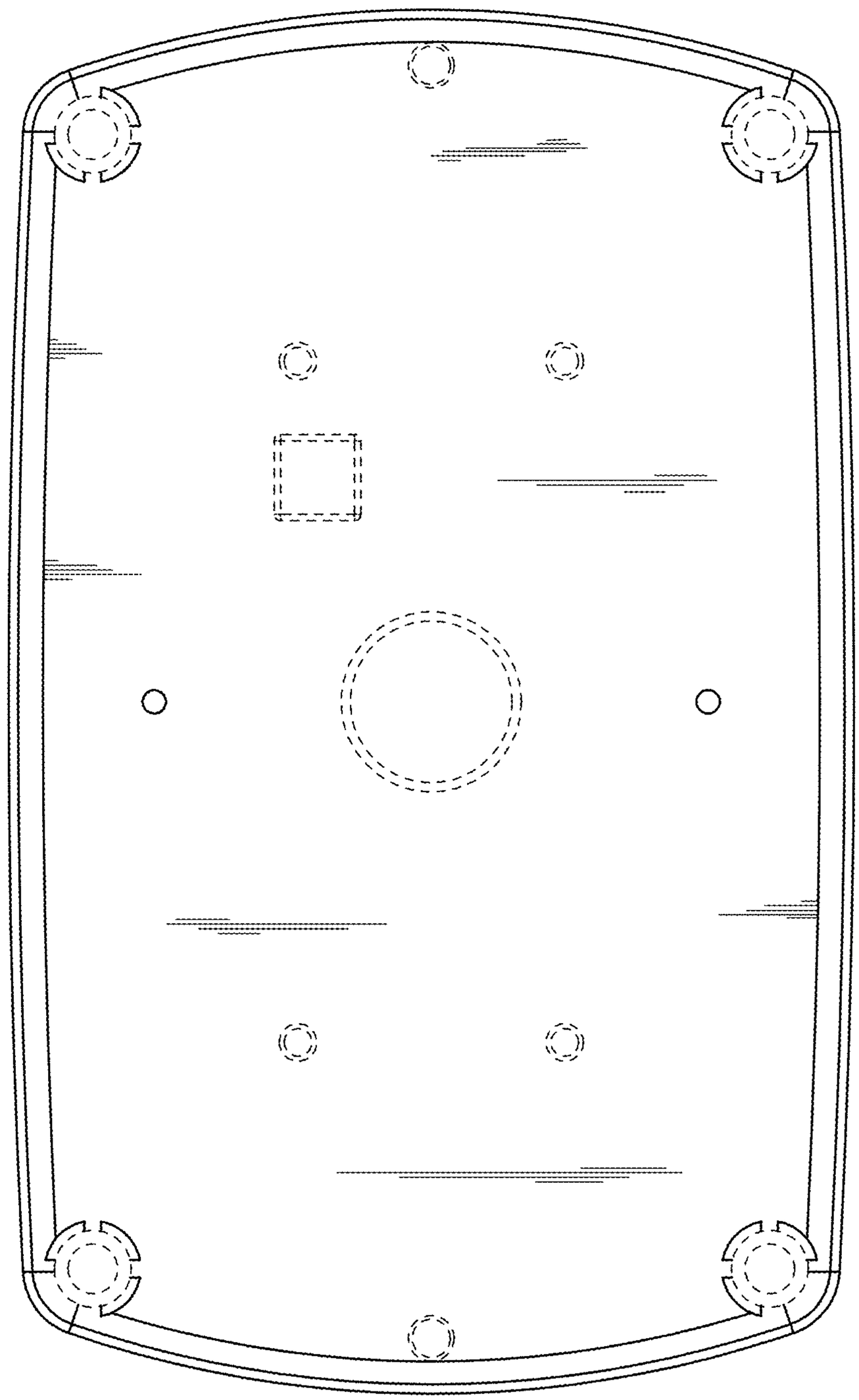

FIG.5

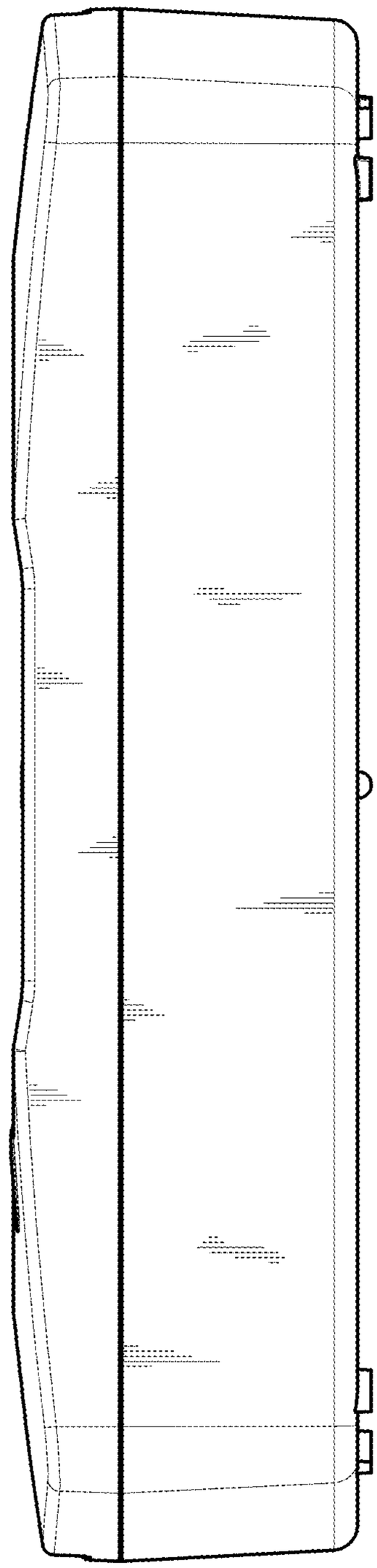

FIG.6

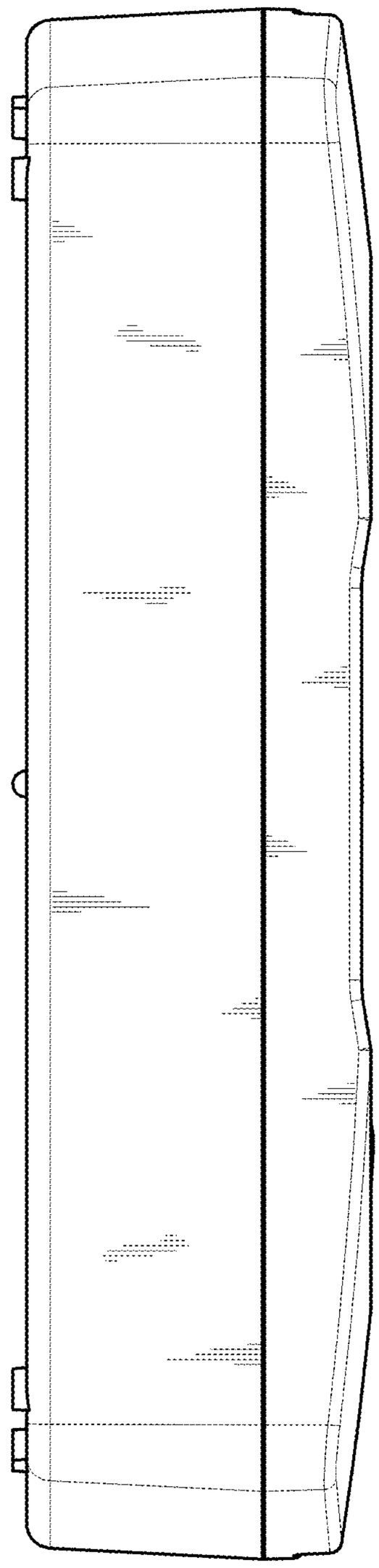
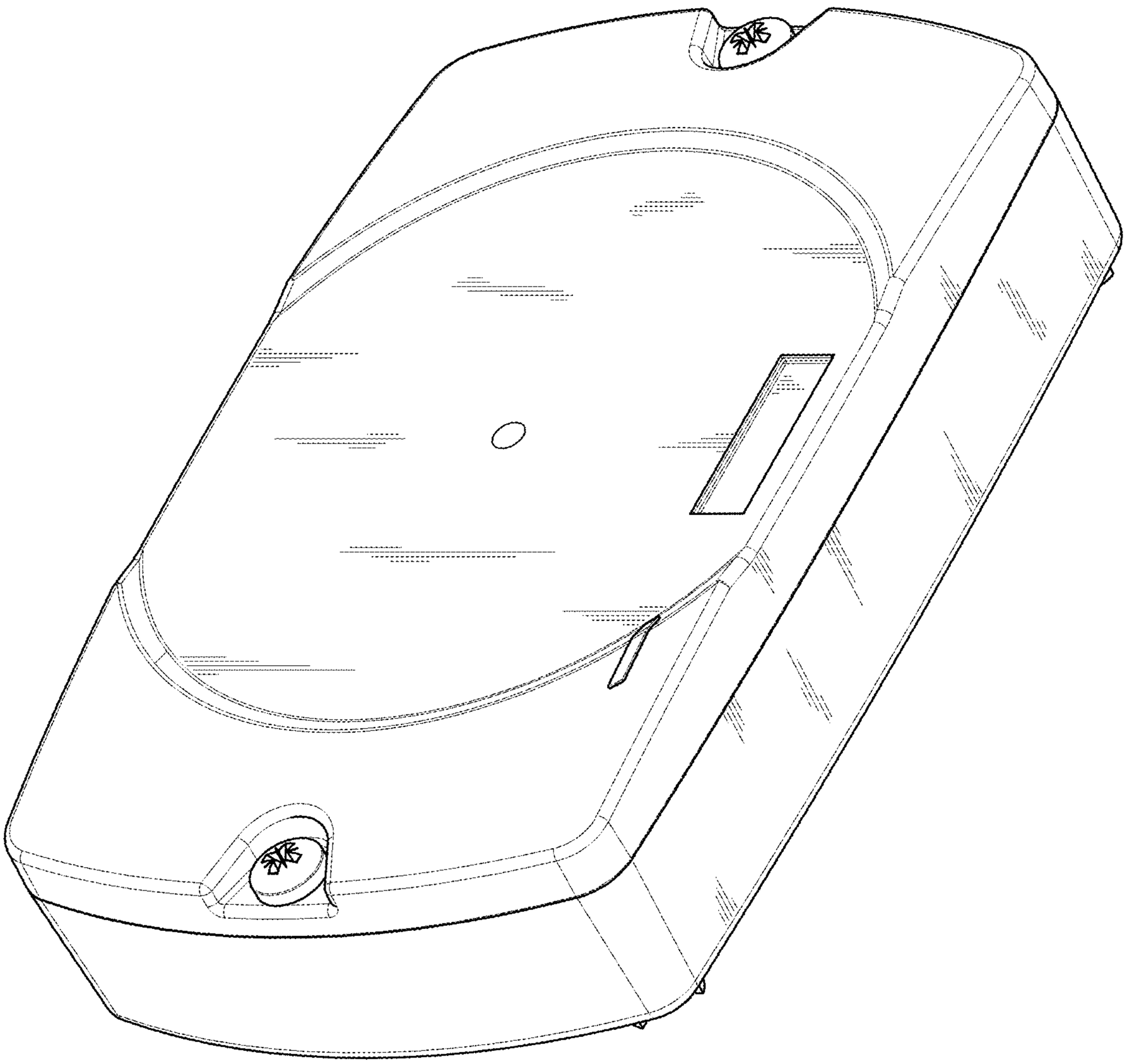
FIG.7