US00D914559S

(12) United States Design Patent

Marling

(10) Patent No.: US D914,559 S
(45) Date of Patent: ** Mar. 30, 2021

(54) **WIND FAIRING**

(71) Applicant: **Wabash National, L.P.**, Lafayette, IN (US)

(72) Inventor: **Timothy Marling**, Granger, IN (US)

(73) Assignee: **Wabash National, L.P.**, Lafayette, IN (US)

(**) Term: **15 Years**

(21) Appl. No.: **29/699,279**

(22) Filed: **Jul. 24, 2019**

(51) **LOC (13) Cl.** **12-16**

(52) **U.S. Cl.**
USPC **D12/181**

(58) **Field of Classification Search**
USPC D12/181, 182, 183, 184, 191, 400
(Continued)

(56) **References Cited**

U.S. PATENT DOCUMENTS

D600,606 S * 9/2009 Lamm D12/169
D710,773 S * 8/2014 Ito D12/181
(Continued)

Primary Examiner — Katrina A Betton
(74) *Attorney, Agent, or Firm* — Quarles & Brady LLP

(57) **CLAIM**

The ornamental design for a wind fairing, as shown and described.

DESCRIPTION

FIG. **1** is an isometric view of a front, top, and left side of one embodiment of an ornamental design of a wind fairing;
FIG. **2** is a front elevational view of the wind fairing of FIG. **1**;
FIG. **3** is a top plan view of the wind fairing of FIG. **1**;
FIG. **4** is a left side elevational view of the wind fairing of FIG. **1**;
FIG. **5** is a right side elevational view of the wind fairing of FIG. **1**;
FIG. **6** is an isometric view of a front, top, and left side of the embodiment of FIG. **1** with environmental structure removed for clarity;
FIG. **7** is a front elevational view of the wind fairing of FIG. **6**;
FIG. **8** is a rear elevational view of the wind fairing of FIG. **6**;
FIG. **9** is a top plan view of the wind fairing of FIG. **6**;
FIG. **10** is a bottom plan view of the wind fairing of FIG. **6**;
FIG. **11** is a left side elevational view of the wind fairing of FIG. **6**;
FIG. **12** is a right side elevational view of the wind fairing of FIG. **6**;
FIG. **13** is an isometric view of a front, top, and left side of another embodiment of an ornamental design of a wind fairing;
FIG. **14** is a front elevational view of the wind fairing of FIG. **13**;
FIG. **15** is a top plan view of the wind fairing of FIG. **13**;
FIG. **16** is a left side elevational view of the wind fairing of FIG. **13**;
FIG. **17** is a right side elevational view of the wind fairing of FIG. **13**;
FIG. **18** is an isometric view of a front, top, and left side of the embodiment of FIG. **13** with environmental structure removed for clarity;
FIG. **19** is a front elevational view of the wind fairing of FIG. **18**;
FIG. **20** is a rear elevational view of the wind fairing of FIG. **18**;
FIG. **21** is a top plan view of the wind fairing of FIG. **18**;
FIG. **22** is a bottom plan view of the wind fairing of FIG. **18**;
FIG. **23** is a left side elevational view of the wind fairing of FIG. **18**; and,
FIG. **24** is a right side elevational view of the wind fairing of FIG. **18**.
The dash-dash-dash lines are included for the purpose of illustrating portions that form no part of the claimed design. The dash-dot-dash lines showing boundary lines form no part of the claimed design.

1 Claim, 18 Drawing Sheets

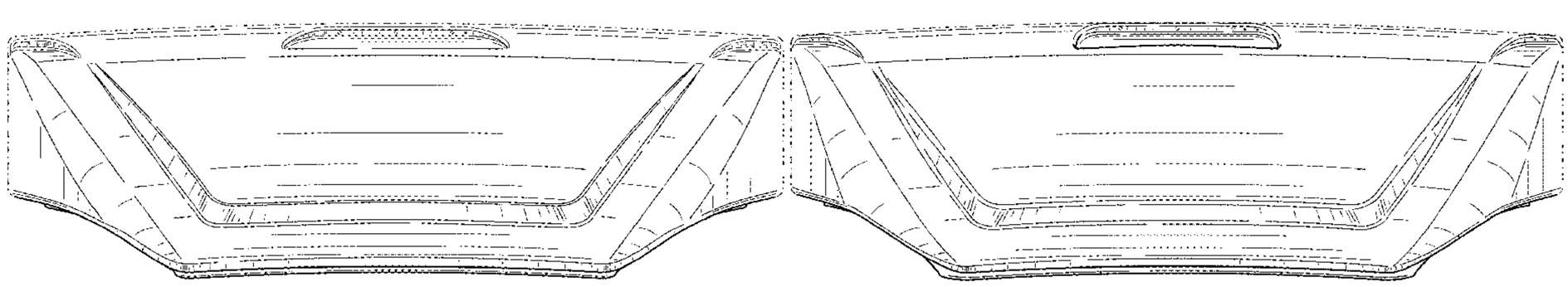

(58) **Field of Classification Search**
CPC B32B 3/00; B60S 9/205
See application file for complete search history.

(56) **References Cited**

U.S. PATENT DOCUMENTS

D722,544	S	*	2/2015	Ito	D12/181
D758,253	S	*	6/2016	Brzustowicz	D12/96
D813,772	S	*	3/2018	Anderson	D12/196
D881,097	S	*	4/2020	Smith	D12/196
D882,466	S	*	4/2020	Yong	D12/169
D885,272	S	*	5/2020	Smith	D12/181
D889,336	S	*	7/2020	Smith	D12/181
2017/0120964	A1	*	5/2017	Kim	B62D 35/001

* cited by examiner

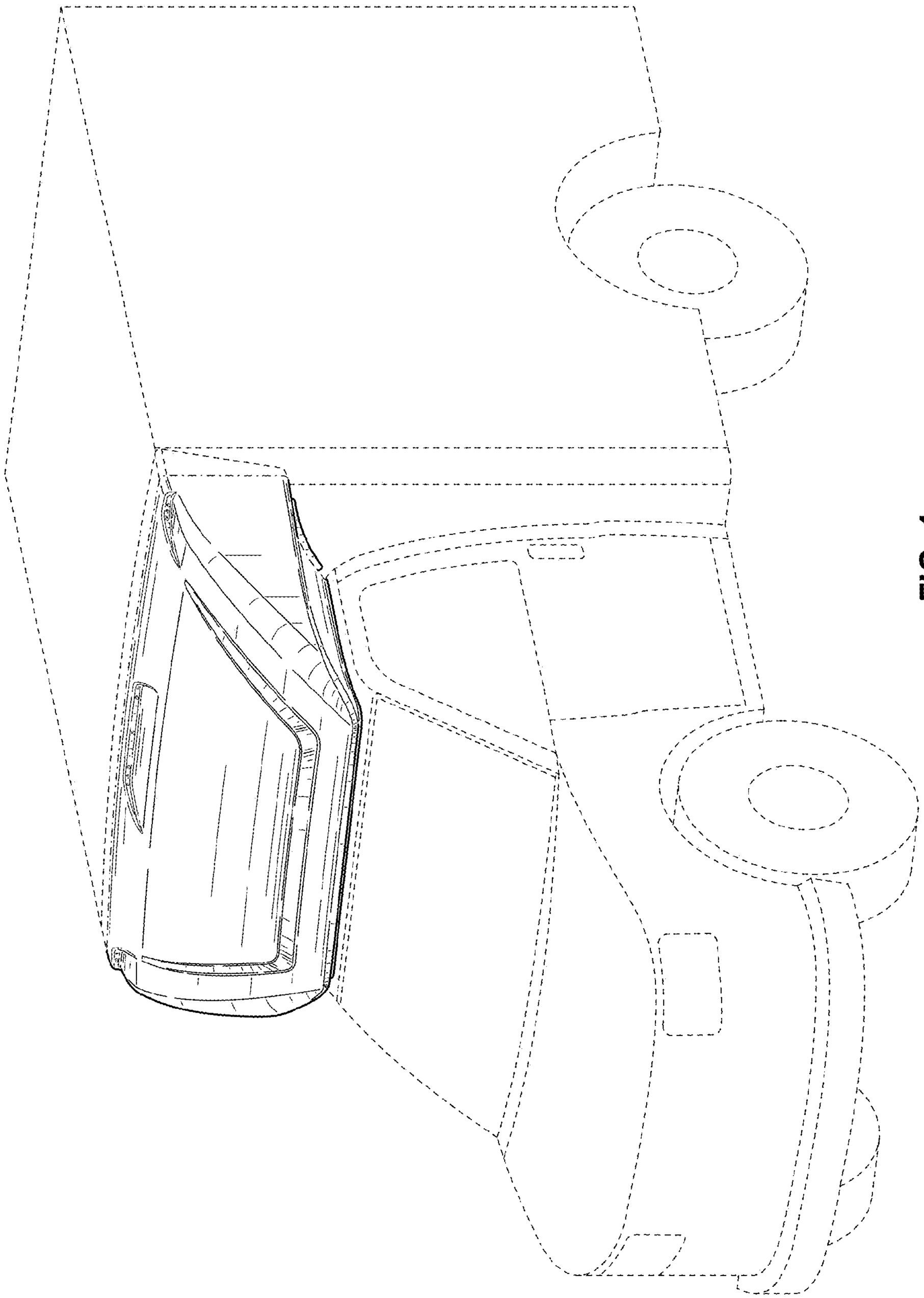

FIG. 1

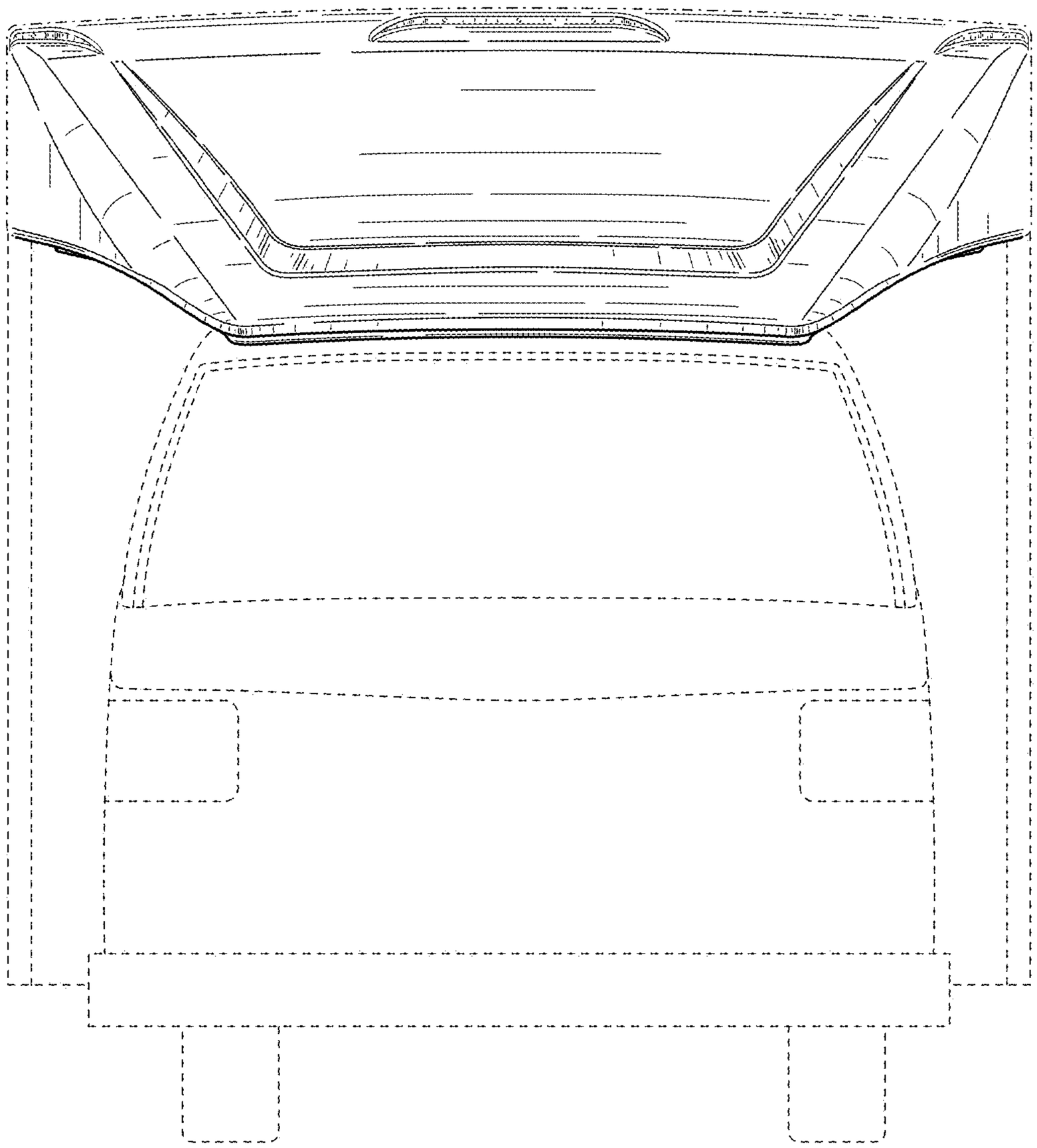

FIG. 2

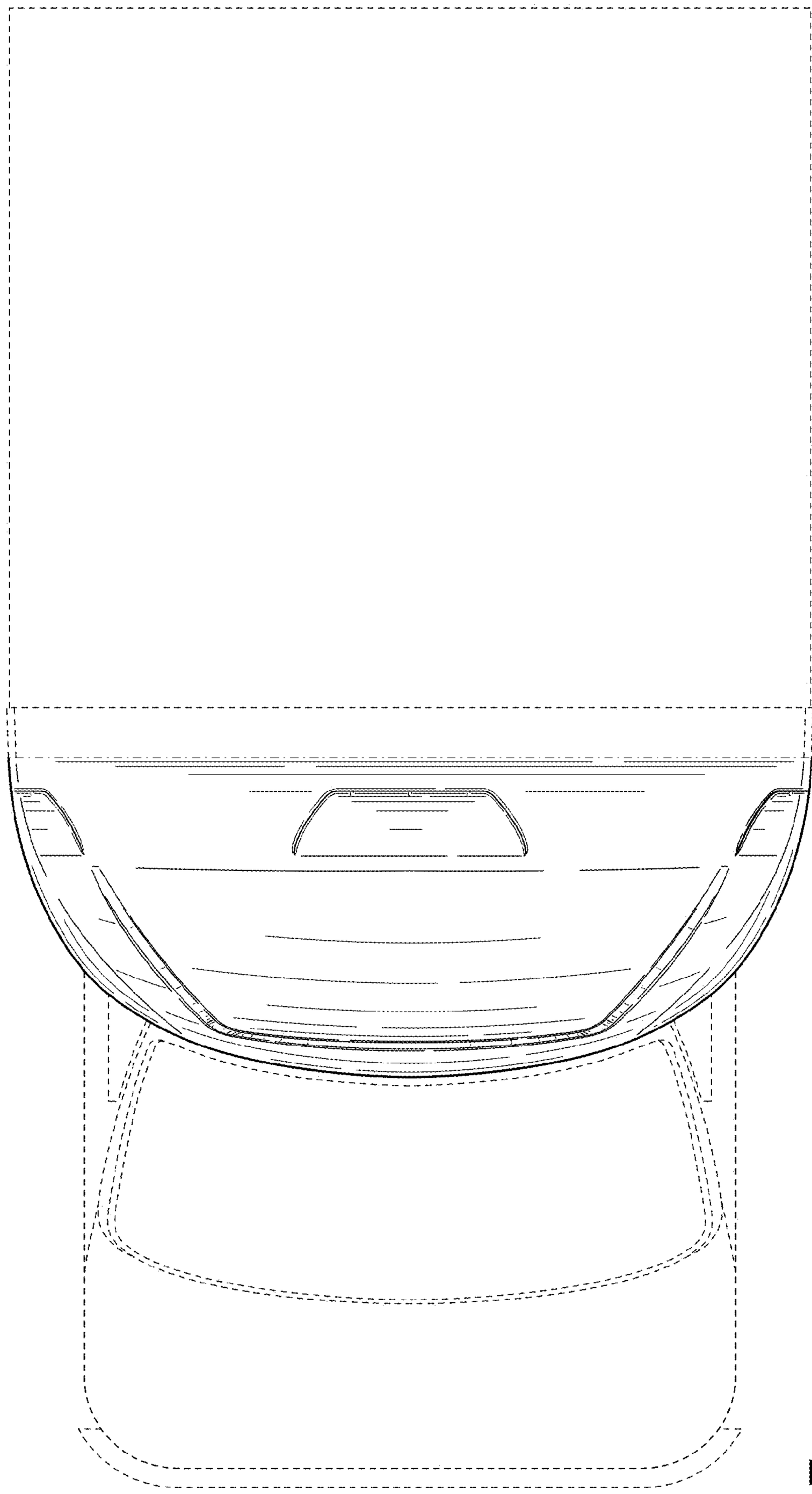

FIG. 3

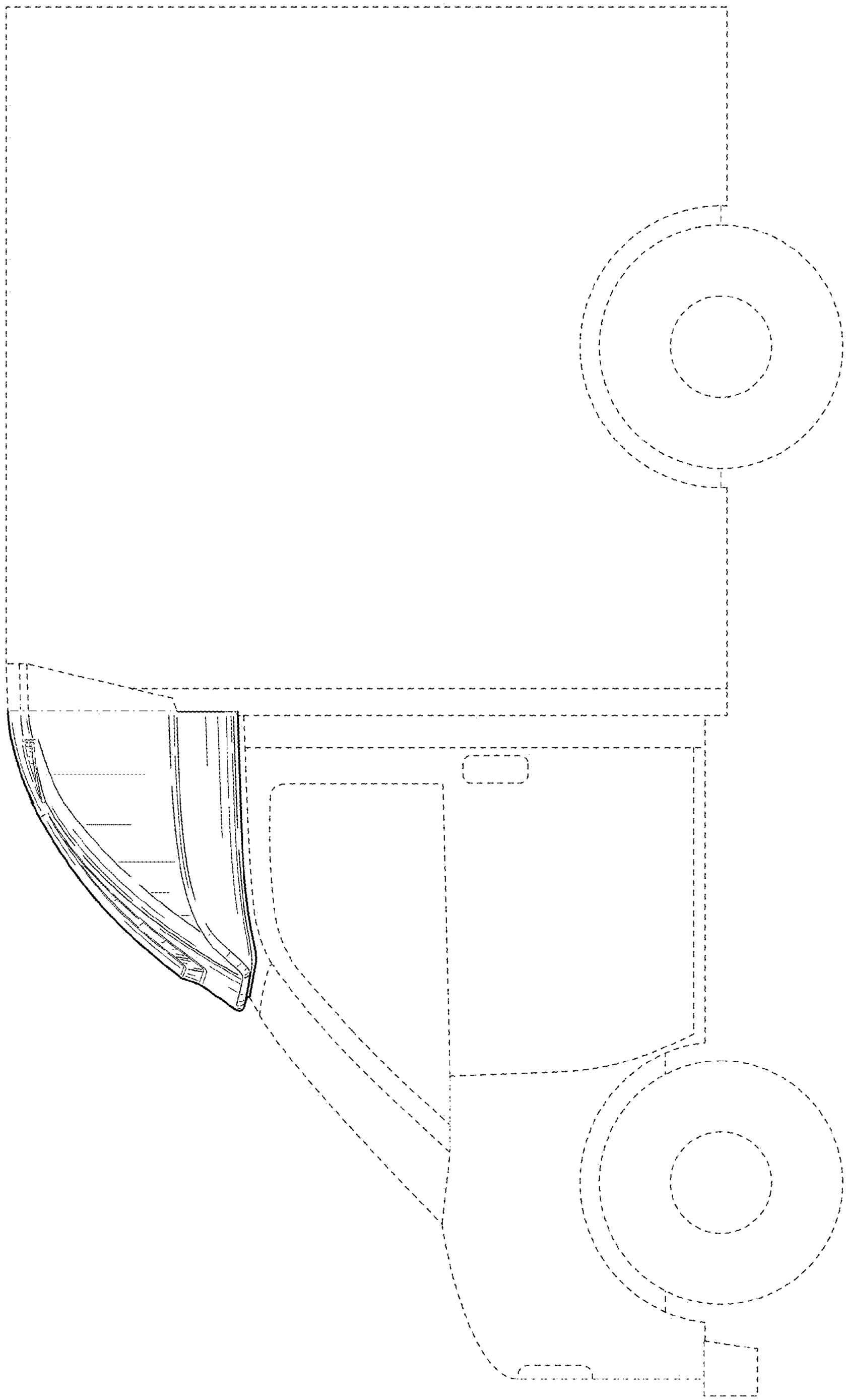

FIG. 4

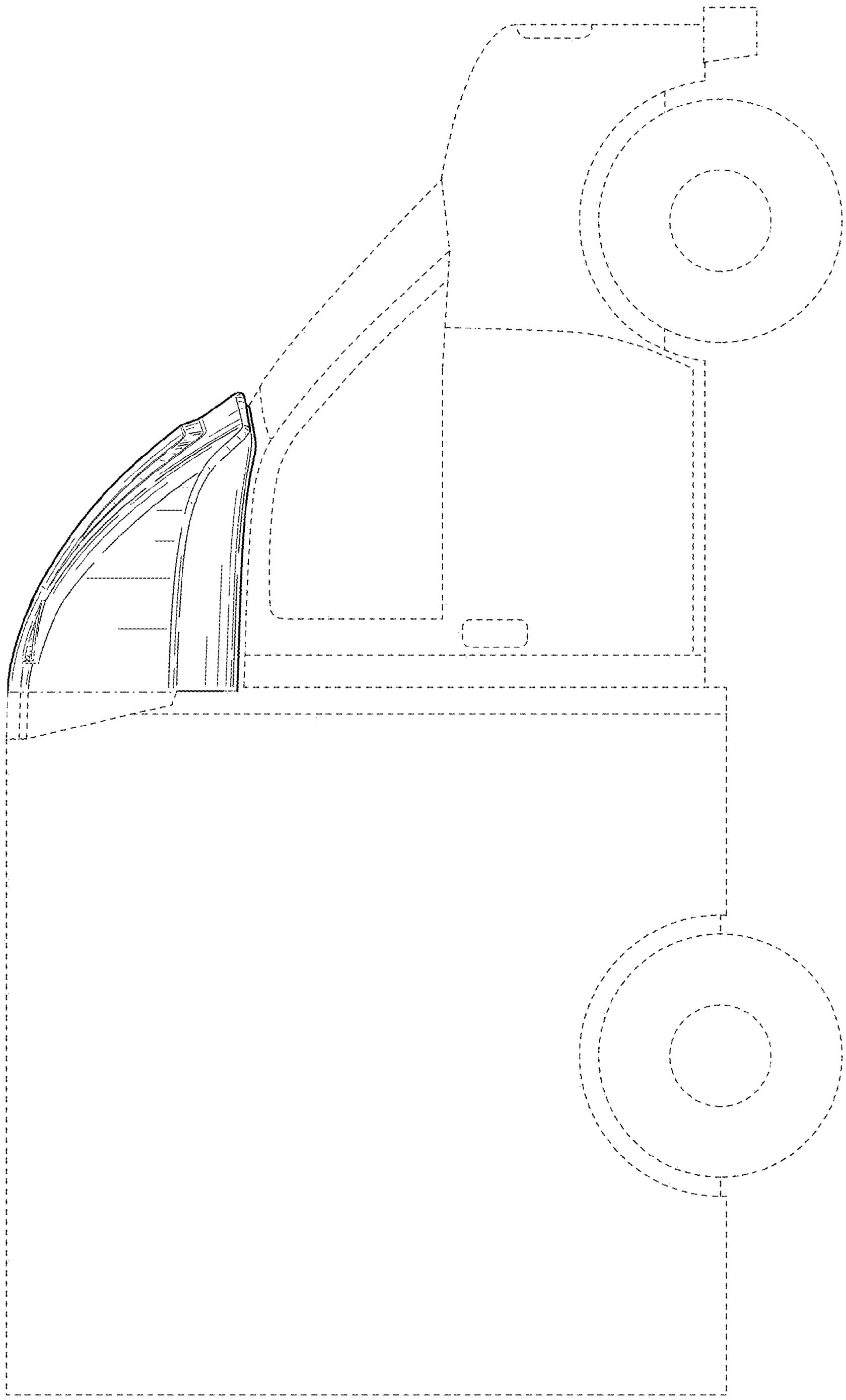

FIG. 5

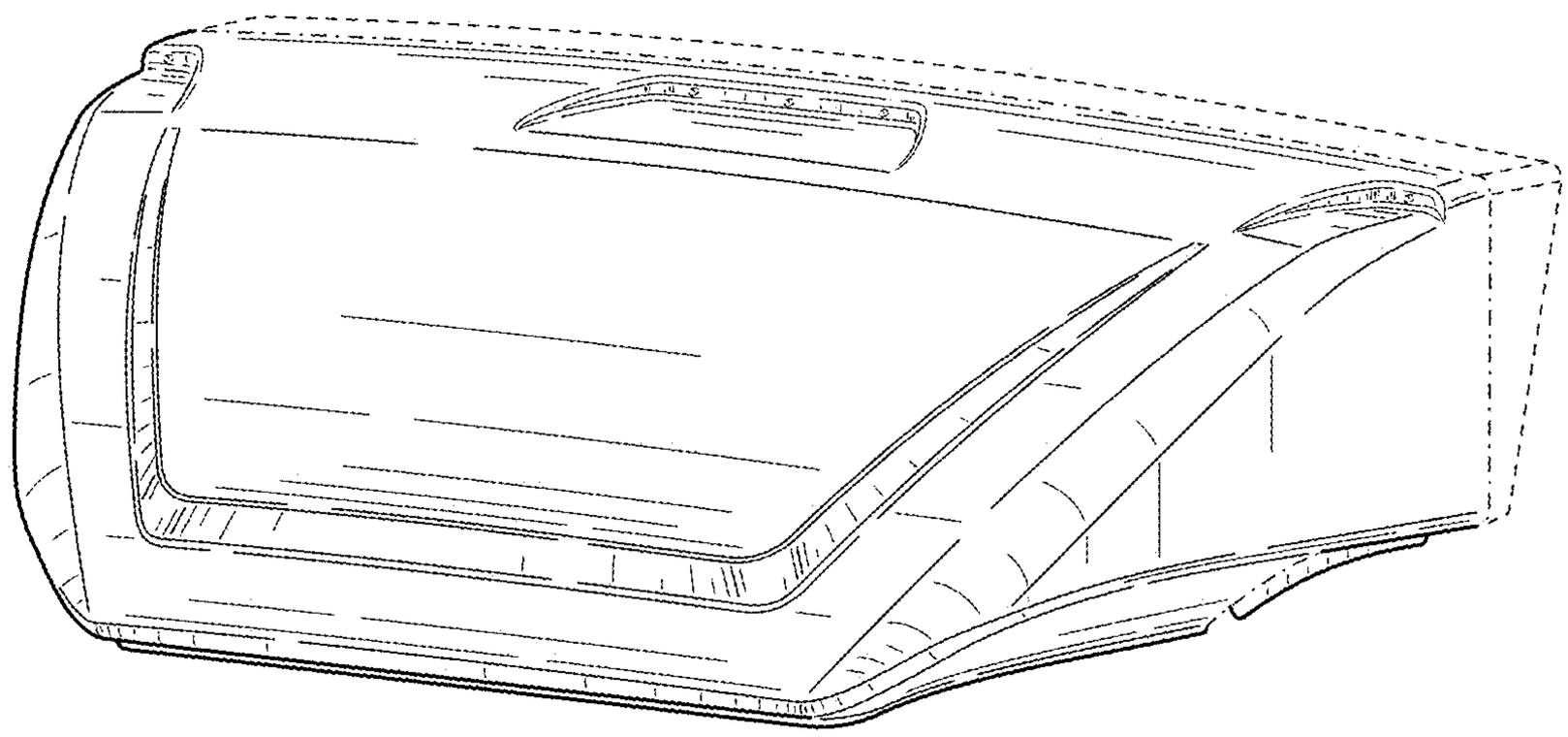

FIG. 6

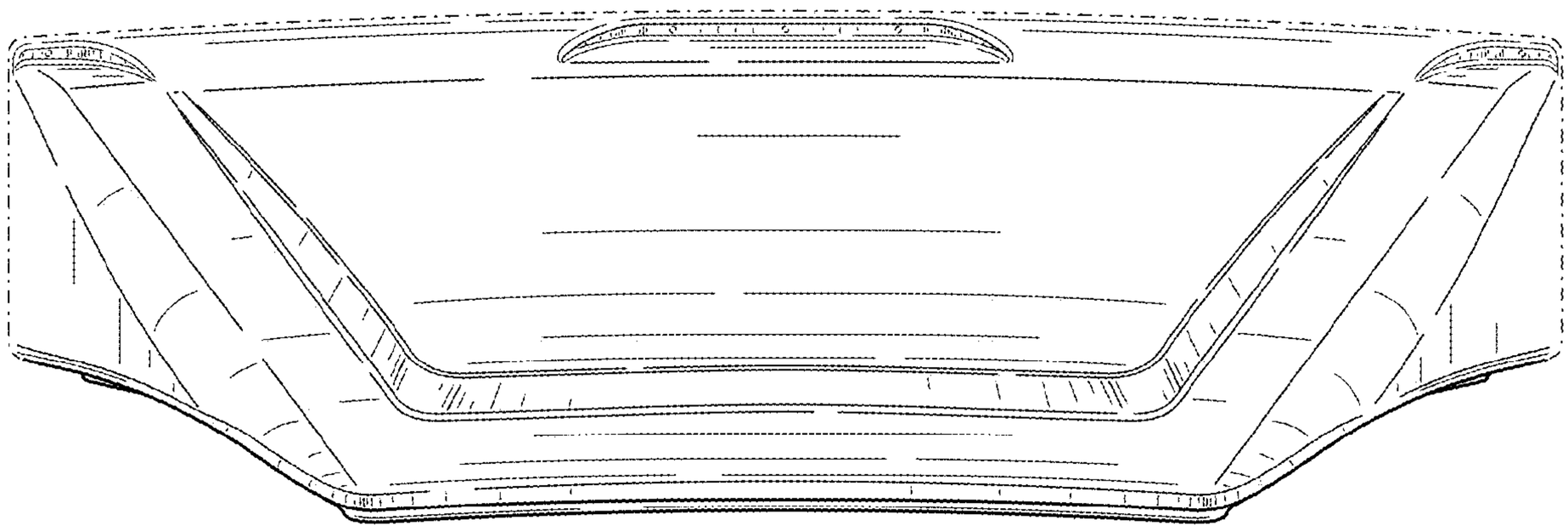

FIG. 7

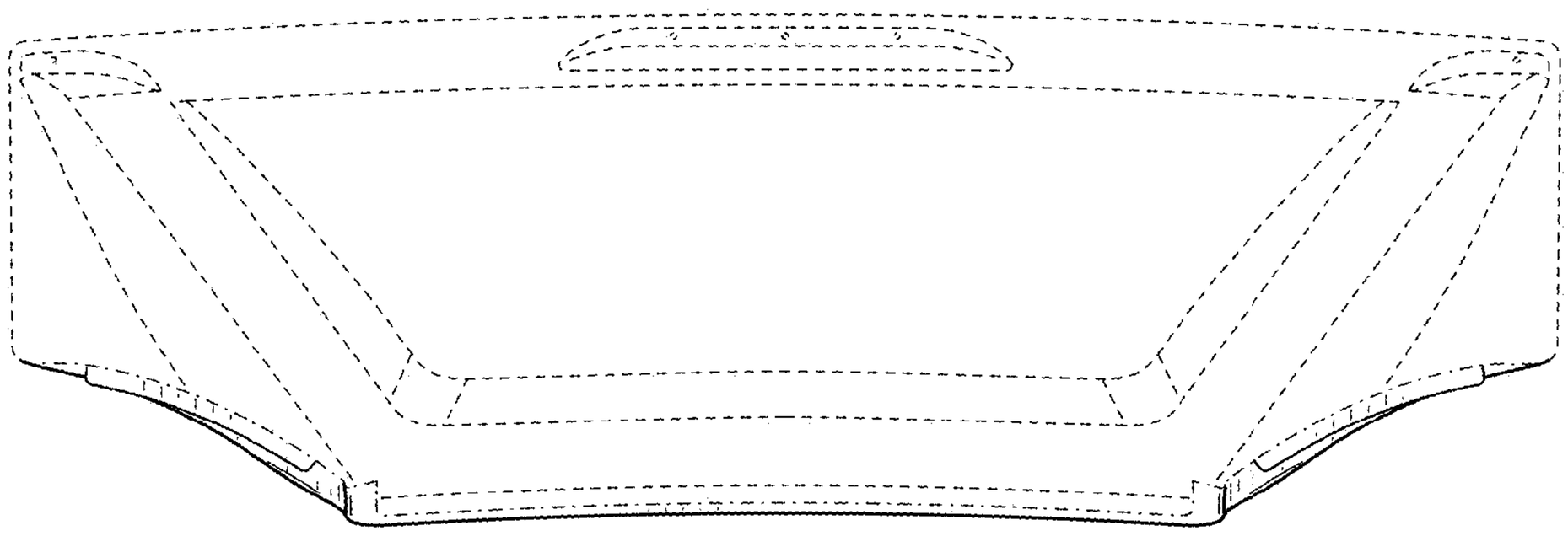

FIG. 8

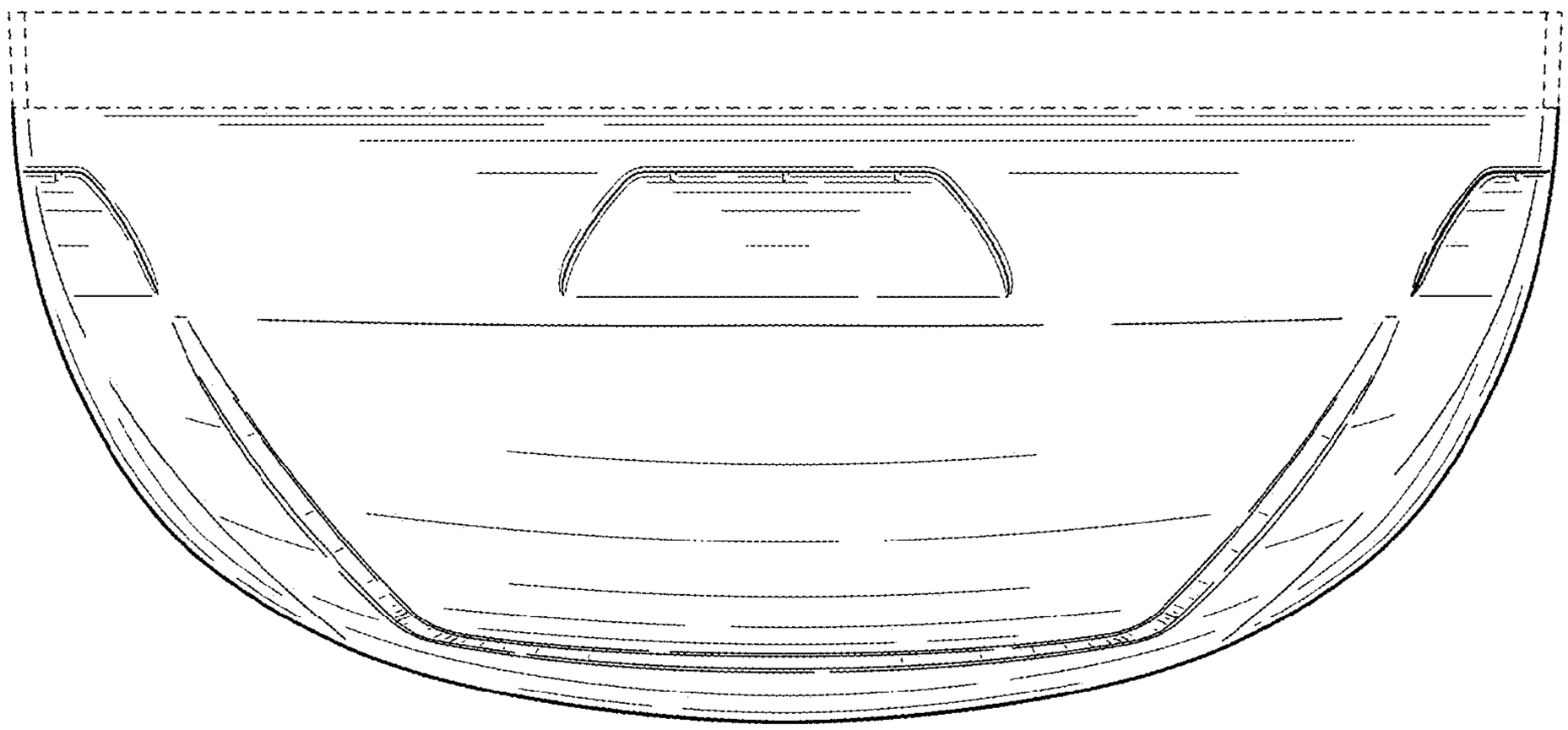

FIG. 9

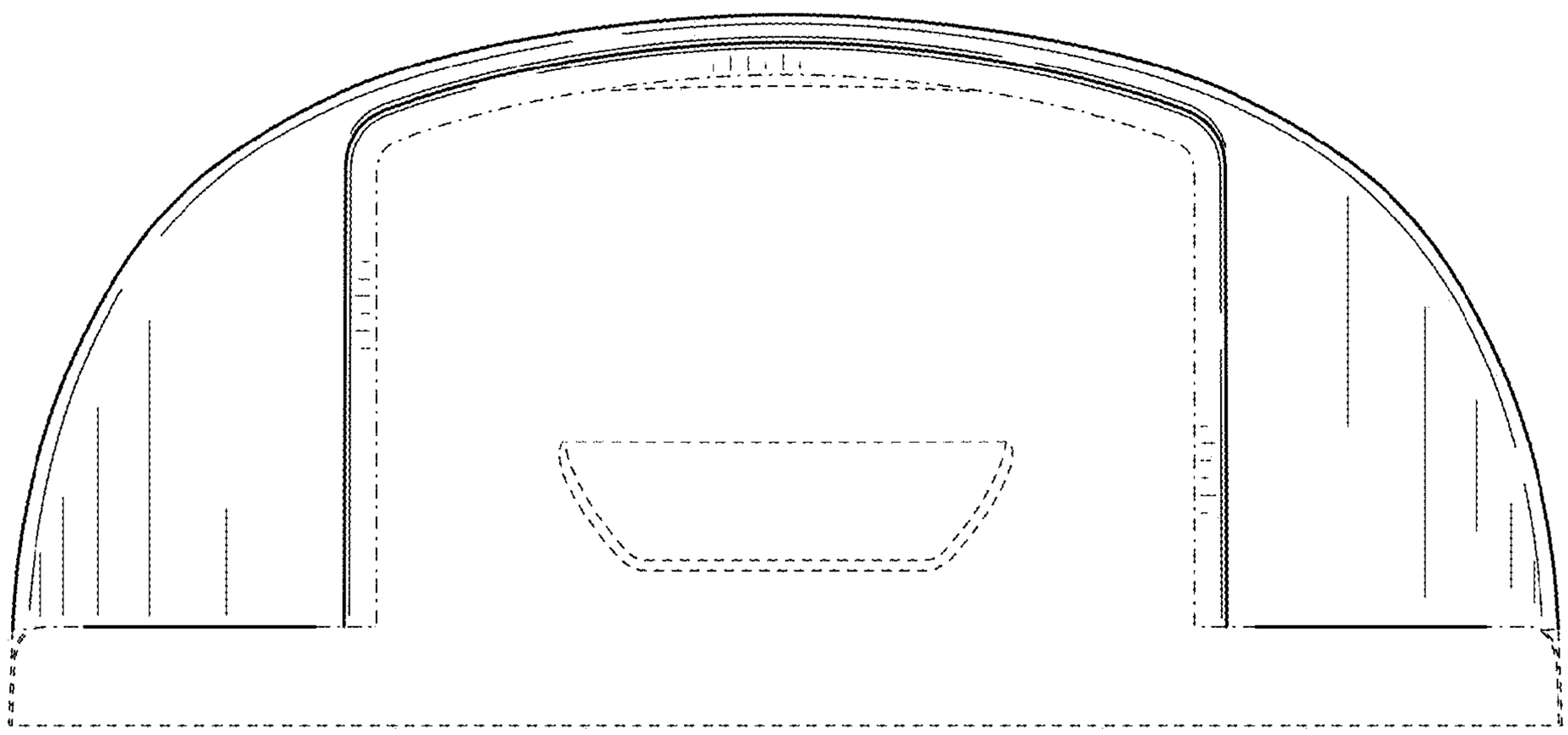

FIG. 10

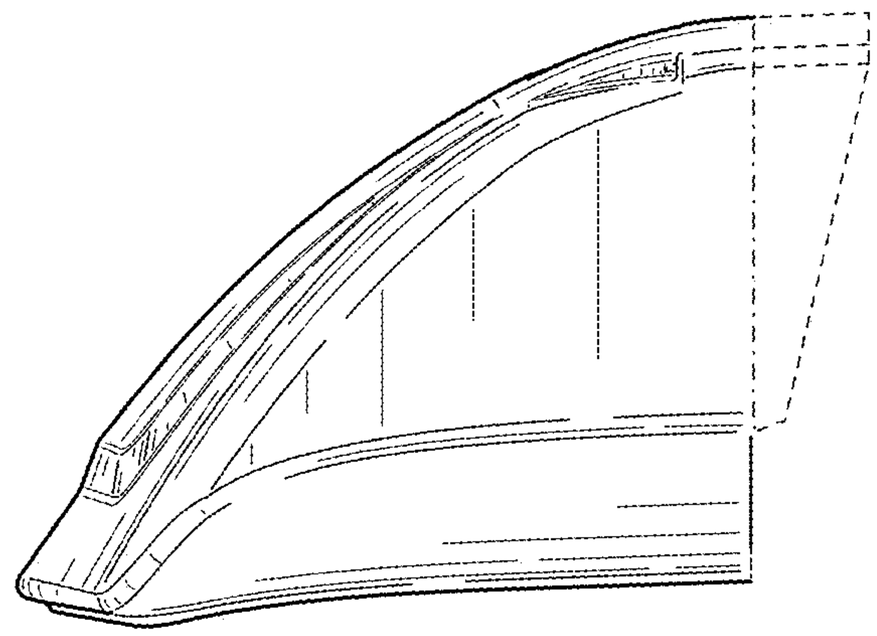

FIG. 11

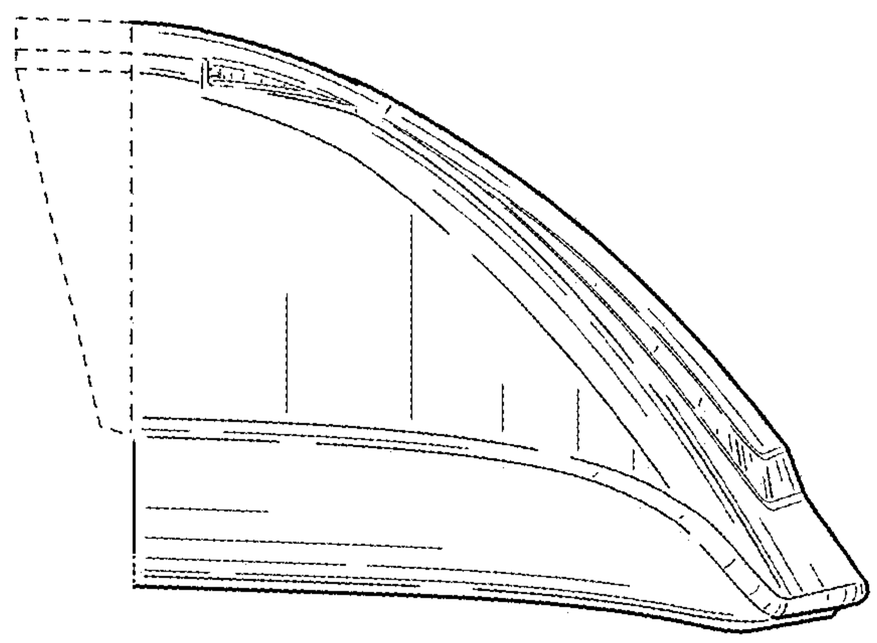

FIG. 12

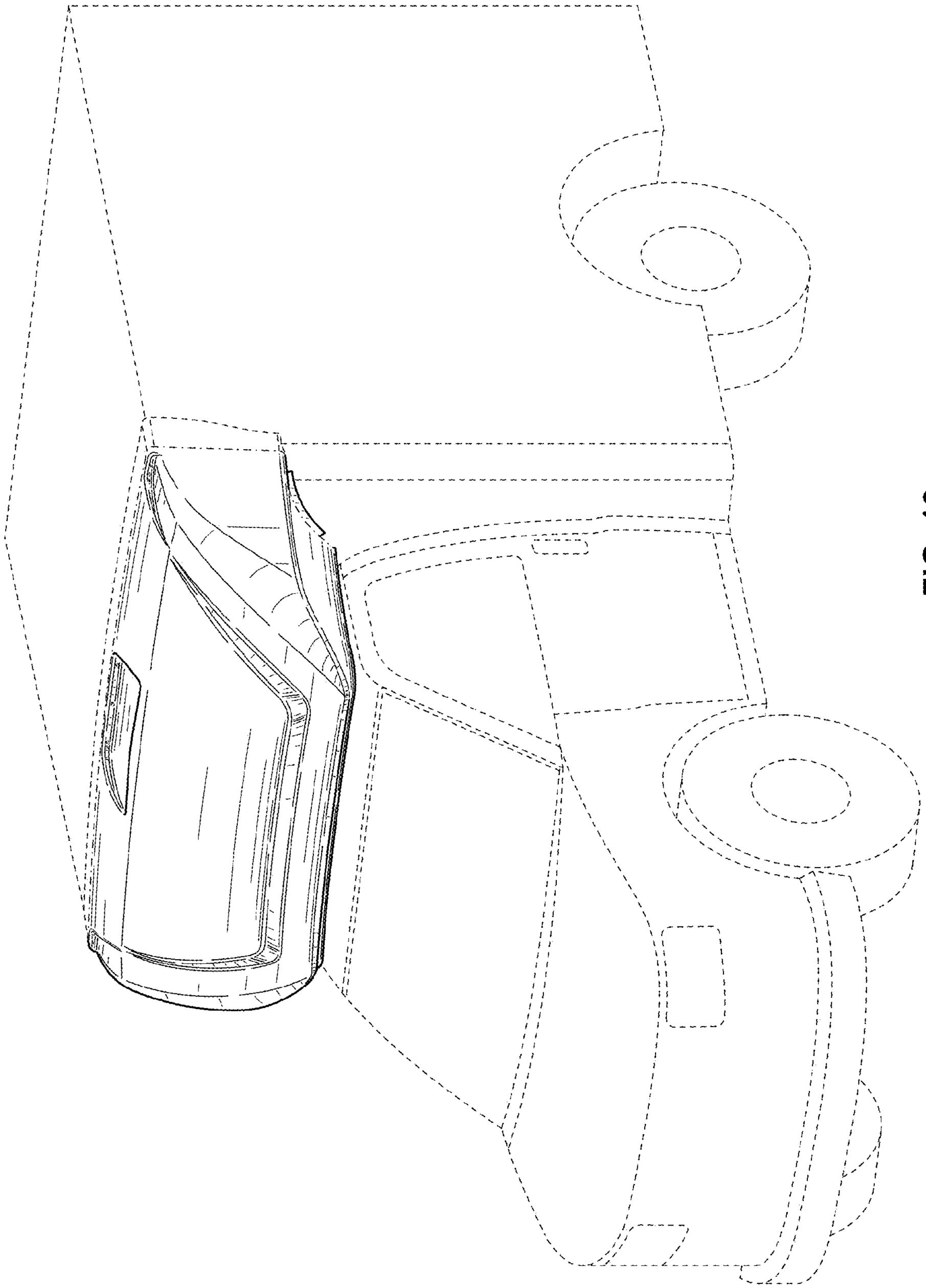

FIG. 13

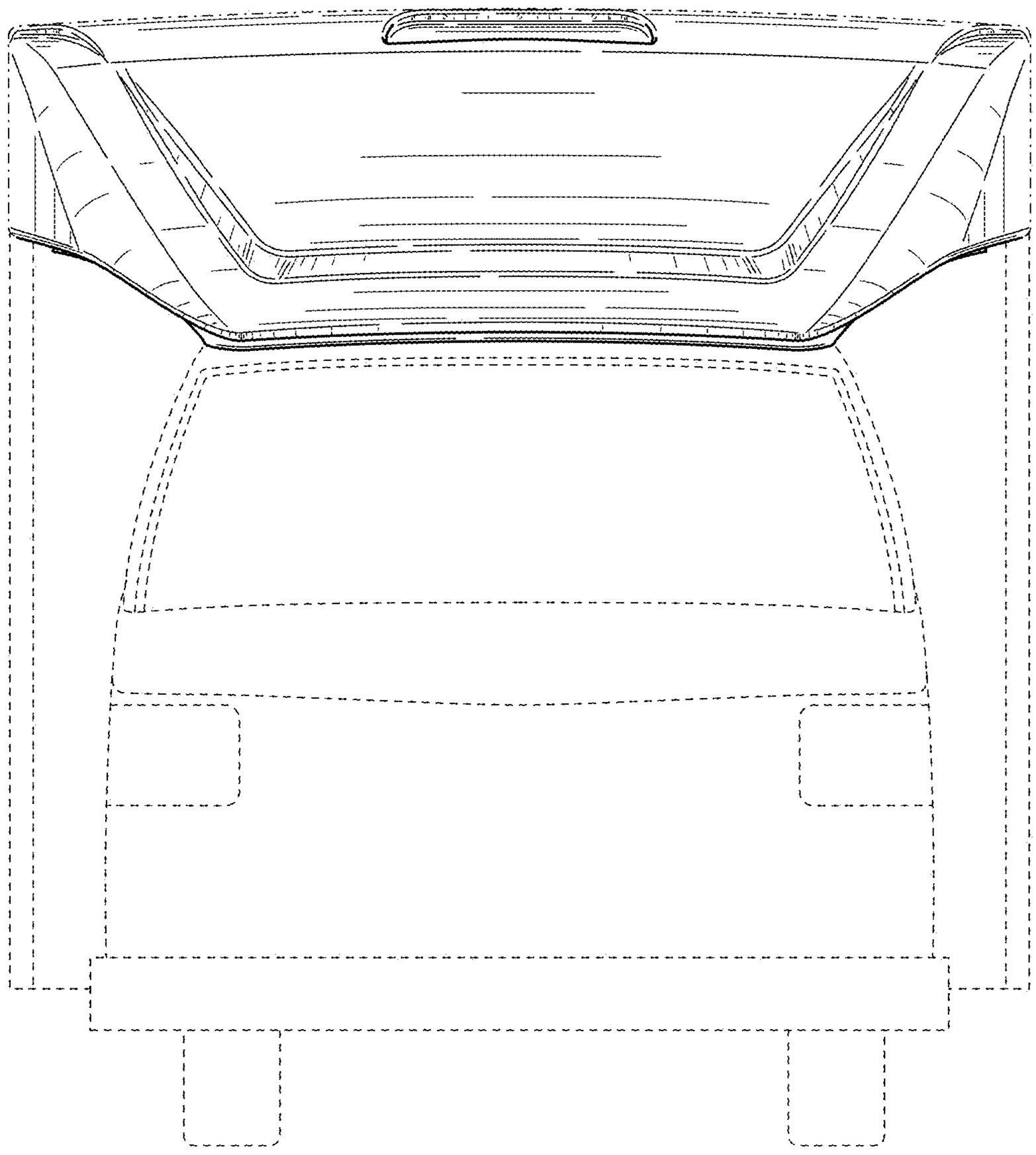

FIG. 14

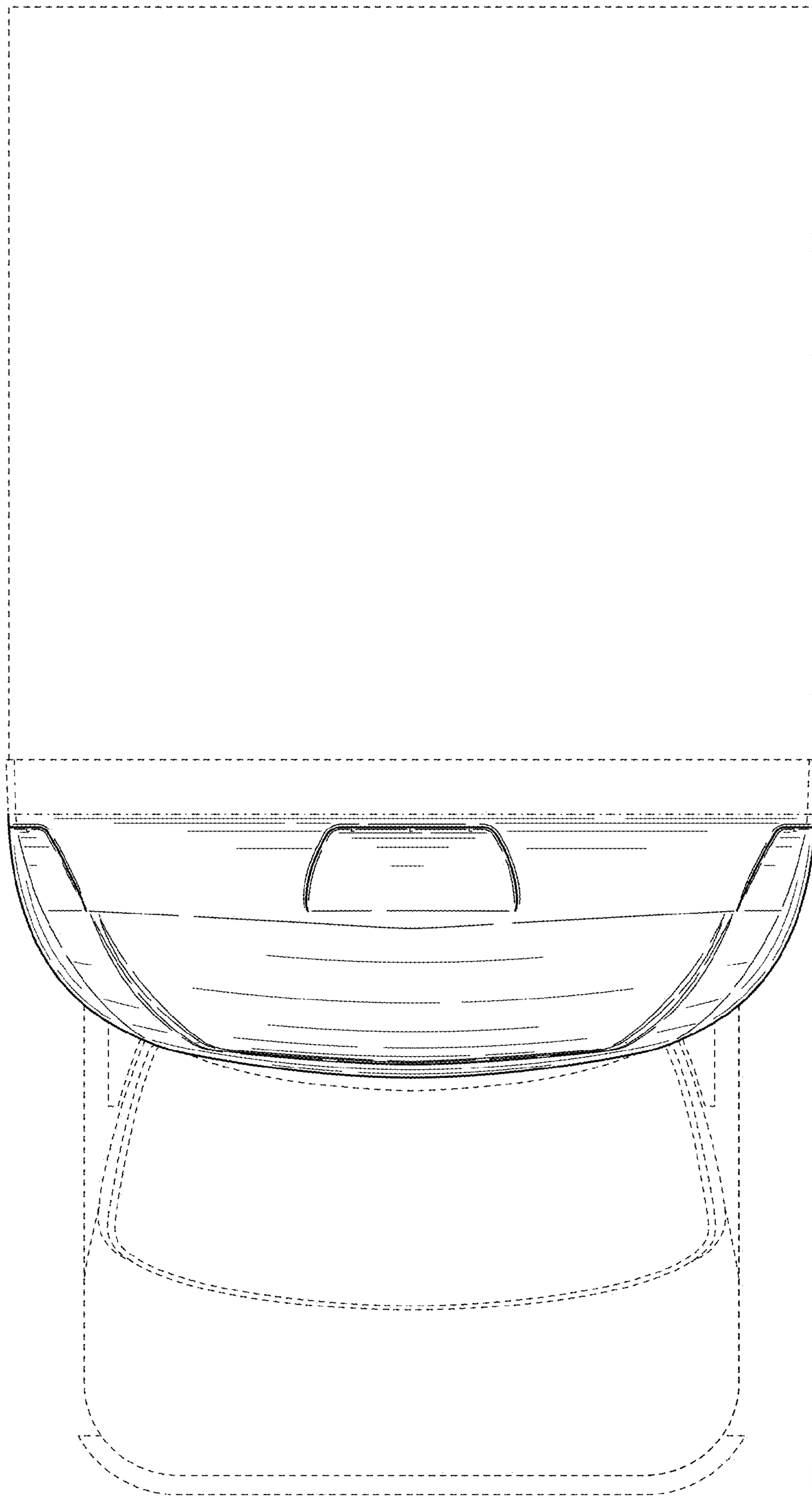

FIG. 15

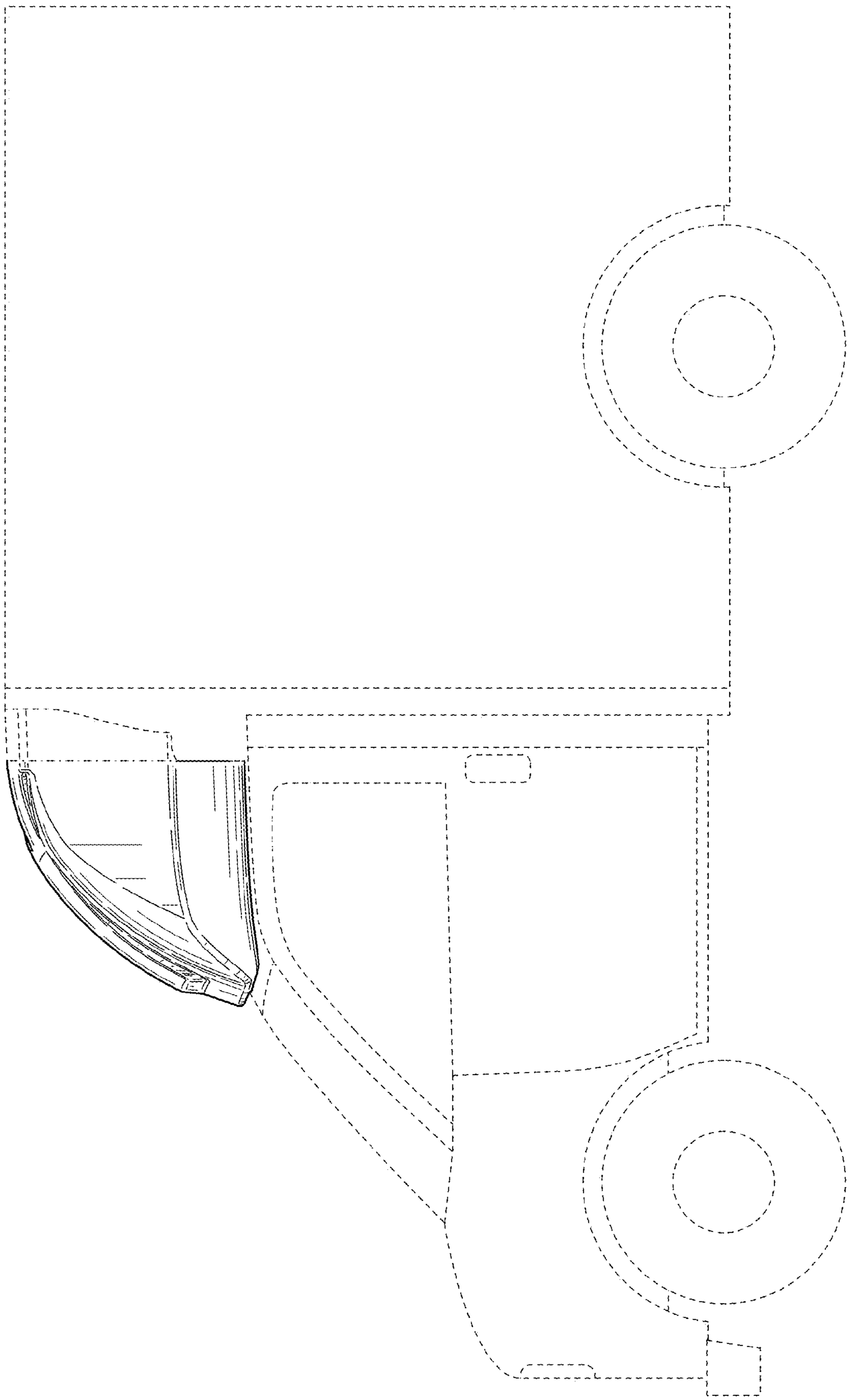

FIG. 16

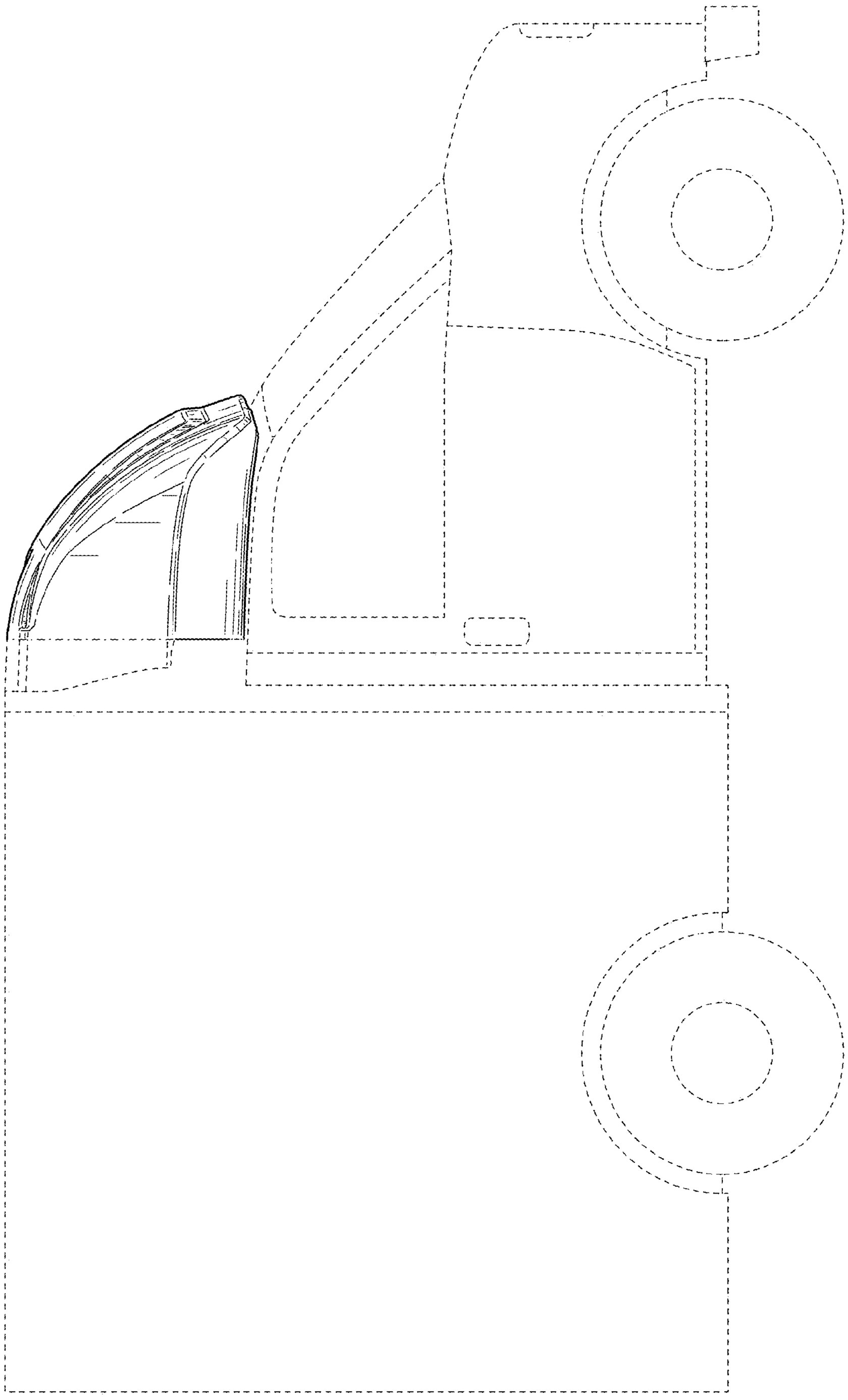

FIG. 17

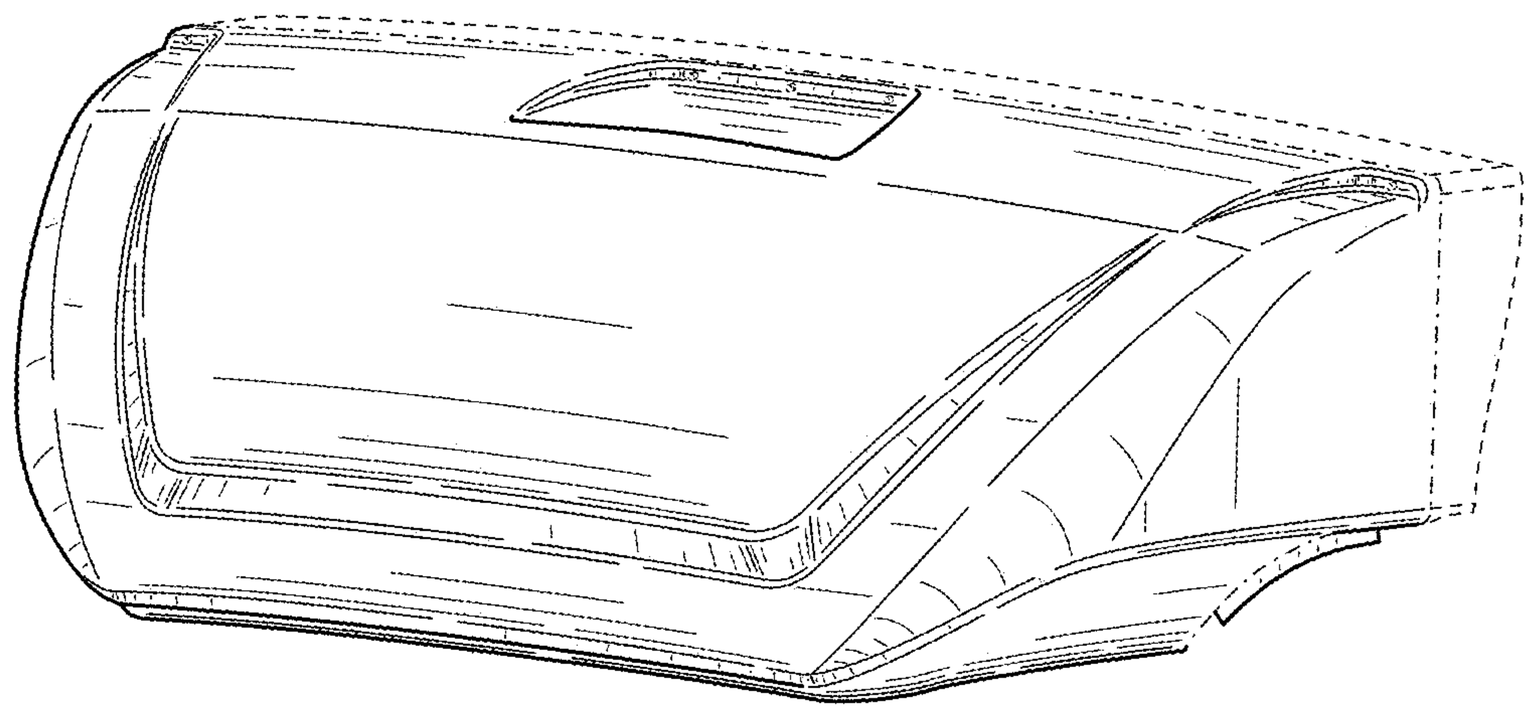

FIG. 18

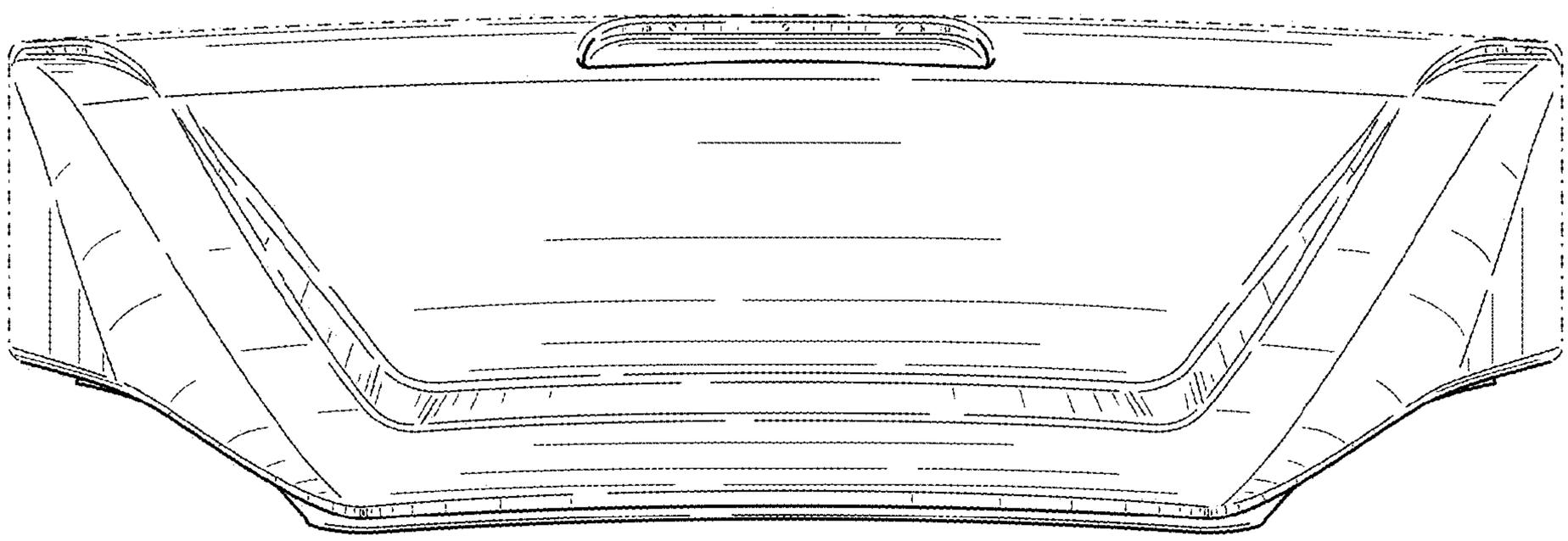

FIG. 19

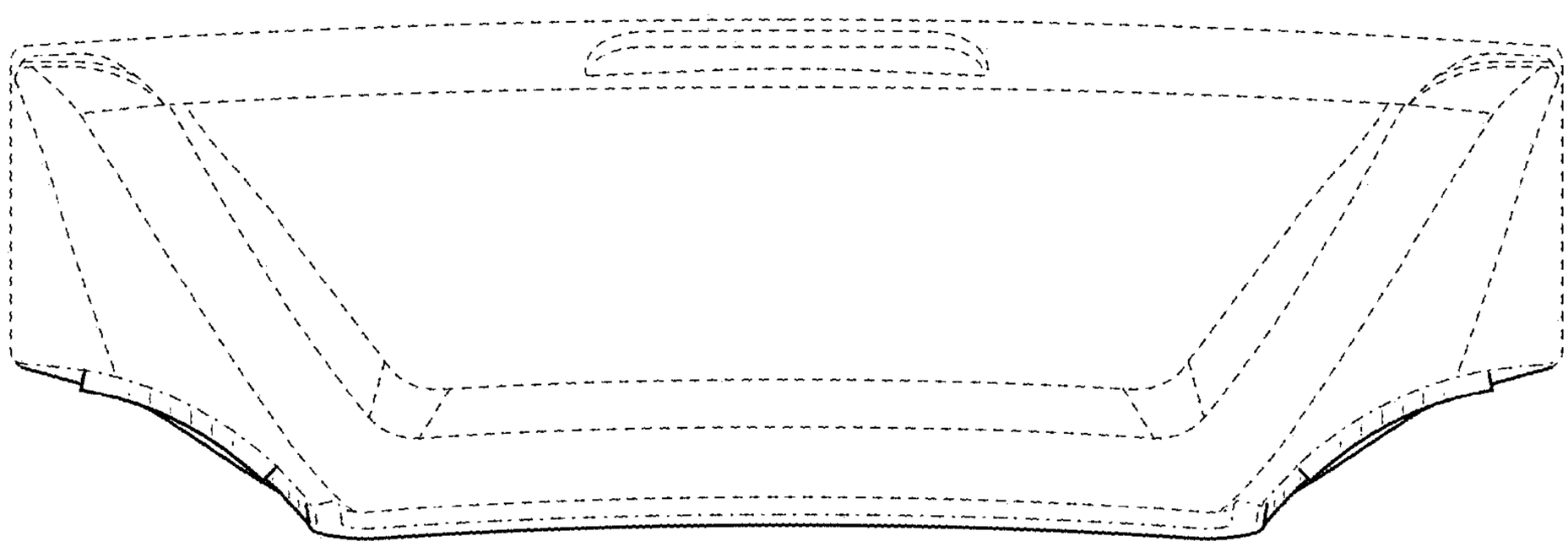

FIG. 20

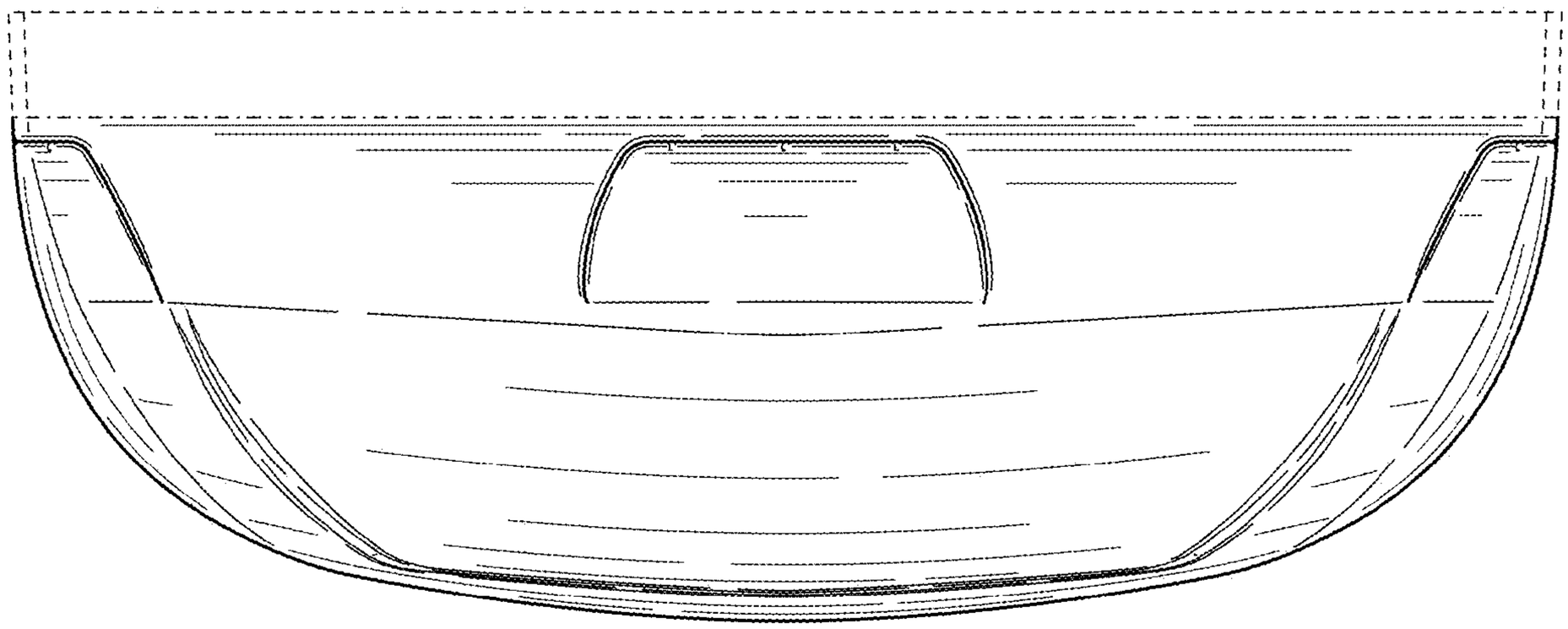

FIG. 21

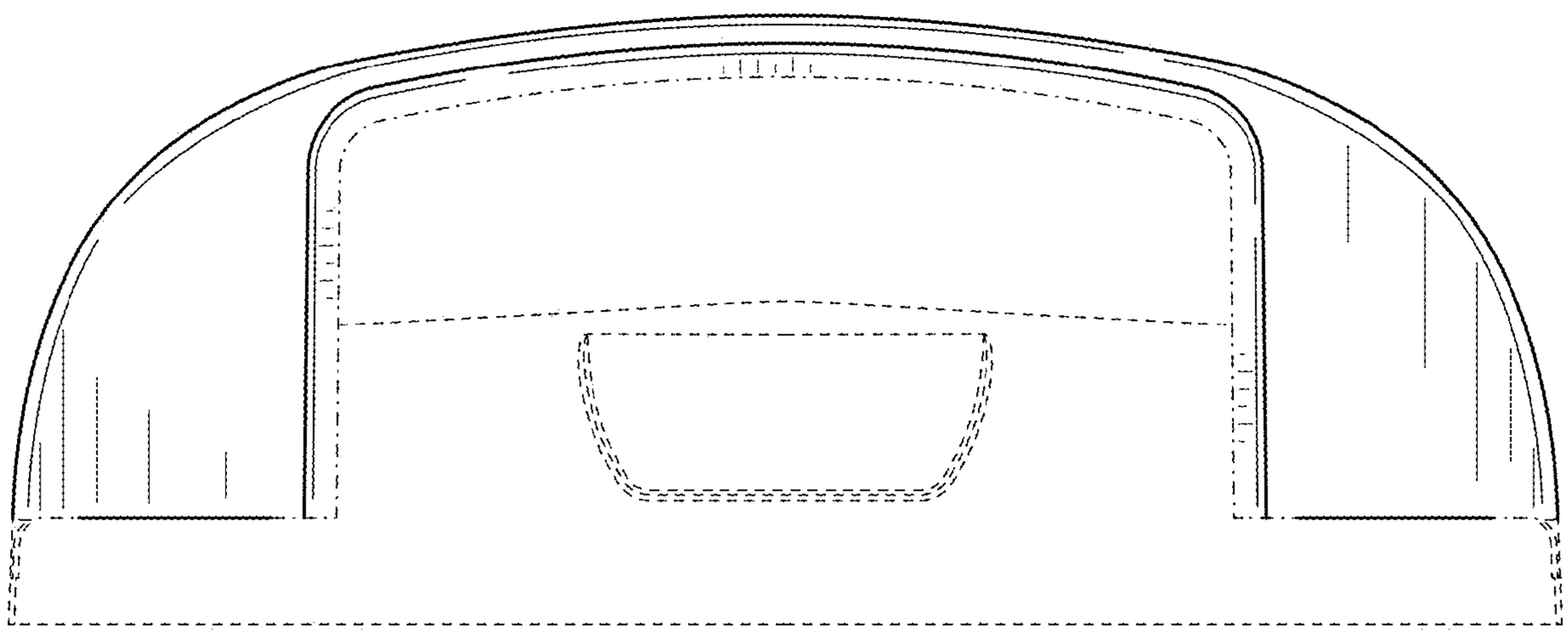

FIG. 22

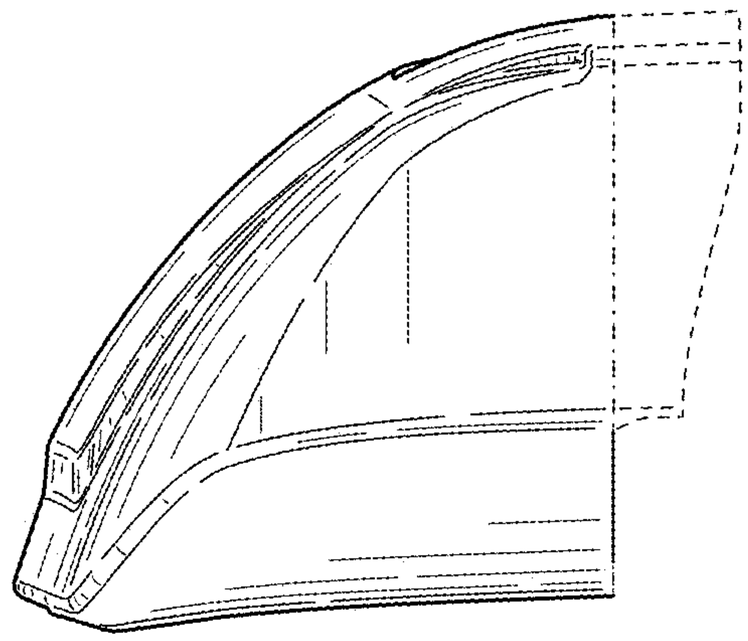

FIG. 23

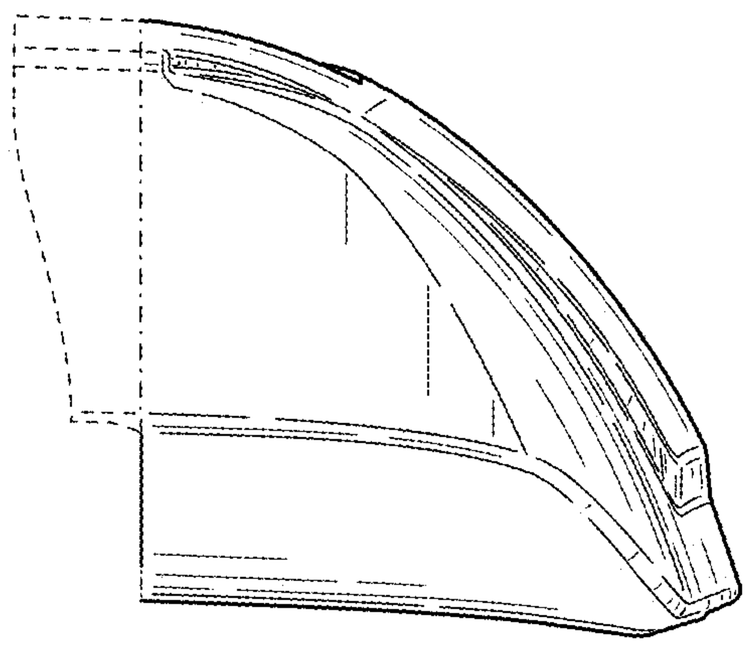

FIG. 24