US00D913994S

(12) United States Design Patent

Brunner et al.

(10) Patent No.: US D913,994 S
(45) Date of Patent: ** Mar. 23, 2021

(54) **EARPIECE**

(71) Applicant: **Apple Inc.**, Cupertino, CA (US)

(72) Inventors: **Robert Brunner**, Glen Ellen, CA (US); **Christopher Kuh**, San Francisco, CA (US); **Achille Biteau**, San Francisco, CA (US)

(73) Assignee: **Apple Inc.**, Cupertino, CA (US)

(**) Term: **15 Years**

(21) Appl. No.: **29/715,420**

(22) Filed: **Dec. 2, 2019**

Related U.S. Application Data

(63) Continuation of application No. 29/654,520, filed on Jun. 25, 2018, now Pat. No. Des. 868,749, which is a continuation of application No. 29/595,719, filed on Mar. 1, 2017, now Pat. No. Des. 821,364, which is a continuation of application No. 29/533,509, filed on Jul. 17, 2015, now Pat. No. Des. 780,721, which is a continuation of application No. 29/490,934, filed on May 15, 2014, now Pat. No. Des. 734,744, and a continuation of application No. 29/490,932, filed on May 15, 2014, now Pat. No. Des. 743,945, and a continuation of application No. 29/490,936, filed on May 15, 2014, now Pat. No. Des. 743,946.

(51) **LOC (13) Cl.** **14-01**

(52) **U.S. Cl.**
USPC **D14/223**

(58) **Field of Classification Search**
USPC D14/223, 205, 240, 249, 243; D24/106, D24/174; 128/864, 865, 866; 181/129; 379/426; 381/380, 381, 370, 330, 395; 455/90.3, 575.1, 569.1
CPC H04R 1/10; H04R 25/00; H04R 25/02; H04R 1/1016; H04R 1/1066; H04R 5/033; H04R 5/0335; H04R 1/1033; H04R 1/1058; H04R 1/025; H04R 1/1091
See application file for complete search history.

(56) **References Cited**

U.S. PATENT DOCUMENTS

968,008 A		8/1910	Waller	
1,558,191 A		10/1925	Lindemann	
1,587,643 A	*	6/1926	Harman	H04R 25/65 181/135
2,009,390 A		7/1935	Bayardi	
2,261,448 A		11/1939	Peterson	
2,248,837 A		7/1941	Walters	
2,430,229 A		11/1947	Kelsey	

(Continued)

FOREIGN PATENT DOCUMENTS

EM	003323807-0001	*	7/2016
MY	13-980-0101-0001	*	8/2014

Primary Examiner — Paula Allen Greene
(74) *Attorney, Agent, or Firm* — Sterne, Kessler, Goldstein & Fox P.L.L.C.

(57) **CLAIM**

The ornamental design for an earpiece, as shown and described.

DESCRIPTION

FIG. **1** is a perspective view of an earpiece showing the claimed design;
FIG. **2** is a front view thereof;
FIG. **3** is a rear view thereof;
FIG. **4** is a right side view thereof;
FIG. **5** is a left side view thereof;
FIG. **6** is a top view thereof; and,
FIG. **7** is a bottom view thereof.
The dashed broken lines in the figures show portions of the earpiece that form no part of the claimed design.
The dot-dash broken lines in the figures show boundaries that form no part of the claimed design.

1 Claim, 2 Drawing Sheets

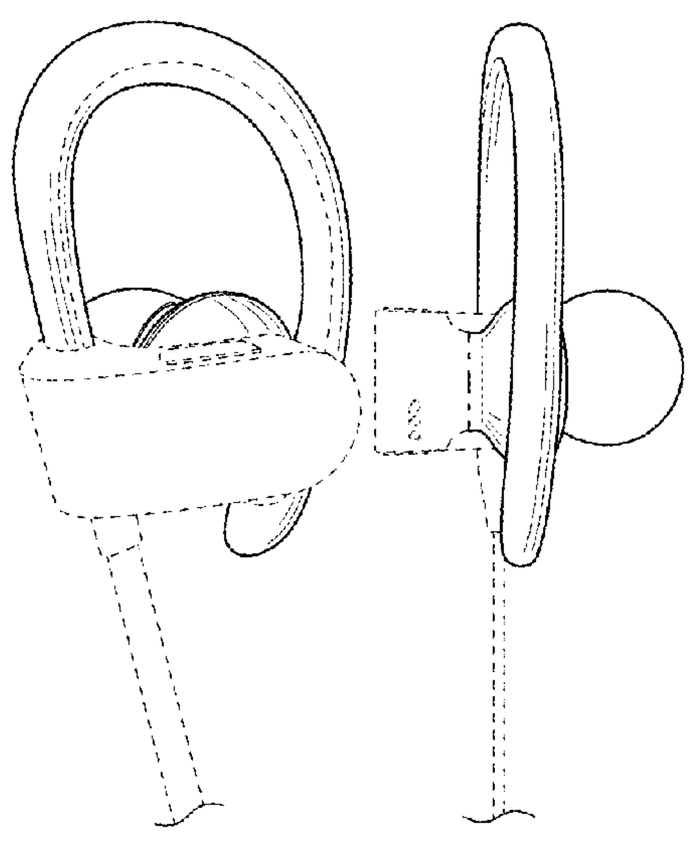

(56) **References Cited**

U.S. PATENT DOCUMENTS

2,474,135 A 6/1949 White
2,545,731 A 3/1951 French
2,719,523 A 10/1955 von Gierke
2,739,660 A 3/1956 French
3,319,736 A 5/1967 Reynolds
3,440,365 A * 4/1969 Hazell H04M 1/05 379/430
4,133,984 A 1/1979 Akiyama
4,253,452 A 3/1981 Powers et al.
D259,279 S * 5/1981 Takeda D24/106
4,646,872 A 3/1987 Kamon et al.
D304,191 S 10/1989 Sekine
4,917,504 A * 4/1990 Scott H04M 1/05 381/330
4,972,468 A * 11/1990 Murase H04B 1/385 379/430
4,997,055 A 3/1991 Grady
5,179,501 A 1/1993 Ocken et al.
5,210,792 A 5/1993 Kajihara
5,410,608 A 4/1995 Lucey et al.
D375,959 S * 11/1996 Davis D14/206
5,625,171 A 4/1997 Marshall
5,659,156 A 8/1997 Mauney et al.
D383,757 S * 9/1997 Dobrusskin D14/223
D403,300 S 12/1998 Renk
D421,755 S 3/2000 Pitel
6,056,082 A 5/2000 Lindgren et al.
6,101,260 A 8/2000 Jensen et al.
D436,623 S 1/2001 Schmidt et al.
6,233,344 B1 5/2001 Clegg et al.
D443,261 S 6/2001 Yuyama
D460,749 S 7/2002 Liu
6,418,230 B1 * 7/2002 McDonald H04R 1/10 381/381
6,427,018 B1 7/2002 Keliiliki
D471,889 S 3/2003 Rath et al.
D477,593 S 6/2003 Komiyama
D480,073 S * 9/2003 Jensen D14/224
D482,348 S 11/2003 Villaverde et al.
D484,166 S 12/2003 Senda
6,728,388 B1 4/2004 Nageno et al.
6,738,487 B1 5/2004 Nageno et al.
6,771,790 B2 8/2004 Liu
D501,196 S 1/2005 Dyer et al.
6,868,284 B2 3/2005 Bae
D510,085 S 9/2005 Suzuki
D510,575 S 10/2005 Leong
D518,816 S * 4/2006 Naito D14/205
D528,531 S 9/2006 Rose et al.
D538,269 S 3/2007 Tragatschnig
D538,270 S 3/2007 Kim et al.
D538,271 S 3/2007 Kim et al.
D538,792 S 3/2007 Kim et al.
D539,787 S 4/2007 Kim et al.
D542,267 S 5/2007 Cha et al.
D543,968 S 6/2007 Wong
7,231,056 B2 6/2007 Chen
D550,202 S 9/2007 Meier et al.
D556,735 S 12/2007 Yeo
D575,772 S 8/2008 Schultz et al.
D584,293 S 1/2009 Kim et al.
D584,294 S 1/2009 Nam et al.
D593,075 S 5/2009 Williams et al.
7,551,748 B2 6/2009 Kamo et al.
D597,084 S 7/2009 Gondo
D598,901 S 8/2009 Lee et al.
D599,781 S * 9/2009 Lee D14/205
D601,126 S 9/2009 Christopher et al.
D601,548 S 10/2009 Morisawa
D603,378 S 11/2009 Paradise
D603,847 S 11/2009 Chung
D606,048 S 12/2009 Soetejo et al.
7,648,005 B2 1/2010 Leong et al.
7,664,287 B2 2/2010 Neu et al.
7,681,577 B2 3/2010 Blanchard
7,708,110 B2 5/2010 Leong et al.
D617,780 S 6/2010 Jaakkola et al.
D618,669 S 6/2010 Johnson et al.
D624,529 S 9/2010 Huang
7,841,446 B2 11/2010 Leong et al.
D631,470 S 1/2011 Yoneyama et al.
D635,960 S 4/2011 Gondo et al.
D638,409 S 5/2011 Walter
D643,418 S 8/2011 Lee et al.
8,068,633 B2 11/2011 Lee et al.
8,090,135 B2 1/2012 Lin
D658,157 S 4/2012 McManigal
D666,581 S * 9/2012 Perez D14/223
8,265,328 B2 9/2012 Milde et al.
D668,631 S 10/2012 Katsumata et al.
D671,523 S 11/2012 Daniel
D686,196 S 7/2013 Lee et al.
D695,275 S 12/2013 Chee
D699,213 S 2/2014 Burgett et al.
D699,226 S * 2/2014 Yoon D14/223
8,712,087 B2 * 4/2014 Ozawa H04R 1/1016 381/380
D710,333 S 8/2014 Davies et al.
D712,382 S 9/2014 Brunner et al.
D713,385 S 9/2014 Burgett et al.
D713,822 S 9/2014 Paradise et al.
8,908,899 B1 12/2014 Yang
D725,637 S 3/2015 Nakajima
D734,744 S 7/2015 Brunner et al.
D740,260 S 10/2015 Brunner et al.
D741,299 S 10/2015 Brunner et al.
D743,945 S 11/2015 Brunner et al.
D743,946 S 11/2015 Brunner et al.
D745,862 S 12/2015 Otani et al.
D767,532 S 9/2016 Jen
D775,610 S 1/2017 Nakajima
D780,721 S 3/2017 Brunner et al.
D787,477 S 5/2017 Lee
D792,378 S 6/2017 Brunner et al.
D799,316 S 10/2017 Thain et al.
D806,684 S 1/2018 Tsai
D807,331 S 1/2018 Morimoto
D809,487 S 2/2018 Lee et al.
D810,053 S 2/2018 Otani et al.
D821,364 S 6/2018 Brunner et al.
D834,003 S 11/2018 Maeda
D838,692 S 1/2019 Fu
D844,588 S * 4/2019 Brunner D14/223
D847,780 S 5/2019 Brunner et al.
D868,749 S 12/2019 Brunner et al.
D882,545 S * 4/2020 Li D14/205
D896,204 S * 9/2020 Brunner D14/223
D899,399 S * 10/2020 Jung D14/205
2013/0216087 A1 8/2013 MacDonald
2014/0138150 A1 5/2014 Huang
2017/0105679 A1 4/2017 Gil

* cited by examiner

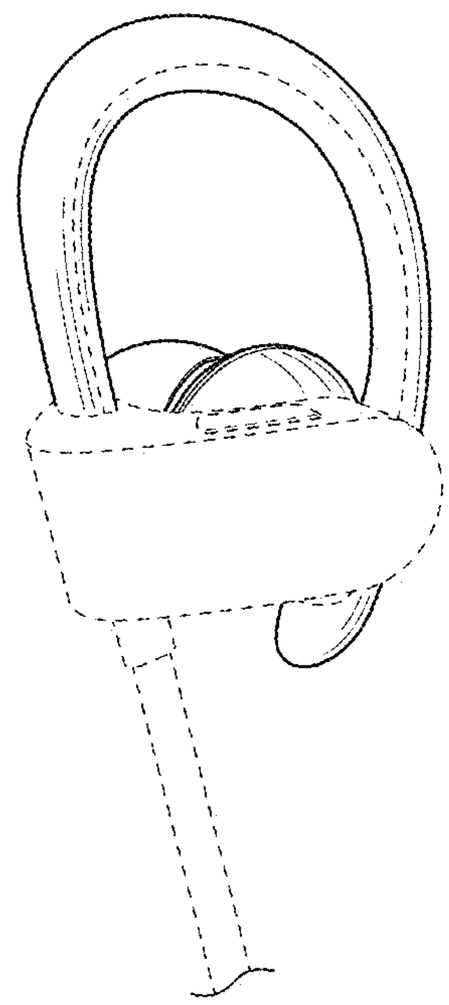

FIG. 1

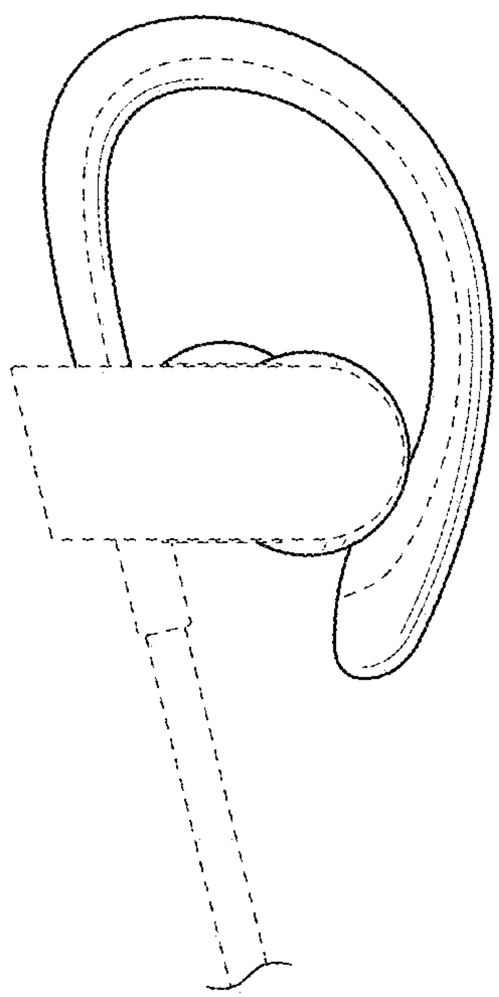

FIG. 2

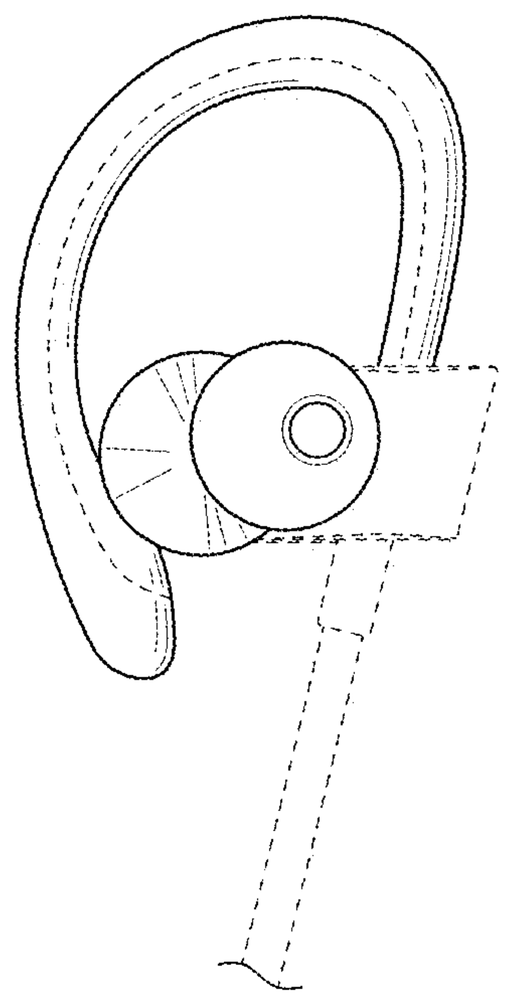

FIG. 3

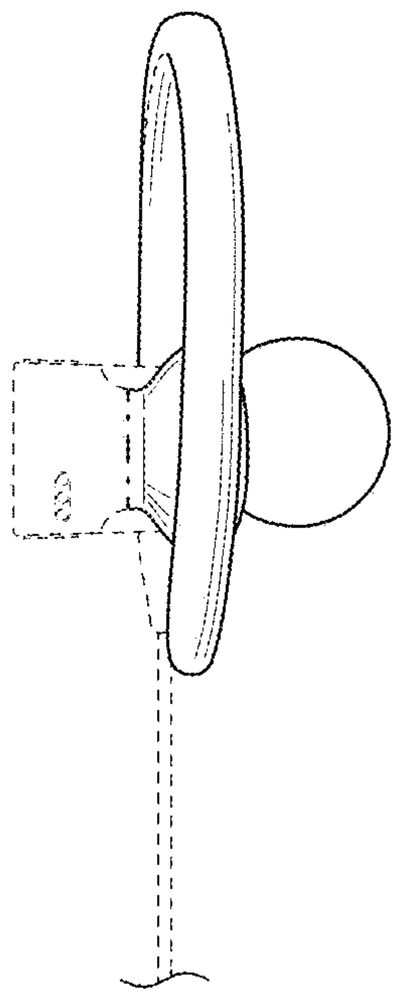

FIG. 4

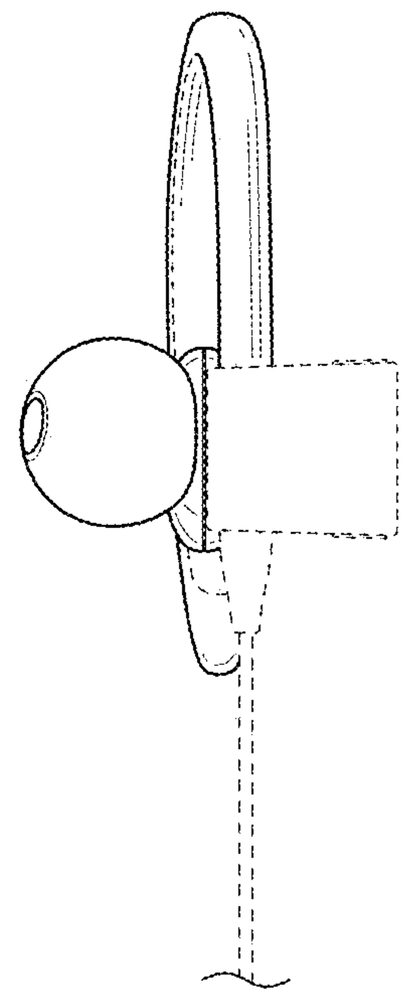

FIG. 5

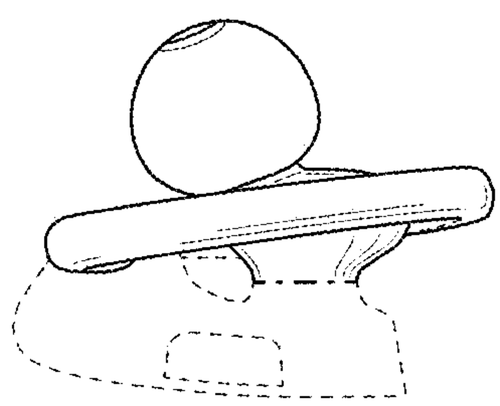

FIG. 6

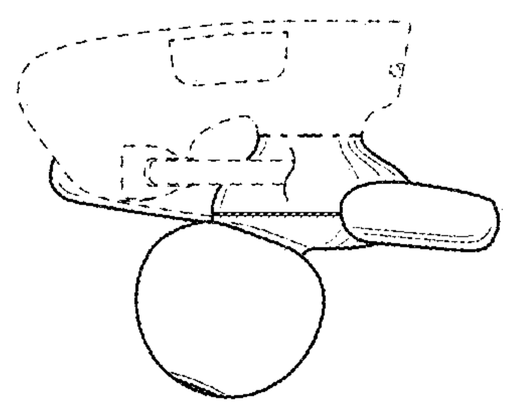

FIG. 7