US00D913967S

(12) United States Design Patent

Endo et al.

(10) Patent No.: US D913,967 S
(45) Date of Patent: ** Mar. 23, 2021

(54) **ELECTRICAL CONNECTOR COVER**

(71) Applicant: **Dai-ichi Seiko Co., Ltd.**, Kyoto (JP)

(72) Inventors: **Takayoshi Endo**, Shizuoka (JP); **Shuji Touno**, Shizuoka (JP); **Takumi Matsunaga**, Shizuoka (JP)

(73) Assignee: **Dai-ichi Seiko Co., Ltd.**, Kyoto (JP)

(**) Term: **15 Years**

(21) Appl. No.: **29/627,570**

(22) Filed: **Nov. 28, 2017**

(30) **Foreign Application Priority Data**

Jul. 20, 2017 (JP) 2017-015580

(51) **LOC (13) Cl.** **13-03**

(52) **U.S. Cl.**
USPC **D13/156**

(58) **Field of Classification Search**
USPC D13/156, 158, 120, 123, 154, 159, 173, D13/184, 199; D21/504; D8/353
CPC H01R 13/5213; H01R 13/424; H01R 13/436; H01R 13/443
See application file for complete search history.

(56) **References Cited**

U.S. PATENT DOCUMENTS

3,112,148	A	*	11/1963	Wochner	H02G 15/113 439/521
D232,346	S	*	8/1974	Cali	D8/353
D286,767	S	*	11/1986	Eriksson	D13/120
4,643,512	A	*	2/1987	Prodel	H01R 9/03 439/412
5,183,971	A	*	2/1993	Lafosse	H02B 1/21 174/129 B
5,480,312	A	*	1/1996	Watanabe	H01R 13/443 439/135
D411,984	S	*	7/1999	Wu	D13/156
D463,378	S	*	9/2002	Allada	D13/159
7,128,601	B2	*	10/2006	Suemitsu	H01R 13/567 439/521
D558,683	S	*	1/2008	Pape	D13/158
D593,498	S	*	6/2009	Mase	D13/154
7,799,991	B1	*	9/2010	Advey	H01R 13/5213 174/50
D675,166	S	*	1/2013	Hopper	D13/156
D724,028	S	*	3/2015	Norman	D13/123
D758,321	S	*	6/2016	Byrne	D13/156

(Continued)

FOREIGN PATENT DOCUMENTS

JP 749480 11/1998

Primary Examiner — Jennifer O King
(74) *Attorney, Agent, or Firm* — K&L Gates LLP; Louis C. Cullman; Georgia N. Kefallinos

(57) **CLAIM**

The ornamental design for an electrical connector cover, as shown and described.

DESCRIPTION

FIG. **1** is a front view of an electrical connector cover of our design.
FIG. **2** is a rear view of the electrical connector cover of FIG. **1**.
FIG. **3** is a first side view of the electrical connector cover of FIG. **1**.
FIG. **4** is a second side view of the electrical connector cover of FIG. **1**.
FIG. **5** is a top view of the electrical connector cover of FIG. **1**.
FIG. **6** is a bottom view of the electrical connector cover of FIG. **1**.
FIG. **7** is a front perspective view of electrical connector cover of FIG. **1**; and,
FIG. **8** is a rear perspective view of the electrical connector cover of FIG. **1**.

1 Claim, 8 Drawing Sheets

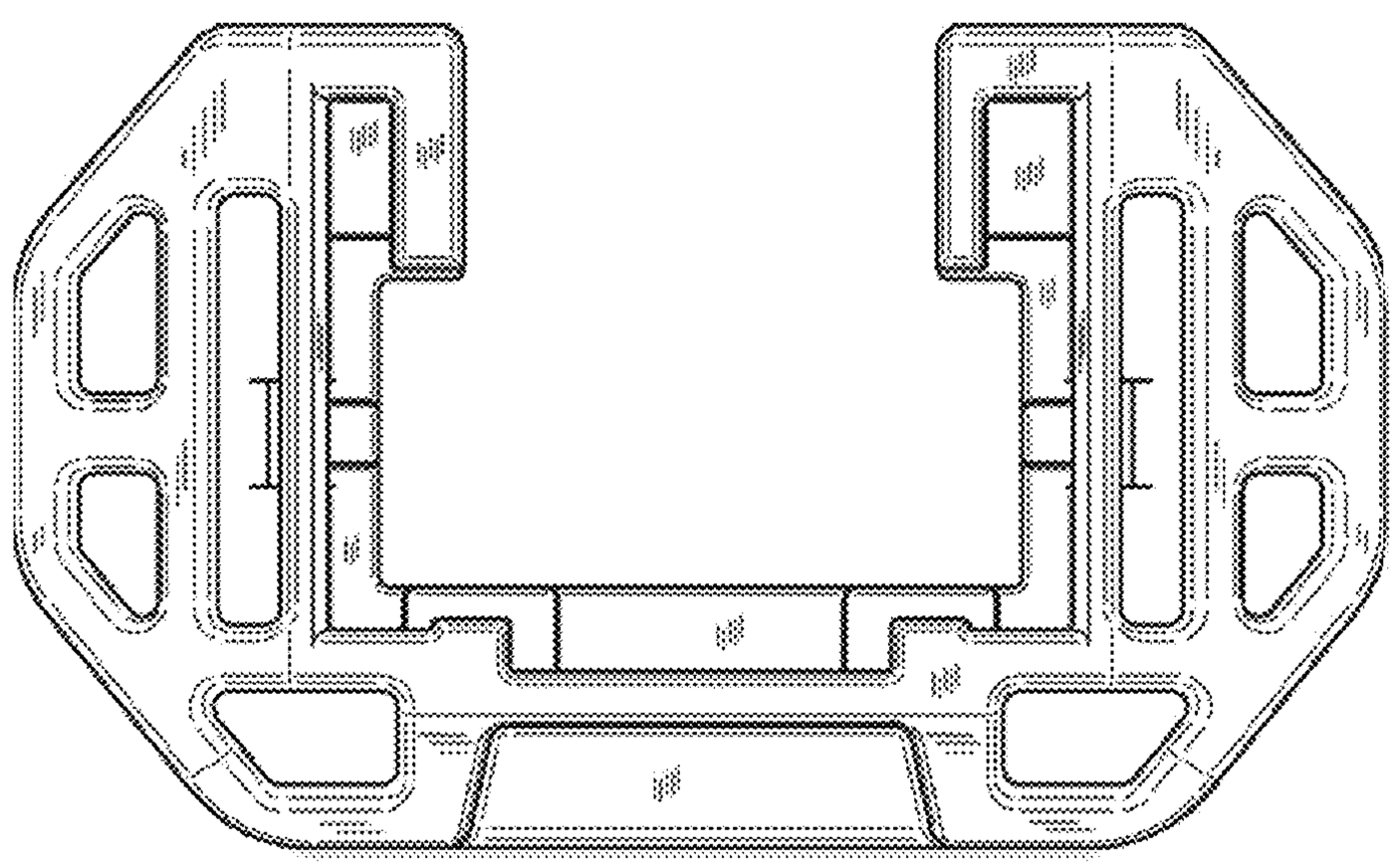

(56) **References Cited**

U.S. PATENT DOCUMENTS

D771,574	S	*	11/2016	Hultquist	D13/156
D772,815	S	*	11/2016	Chen	D13/118
D773,394	S	*	12/2016	Marinelli	D13/110
D797,204	S	*	9/2017	Liu	D21/504
10,151,890	B2	*	12/2018	Lipke	G02B 6/3895
10,153,582	B2	*	12/2018	Sato	H01R 13/58

* cited by examiner

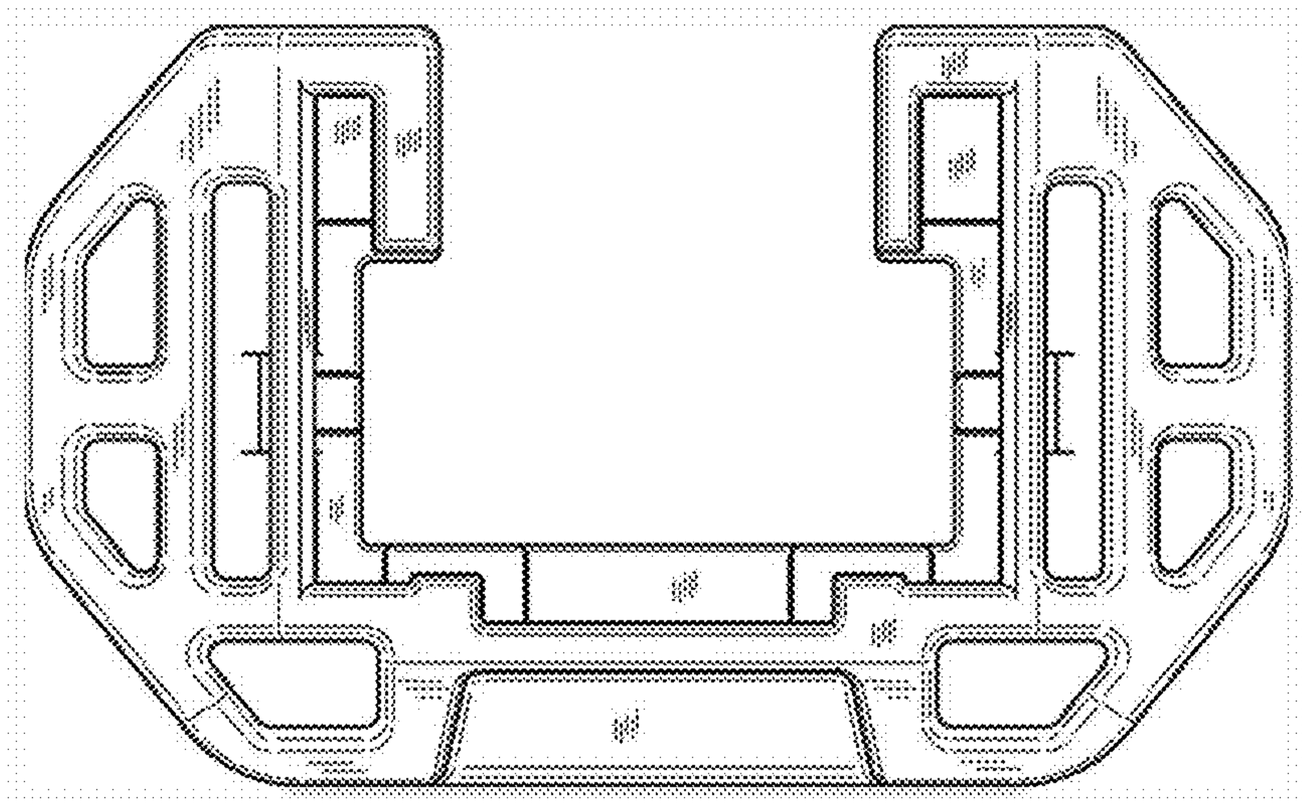

FIG. 1

FIG. 2

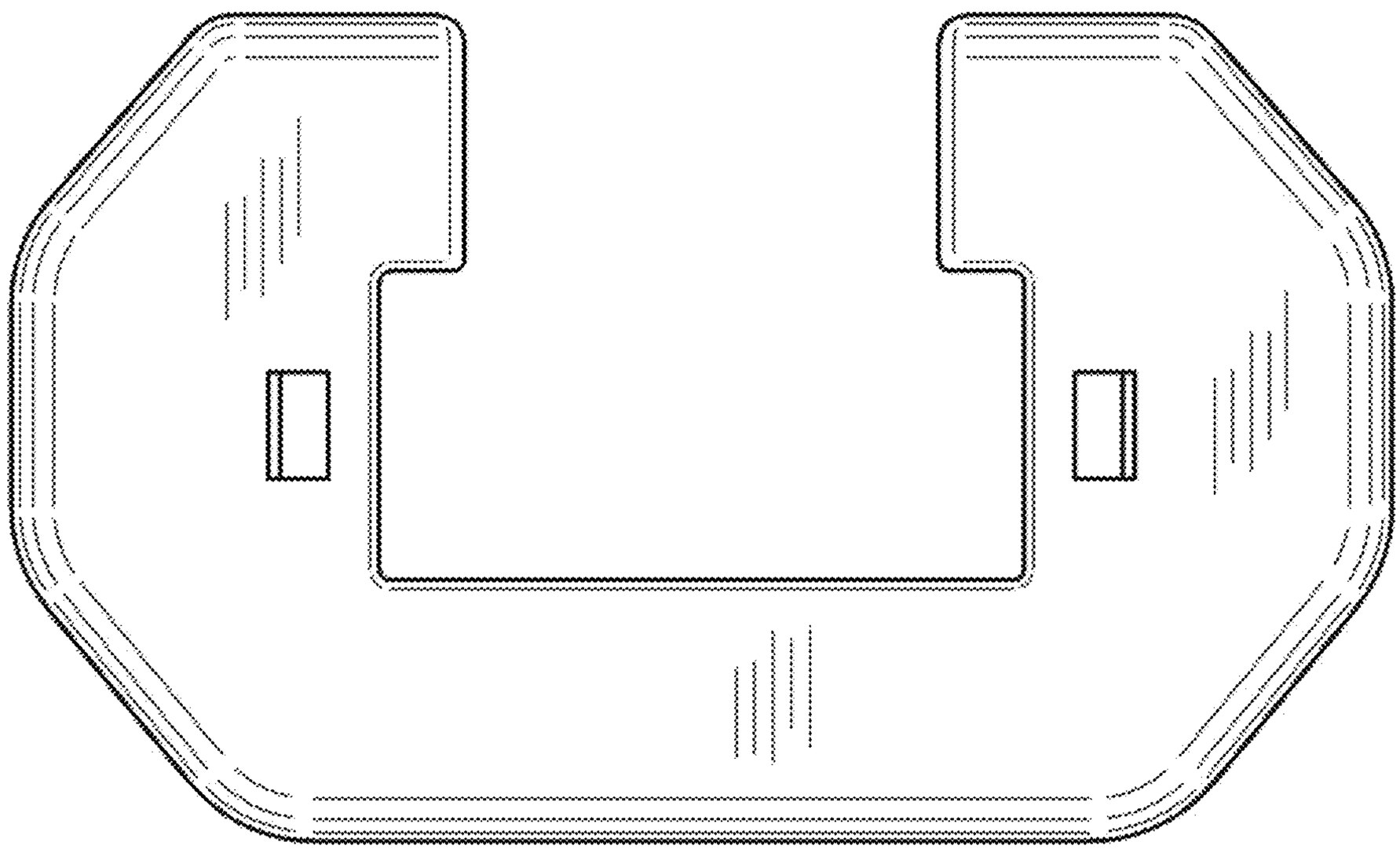

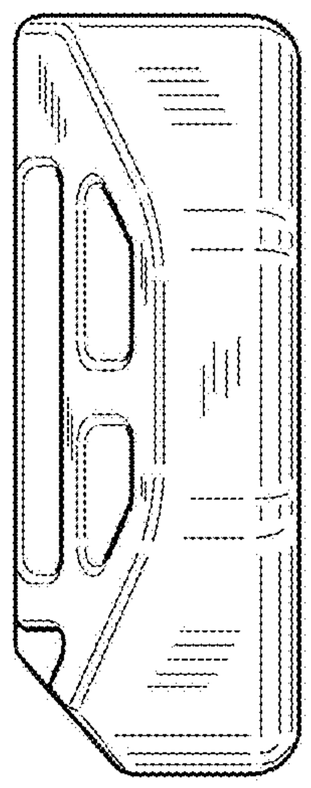

FIG. 3

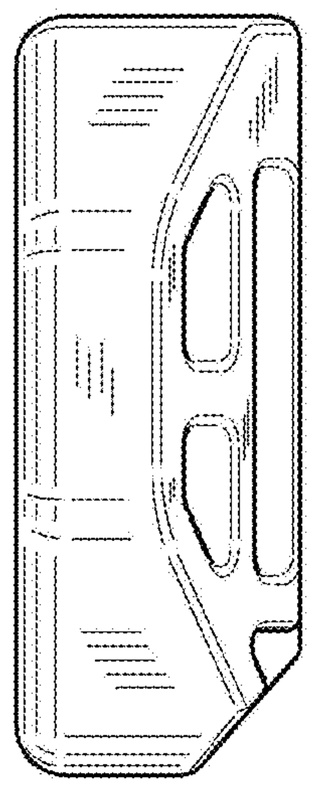

FIG. 4

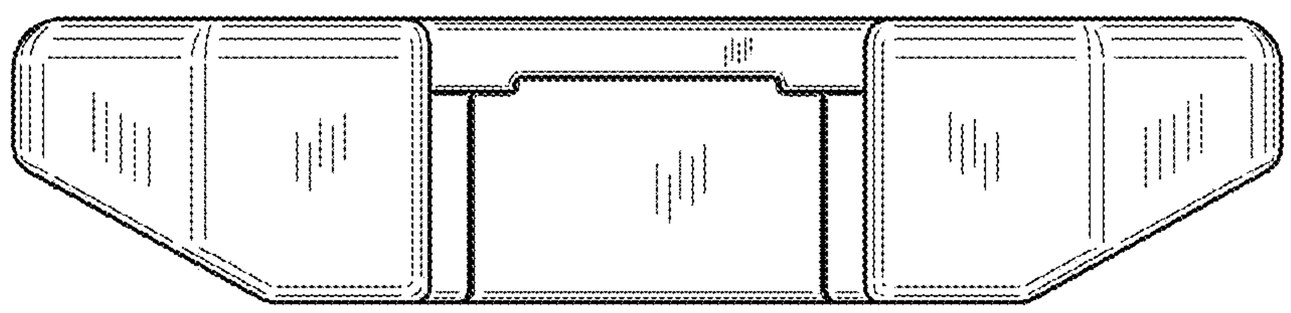

FIG. 5

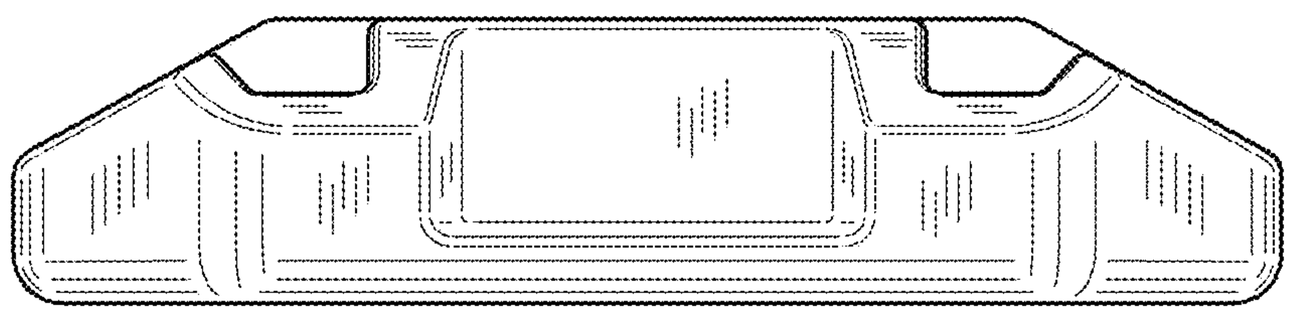

FIG. 6

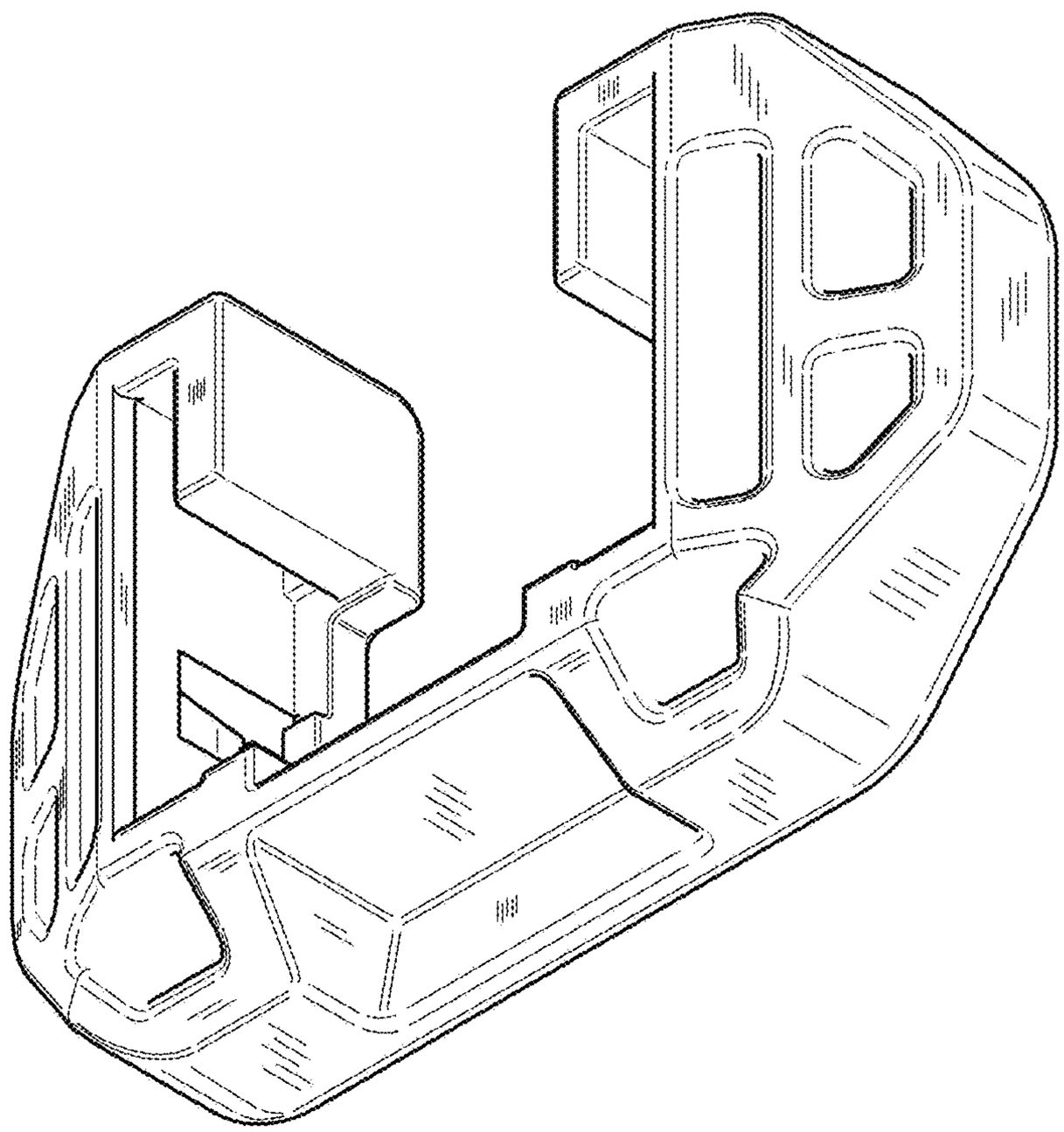

FIG. 7

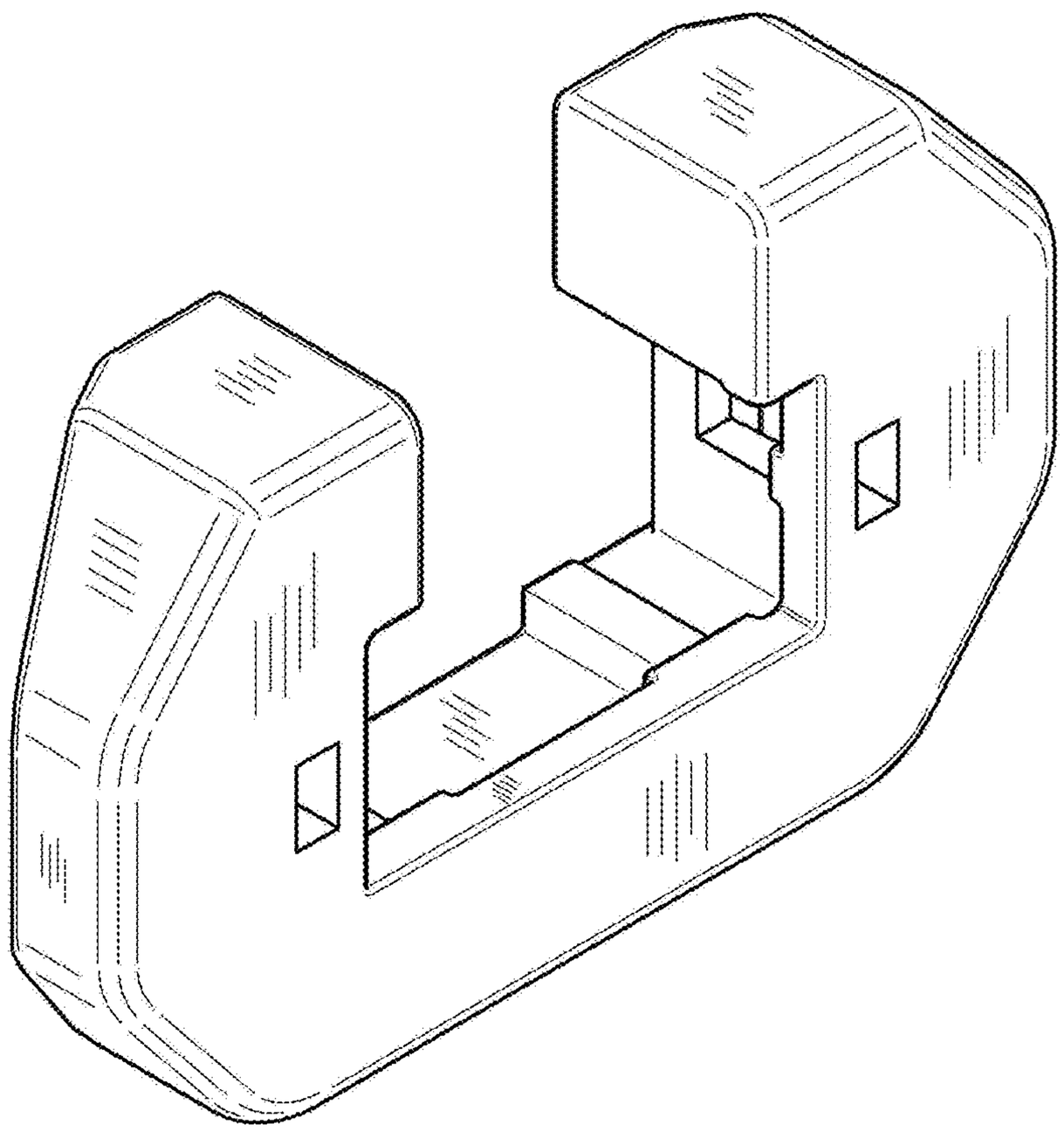

FIG. 8