US00D913765S

(12) **United States Design Patent**
Beckwith et al.

(10) **Patent No.: US D913,765 S**
(45) **Date of Patent: ** Mar. 23, 2021**

(54) **TORQUE WRENCH**

(71) Applicant: **APEX BRANDS, INC.**, Apex, NC (US)

(72) Inventors: **Jonathan Siebert Beckwith**, Raleigh, NC (US); **Ian Cunningham**, Charlotte, NC (US); **Brian Butler**, Charlotte, NC (US)

(73) Assignee: **APEX BRANDS, INC.**, Apex, NC (US)

(**) Term: **15 Years**

(21) Appl. No.: **29/714,186**

(22) Filed: **Nov. 21, 2019**

Related U.S. Application Data

(62) Division of application No. 29/648,974, filed on May 25, 2018, now Pat. No. Des. 873,638.

(51) **LOC (13) Cl.** **08-05**

(52) **U.S. Cl.**
USPC **D8/25**; D8/24

(58) **Field of Classification Search**
USPC D8/14–40, 51–56; 81/125.1, 177.1, 119, 81/124.7, 124.3, 186, 431, 176.15, 461.1, 81/99, 98, 100, 147, 185.1; 31/193, 252, 31/254
CPC B25B 13/14; B25B 13/06; B25B 13/04; B25B 13/46; B25B 13/00; B25B 7/02; B25B 13/48; B25B 13/16; B25B 13/505; B25B 13/5058; B25B 23/0007; B25B 13/28; B25B 23/0035; B25B 13/08; B25B 13/02; B25B 13/50; B25B 7/10; B25B 7/14;
(Continued)

(56) **References Cited**

U.S. PATENT DOCUMENTS

D605,913 S * 12/2009 Hsieh D8/24
9,561,583 B2 * 2/2017 Hsieh B25B 23/1427
(Continued)

FOREIGN PATENT DOCUMENTS

CN 302617600 * 6/2013
CN 303305219 * 12/2014
(Continued)

OTHER PUBLICATIONS

GEARWRENCH Store, ⅜" Drive Flex Head Micrometer Torque Wrench, Date first available Feb. 29, 2016, [online]retrieved Dec. 1, 2020, available from internet, https://www.amazon.com/GEARWRENCH-85086-Micrometer-Torque-Wrench/dp/B01HR2AAC6/ref=sr_1_4?dchild=1 (Year: 2016).*
(Continued)

Primary Examiner — Keli L Hill
Assistant Examiner — Sara S Sahneh
(74) *Attorney, Agent, or Firm* — Burr & Forman, LLP

(57) **CLAIM**

The ornamental design for the torque wrench, as shown and described.

DESCRIPTION

FIG. **1** is perspective view of a torque wrench in accordance with another embodiment of the present invention;
FIG. **2** is a front view of the torque wrench of FIG. **1**;
FIG. **3** is a rear view of the torque wrench of FIG. **1**;
FIG. **4** is a left side view of the torque wrench of FIG. **1**;
FIG. **5** is a right side view of the torque wrench of FIG. **1**;
FIG. **6** is a top view of the torque wrench of FIG. **1**; and,
FIG. **7** is a bottom view of the torque wrench of FIG. **1**.
(Continued)

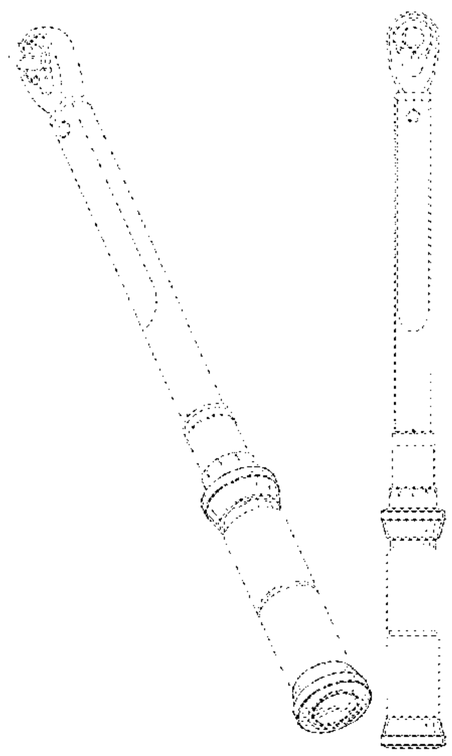

The broken lines of the torque wrench in FIGS. **1-7** are illustrative of portions of the torque wrench that form no part of the claimed design.

1 Claim, 4 Drawing Sheets

(58) **Field of Classification Search**
CPC B25B 5/147; B25B 5/085; B25B 27/00; B25B 23/142; B67B 7/00; B67B 7/18
See application file for complete search history.

(56) **References Cited**

U.S. PATENT DOCUMENTS

D871,870	S *	1/2020	Owen	D8/24
D873,638	S *	1/2020	Beckwith	D8/24
2008/0134800	A1*	6/2008	Escoe	B25B 23/1425 73/862.21
2010/0147118	A1*	6/2010	Hsieh	B25B 13/463 81/477
2010/0242691	A1*	9/2010	Hsieh	B25B 23/0007 81/467
2015/0047477	A1*	2/2015	Lai Li	B25B 23/1427 81/475
2015/0239109	A1*	8/2015	Hsieh	B25B 23/1427 81/478
2015/0375379	A1*	12/2015	Lin	B25B 23/1425 81/467
2018/0229352	A1*	8/2018	Guo	B25B 23/1427
2019/0039217	A1*	2/2019	Lin	B25B 23/1427
2020/0269399	A1*	8/2020	Hsieh	B25B 13/463

FOREIGN PATENT DOCUMENTS

CN	304244277	*	2/2017
CN	304990617	*	12/2017
EM	005823846-0001	*	11/2018

OTHER PUBLICATIONS

TEKTON Store, ⅜ Inch Drive Click Torque Wrench (10-80 ft.-lb.) |24330, Date first available Dec. 15, 2013, [online]retrieved Dec. 1, 2020, available from internet, https://www.amazon.com/TEKTON-24330-8-Inch-ft-lb-13-6-108-5/dp/B00FMPKAD0/ref=psdc_559968_t1_B01HR2AAC6 (Year: 2013).*

OEMTOOLS Store, 25687 Click Style Torque Wrench | 25-250 Ft/Lbs. of Torque (33.90-337.60 Nm), Date first available Dec. 6, 2010, [online]retrieved Dec. 1, 2020, available from internet, https://www.amazon.com/OEMTOOLS-25687-Torque-Wrench-Style-1/dp/B004FDJCHO/ref=pd_di_sccai_11?_encoding=UTF8&pd_rd (Year: 2010).*

LEXIVON Store, ½-Inch Drive Click Torque Wrench 10-150 Ft-Lb/13.6~203.5 Nm, Date first available Dec. 28, 2018, [online]retrieved Dec. 1, 2020, available from internet, https://www.amazon.com/LEXIVON-2-Inch-Torque-13-6-203-5-LX-183/dp/B07MP1Q3W8/ref=sr_1_2_sspa?_encoding=UTF8&c=ts&dchild (Year: 2018).*

* cited by examiner

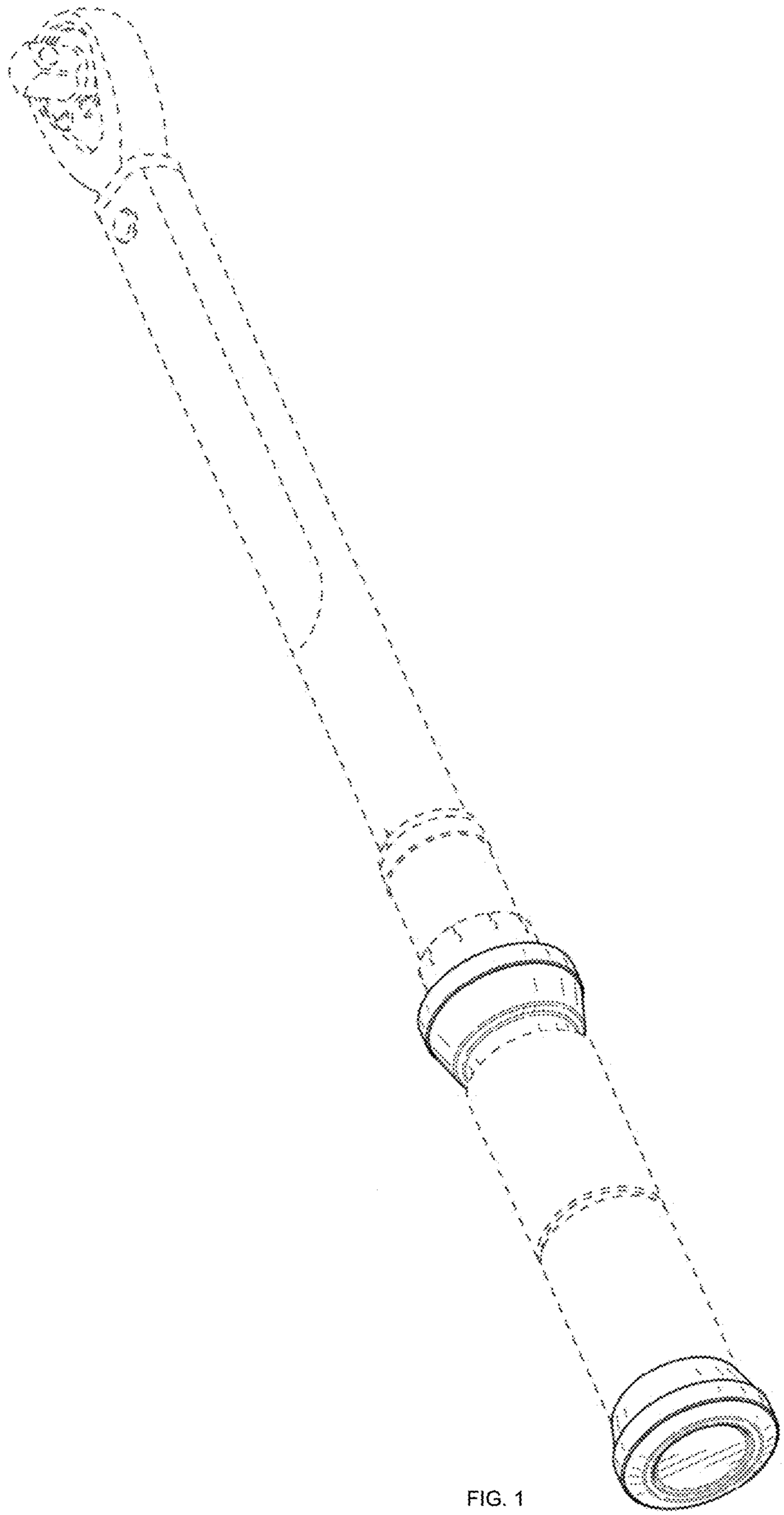

FIG. 1

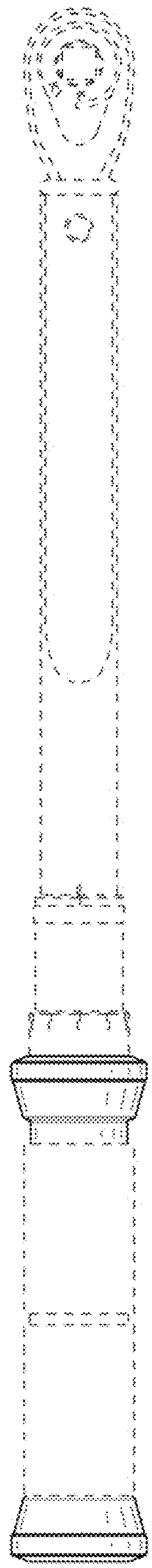

FIG. 2

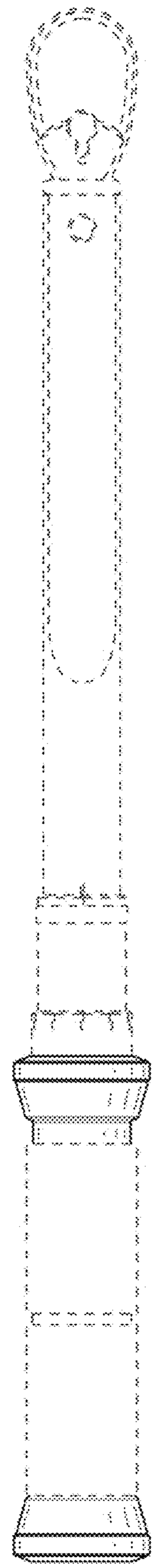

FIG. 3

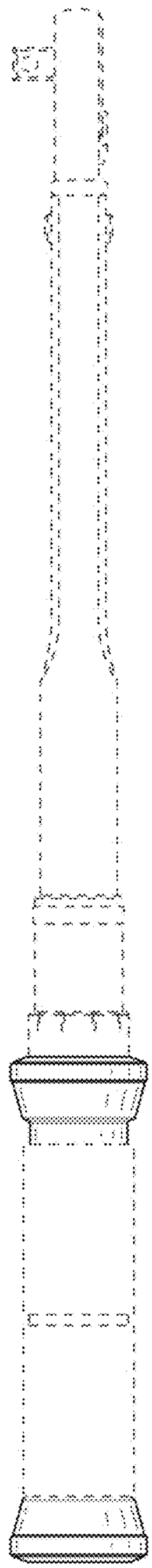

FIG. 4

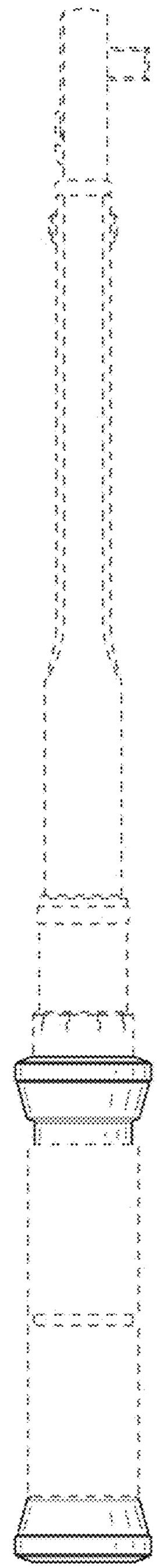

FIG. 5

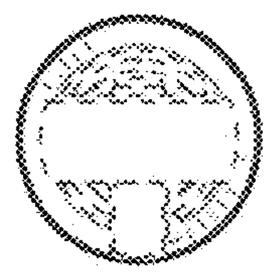

FIG. 6

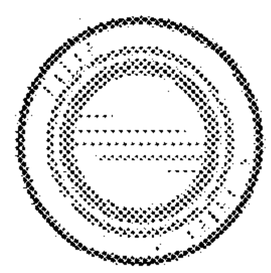

FIG. 7