US00D912505S

(12) United States Design Patent

Kirchen

(10) Patent No.: US D912,505 S
(45) Date of Patent: ** Mar. 9, 2021

(54) **PACKAGING**

(71) Applicant: **SIG Technology AG**, Neuhausen am Rheinfall (CH)

(72) Inventor: **Tim Kirchen**, Media, PA (US)

(73) Assignee: **SIG Technology AG**, Neuhausen am Rheinfall (CH)

(**) Term: **15 Years**

(21) Appl. No.: **29/717,163**

(22) Filed: **Dec. 16, 2019**

Related U.S. Application Data

(62) Division of application No. 29/650,036, filed on Jun. 4, 2018, now Pat. No. Des. 887,830.

(30) **Foreign Application Priority Data**

Apr. 17, 2018 (EM) 005237443

(51) **LOC (13) Cl.** **09-03**

(52) **U.S. Cl.**
USPC **D9/431**

(58) **Field of Classification Search**
USPC D9/414–423, 424–429, 430–433, 434, D9/456, 457, 711, 713, 721–722, 737,
(Continued)

(56) **References Cited**

U.S. PATENT DOCUMENTS

2,811,250 A 10/1957 Arneson
2,872,036 A 2/1959 Forrer
(Continued)

OTHER PUBLICATIONS

Finland Design Publication, vol. 10, (Oct. 15, 1997), p. 32, 231/97
(Patent Office Design Section Public Material No. HH10061346.
(Continued)

Primary Examiner — Vy N Koenig
(74) *Attorney, Agent, or Firm* — The Webb Law Firm

(57) **CLAIM**

The ornamental design for a packaging, as shown and described.

DESCRIPTION

FIG. **1** is an upper perspective view of a packaging showing my new design in accordance with a first embodiment of the invention;
FIG. **2** is a front elevation view thereof;
FIG. **3** is a rear elevation view thereof;
FIG. **4** is a left side elevation view thereof;
FIG. **5** is a right side elevation view thereof;
FIG. **6** is a top view thereof;
FIG. **7** is a bottom view thereof;
FIG. **8** is an upper perspective view of a packaging showing my new design in accordance with a second embodiment of the invention;
FIG. **9** is a front elevation view thereof;
FIG. **10** is a rear elevation view thereof;
FIG. **11** is a left side elevation view thereof;
FIG. **12** is a right side elevation view thereof;
FIG. **13** is a top view thereof;
FIG. **14** is a bottom view thereof;
FIG. **15** is an upper perspective view of a packaging showing my new design in accordance with a third embodiment of the invention;
FIG. **16** is a front elevation view thereof;
FIG. **17** is a rear elevation view thereof;
FIG. **18** is a left side elevation view thereof;
FIG. **19** is a right side elevation view thereof;
FIG. **20** is a top view thereof; and,
FIG. **21** is a bottom view thereof.

1 Claim, 21 Drawing Sheets

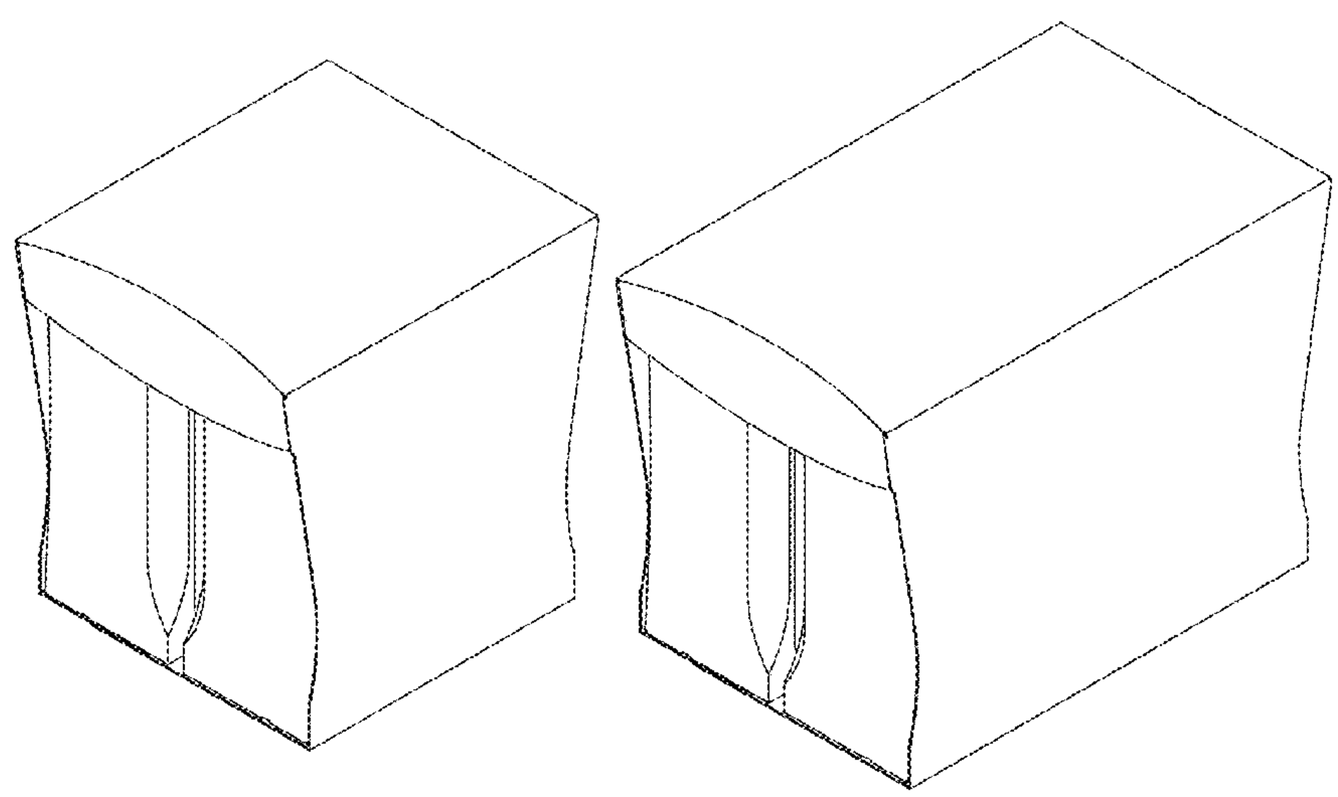

(58) **Field of Classification Search**
USPC D9/756, 758, 759, 760; D3/272–274, D3/290, 304, 305, 315; D20/10, 22, 27, D20/40, 42
CPC ... B65D 5/00; B65D 5/12; B65D 5/18; B65D 5/20
See application file for complete search history.

(56) **References Cited**

U.S. PATENT DOCUMENTS

2,922,561	A		1/1960	Currivan	
3,156,404	A		11/1964	Wood	
3,229,892	A		1/1966	Weiss	
3,252,649	A		5/1966	Graser et al.	
3,257,066	A		6/1966	Williams	
3,278,075	A		10/1966	Weiss	
3,292,843	A		12/1966	Chidsey et al.	
3,339,723	A		9/1967	Wood	
3,355,012	A		11/1967	Weiss	
3,367,557	A		2/1968	Farquhar	
3,375,968	A		4/1968	Weiss	
3,381,881	A		5/1968	Ganz et al.	
3,429,496	A		2/1969	Hickin	
3,462,011	A		8/1969	Farquhar	
3,517,876	A		6/1970	Stout	
5,520,283	A		5/1996	Sutherland	
5,690,275	A		11/1997	Bose et al.	
D395,007	S		6/1998	Miller et al.	
D395,601	S		6/1998	Miller et al.	
D415,423	S		10/1999	Miller et al.	
6,019,220	A	*	2/2000	Sutherland	B65D 71/36 206/196
D427,522	S	*	7/2000	Ponzio	D9/754
D702,117	S		4/2014	Dagnino	
D826,711	S	*	8/2018	Boersma	B65D 5/0209 D9/432
D842,089	S		3/2019	Nuamu et al.	
D854,412	S	*	7/2019	Smalley	D9/431
D861,483	S	*	10/2019	Smalley	D9/431
D867,900	S	*	11/2019	Thompson	D9/754
D881,690	S	*	4/2020	Smalley	D9/418
D885,887	S	*	6/2020	Thompson	D9/430
D887,830	S	*	6/2020	Kirchen	D9/431

OTHER PUBLICATIONS

Prepared Foods, No. 03, vol. 174, p. 60 (Patent Office Design Section Public Material No. HB17005491.

* cited by examiner

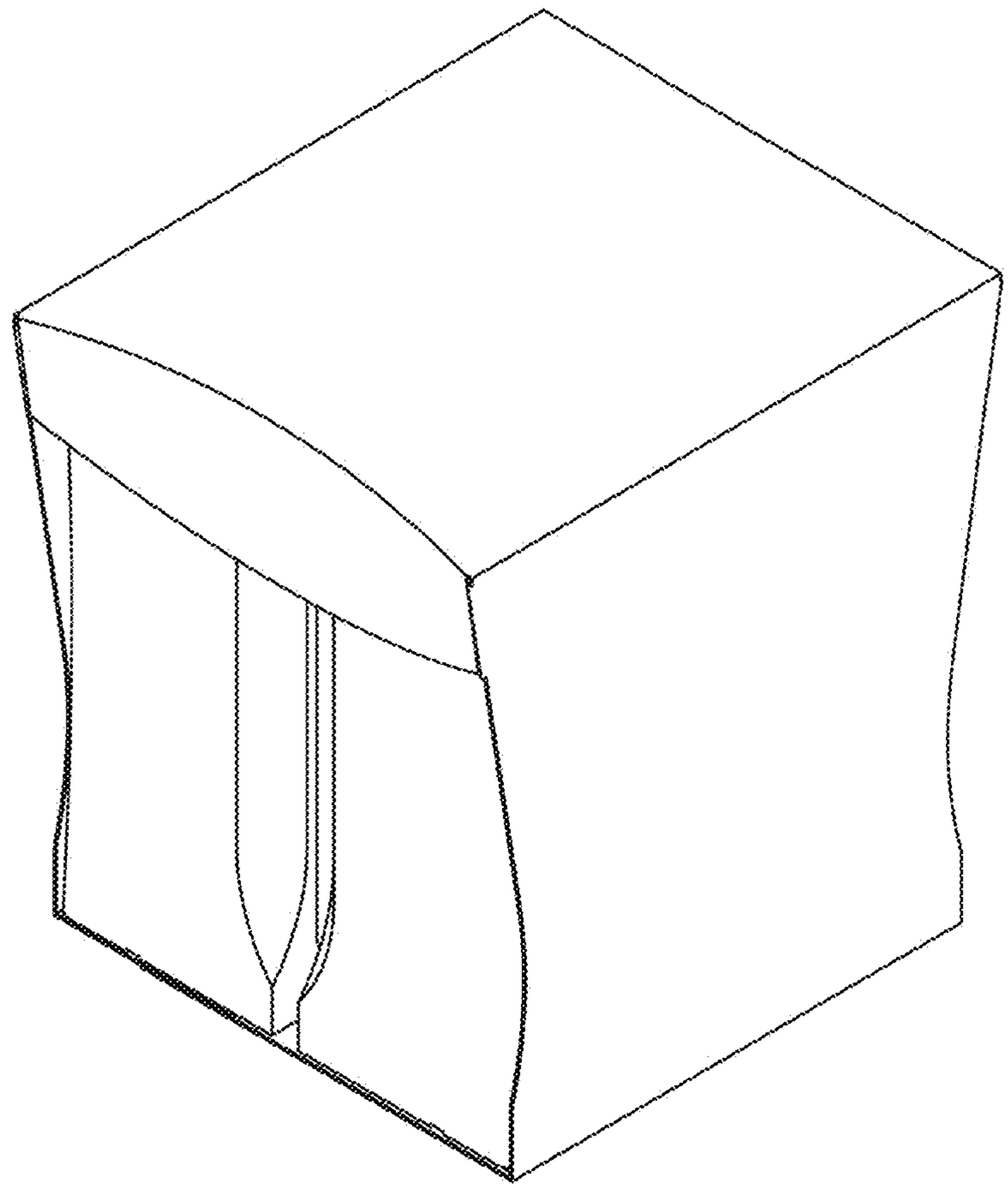

FIG. 1

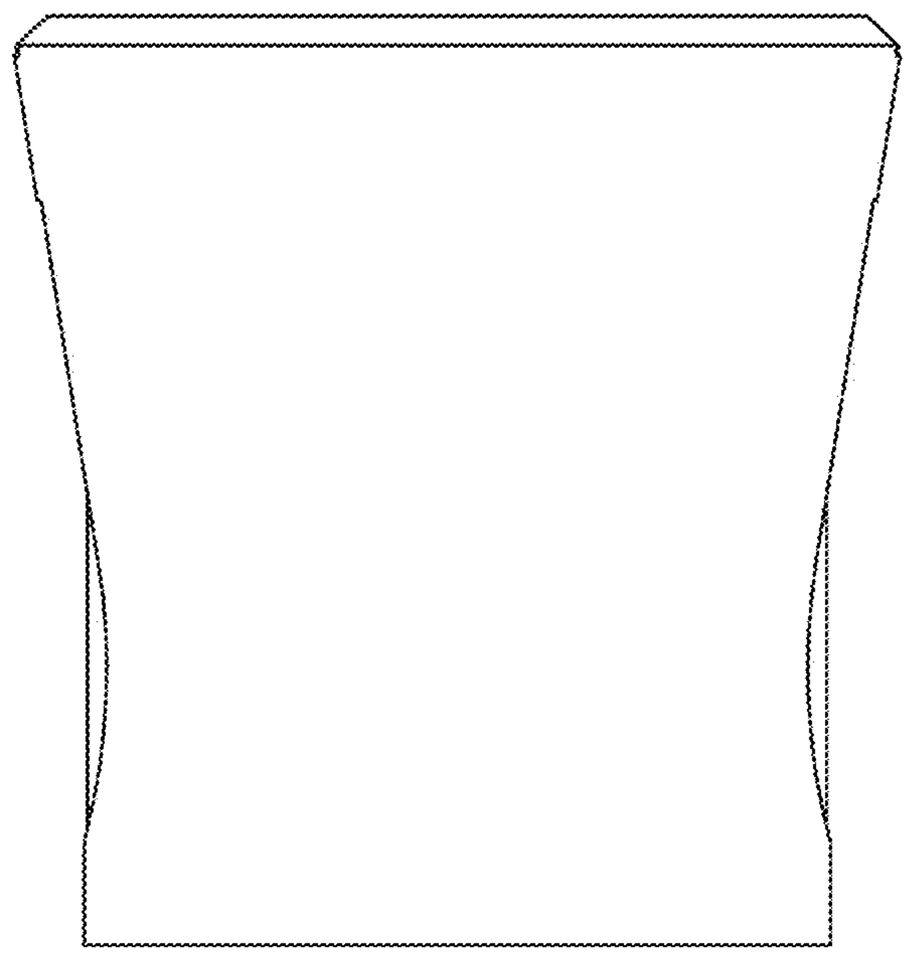

FIG. 2

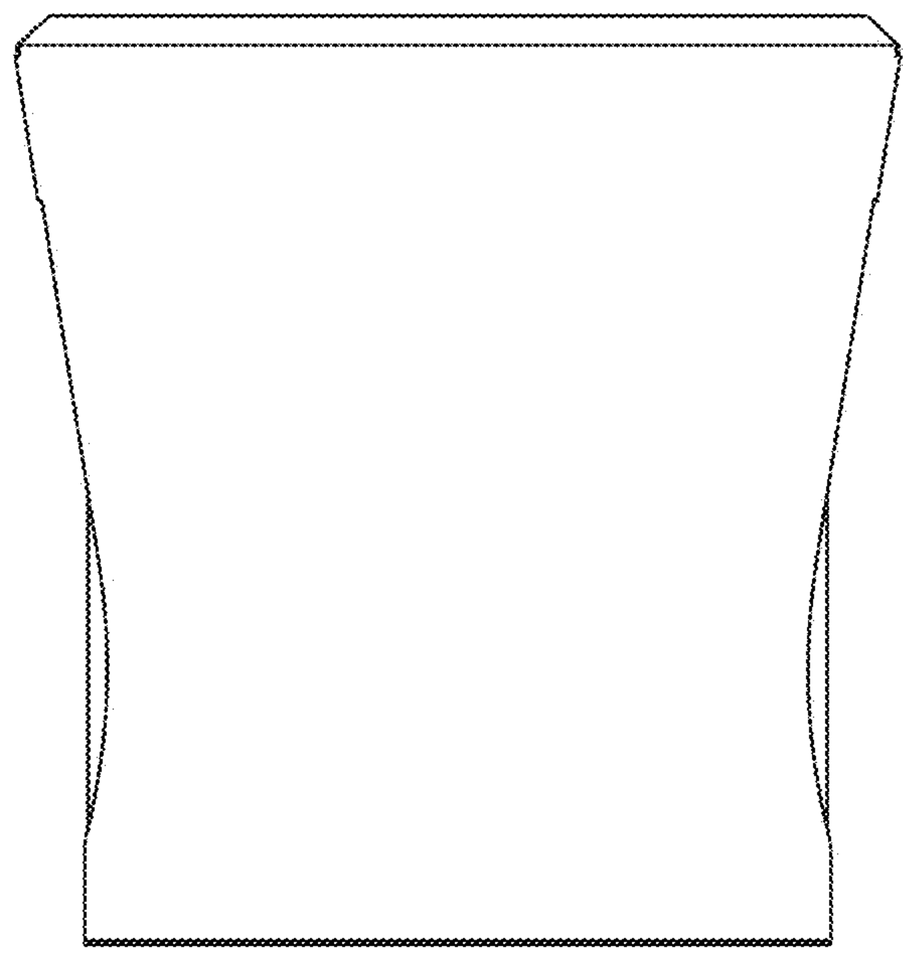

FIG. 3

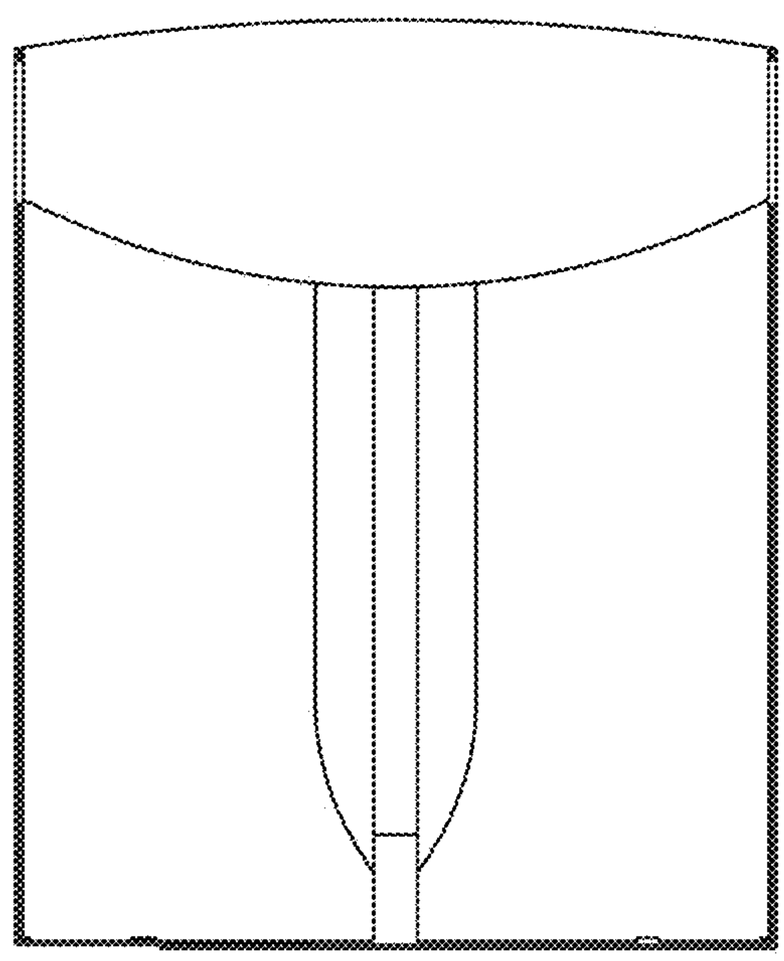

FIG. 4

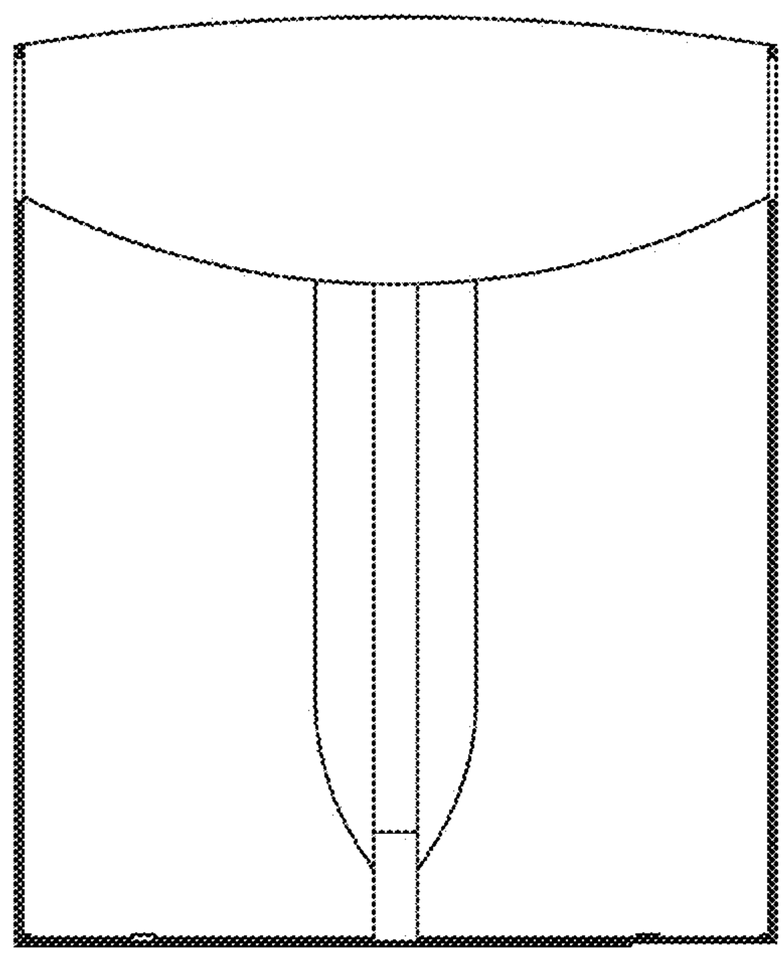

FIG. 5

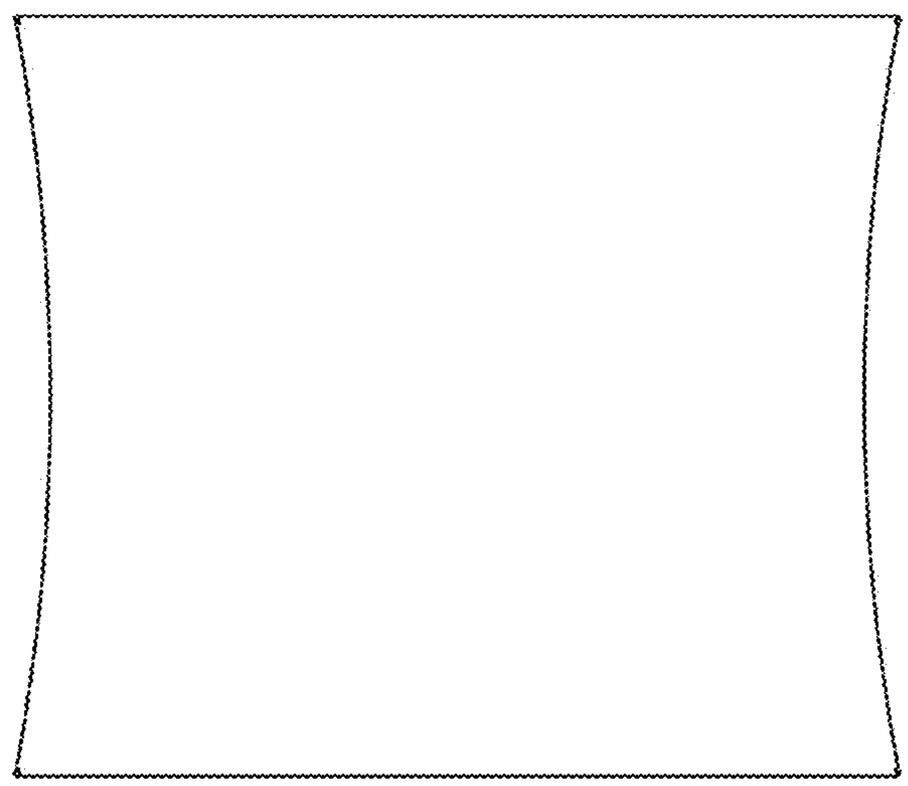

FIG. 6

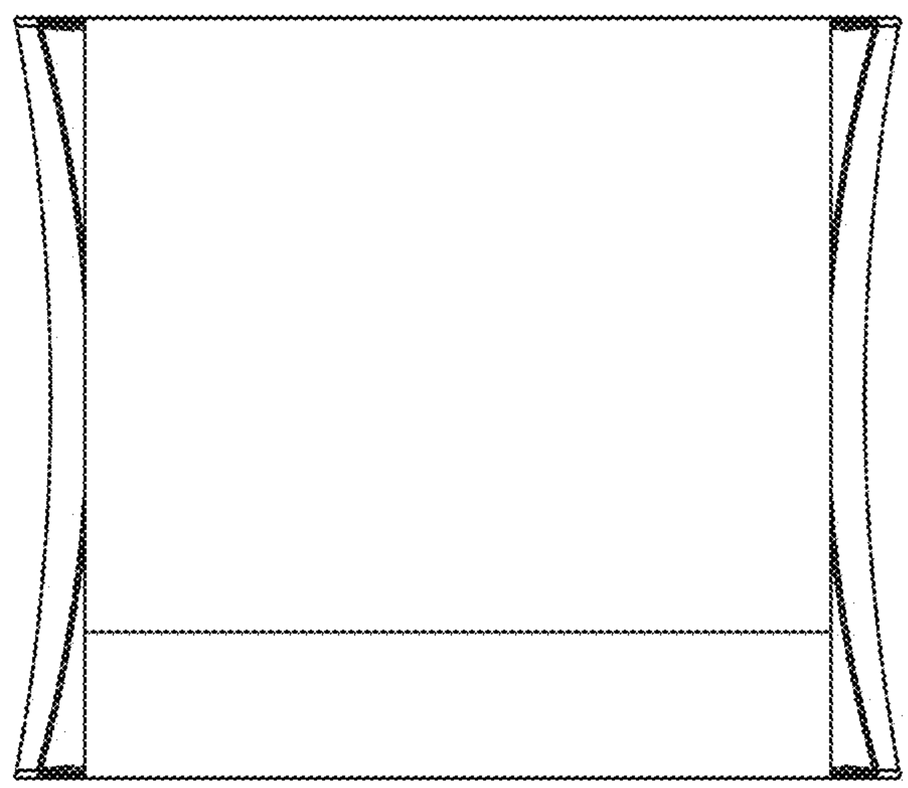

FIG. 7

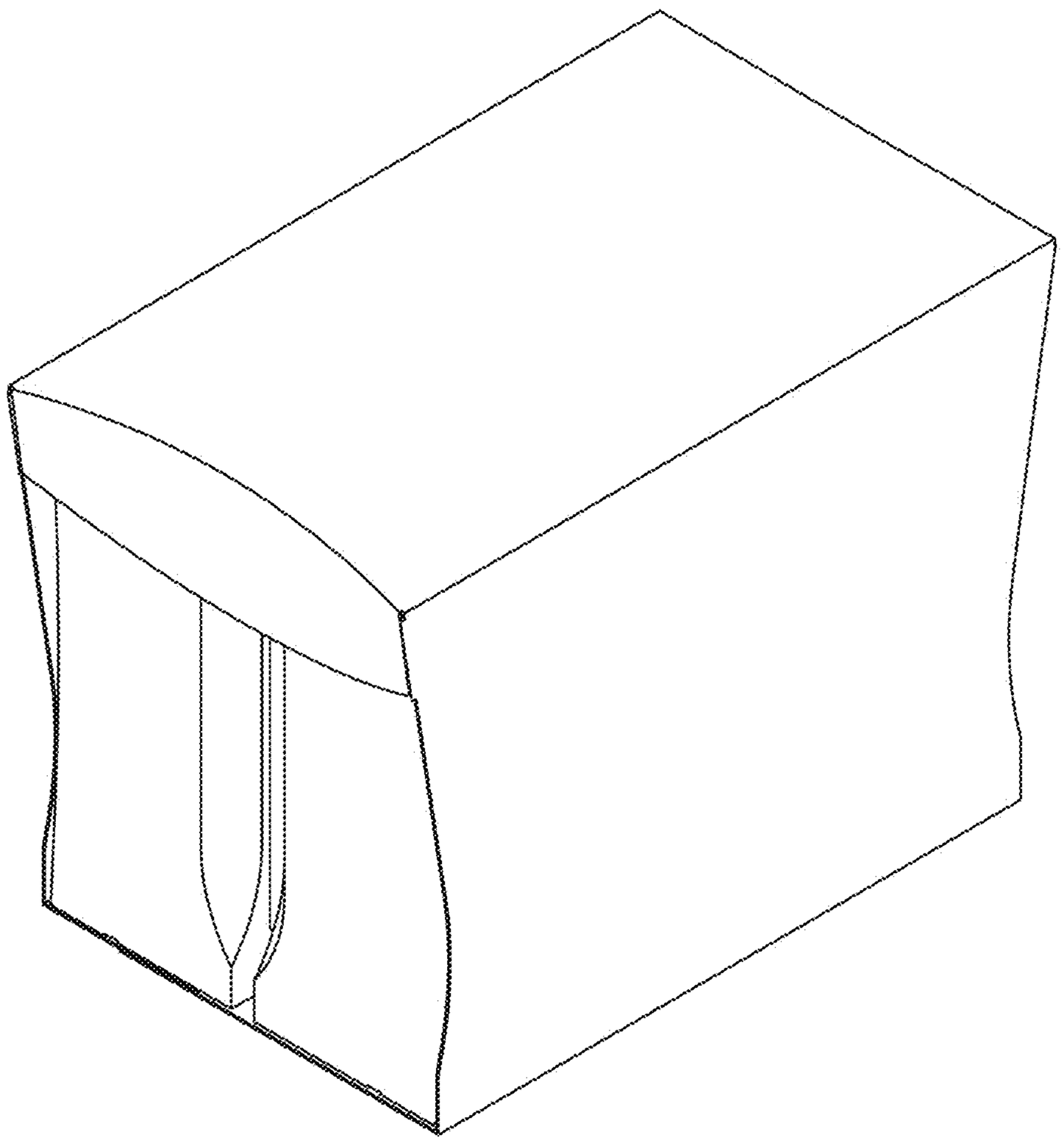

FIG. 8

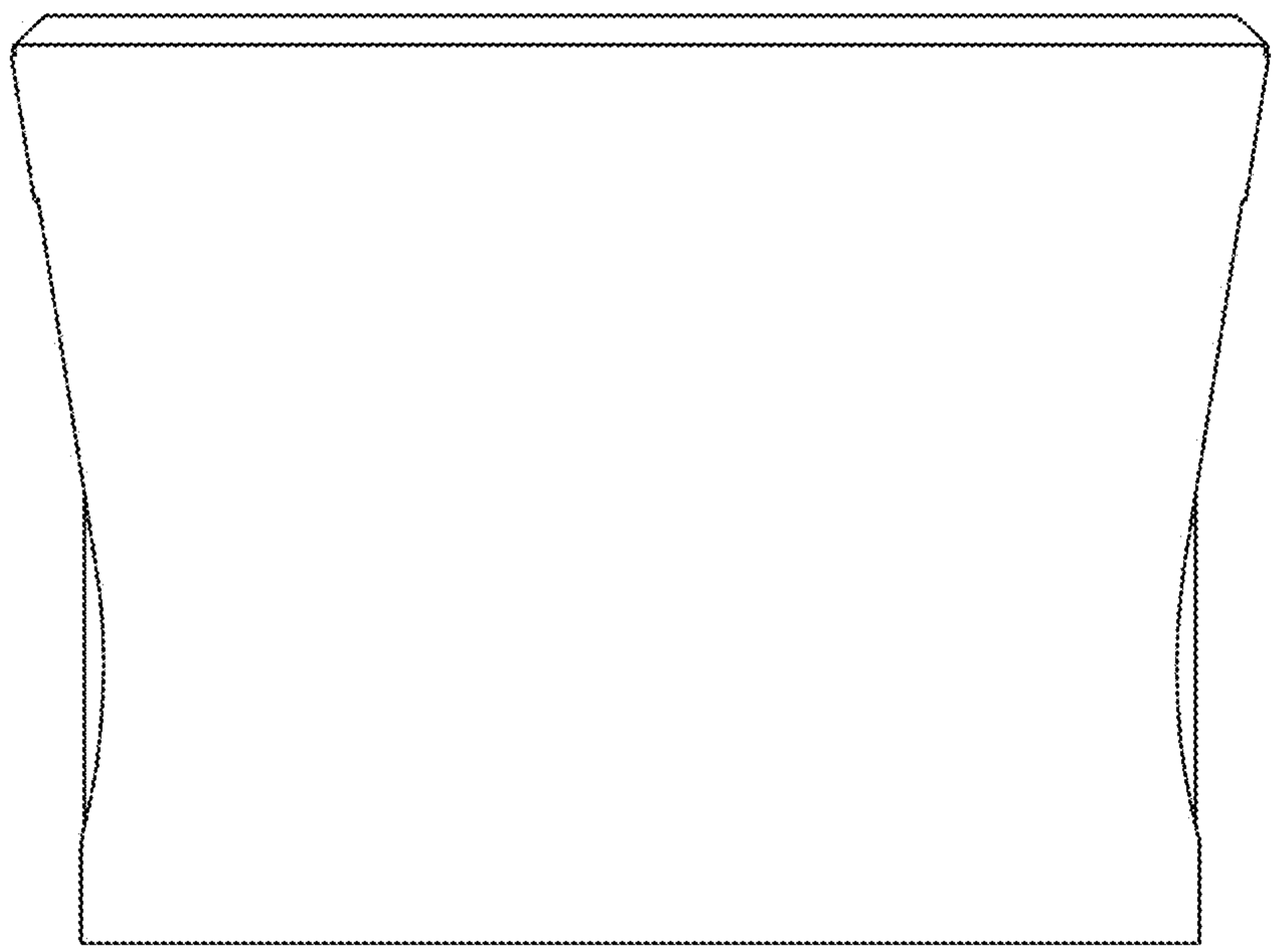

FIG. 9

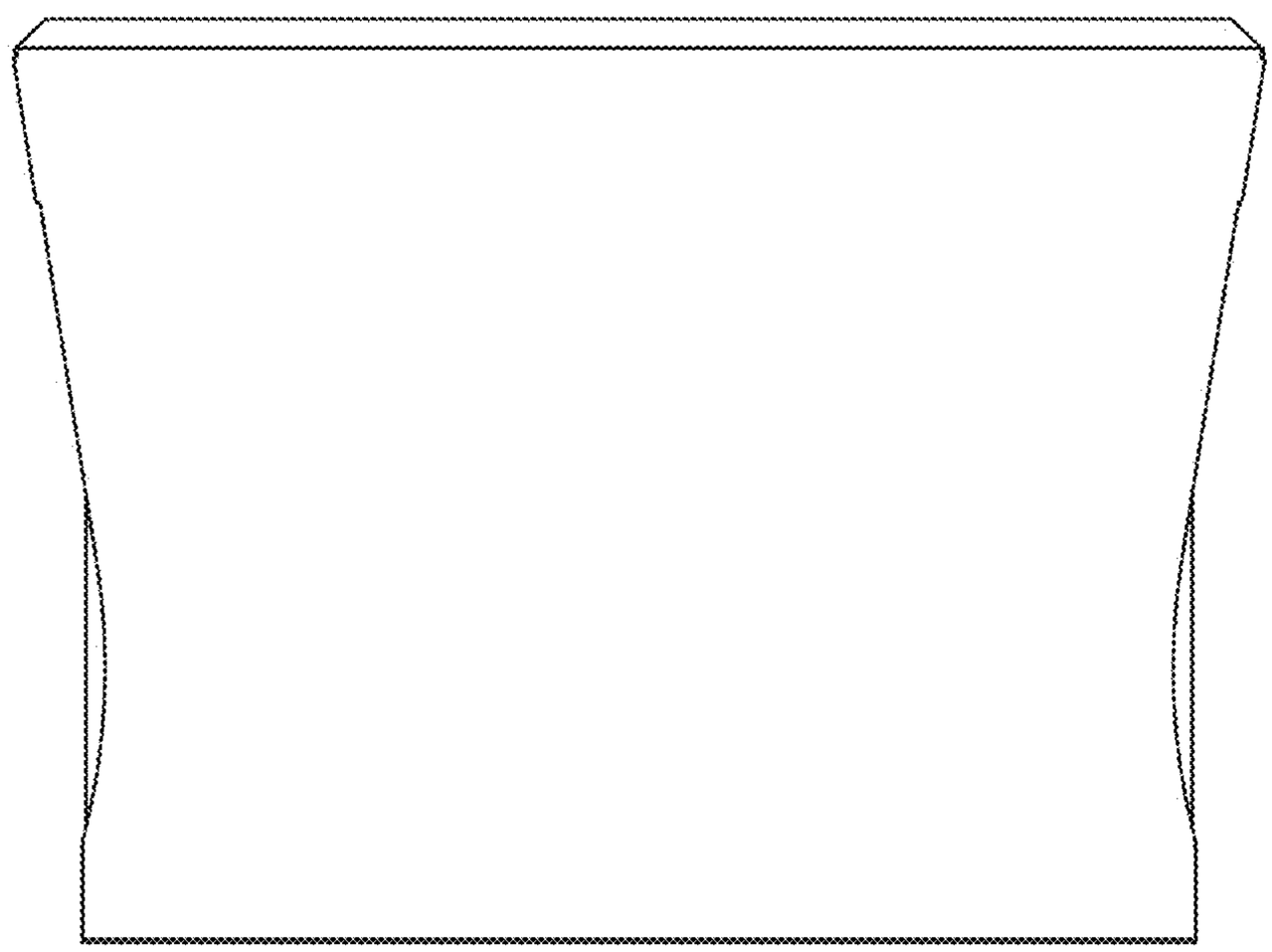

FIG. 10

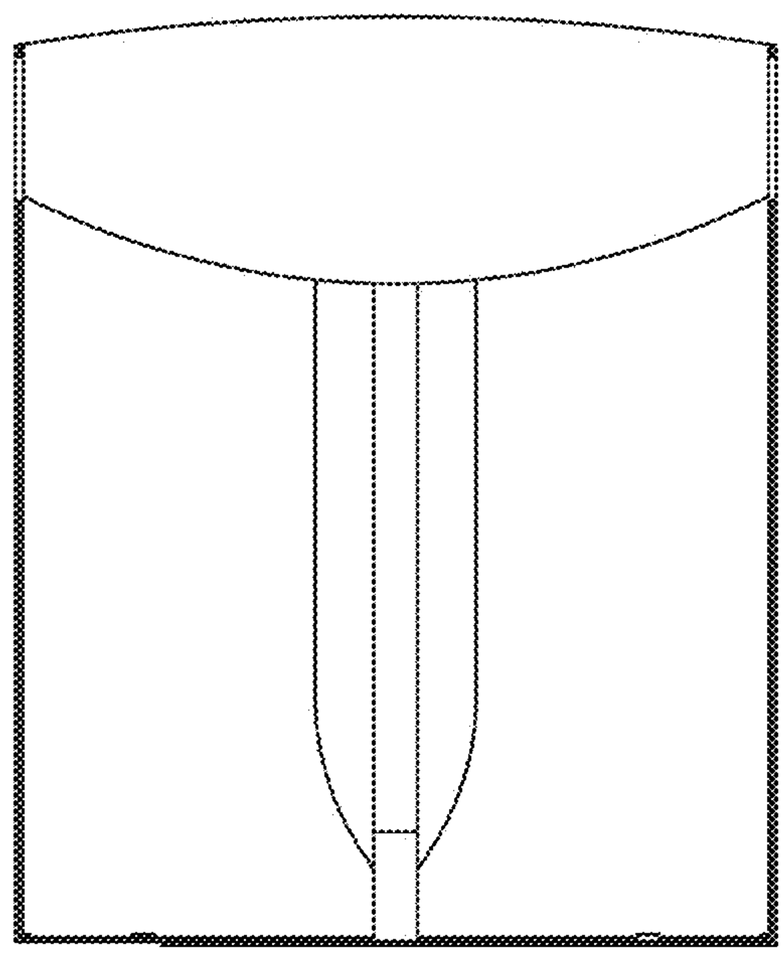

FIG. 11

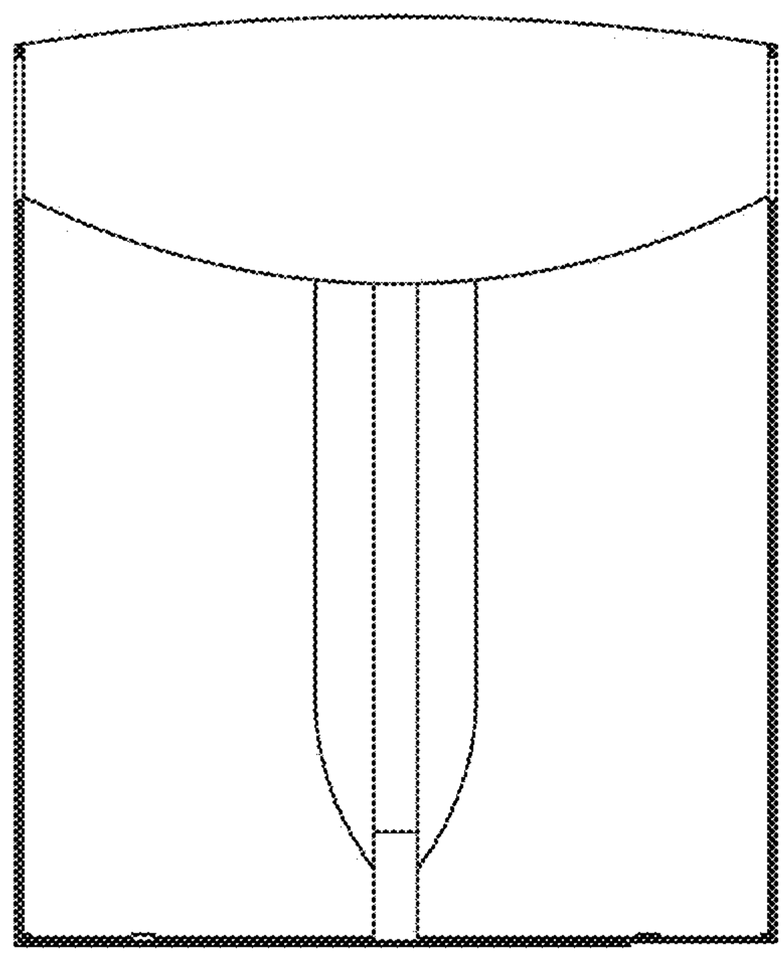

FIG. 12

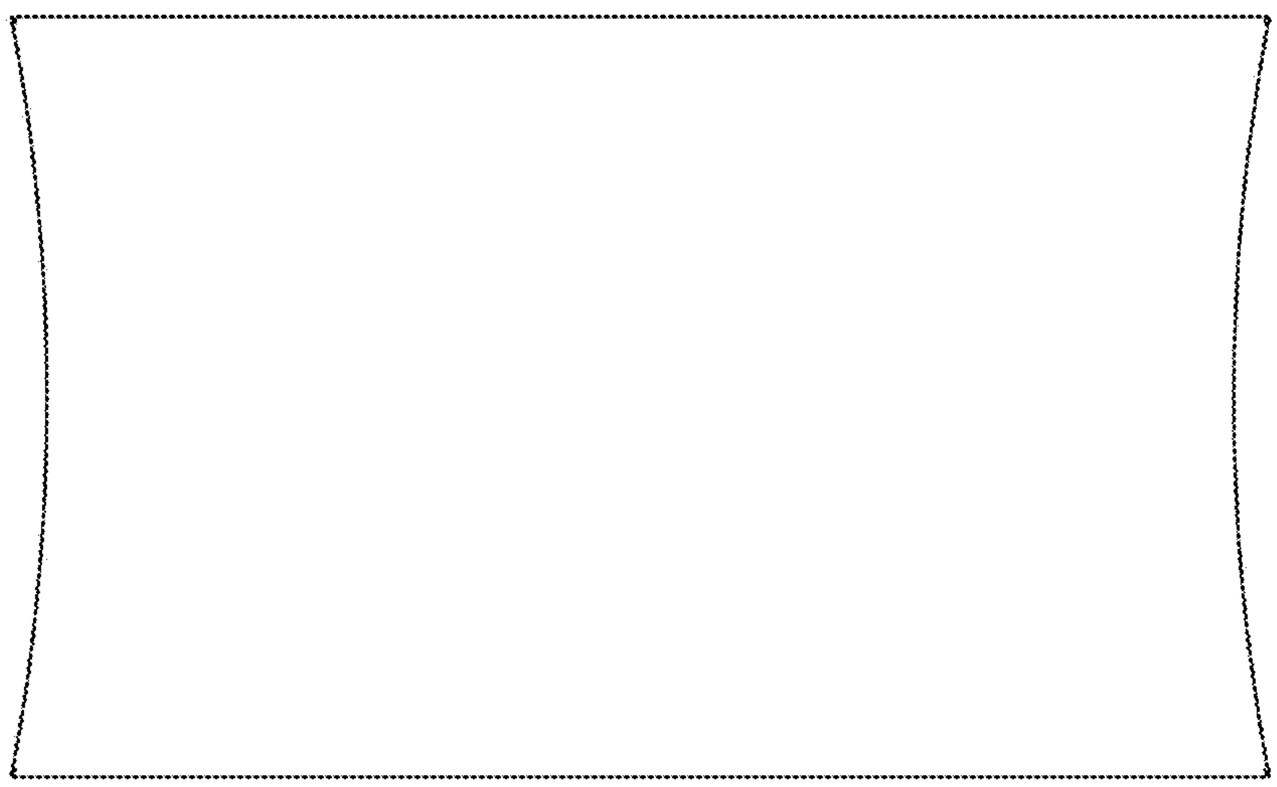

FIG. 13

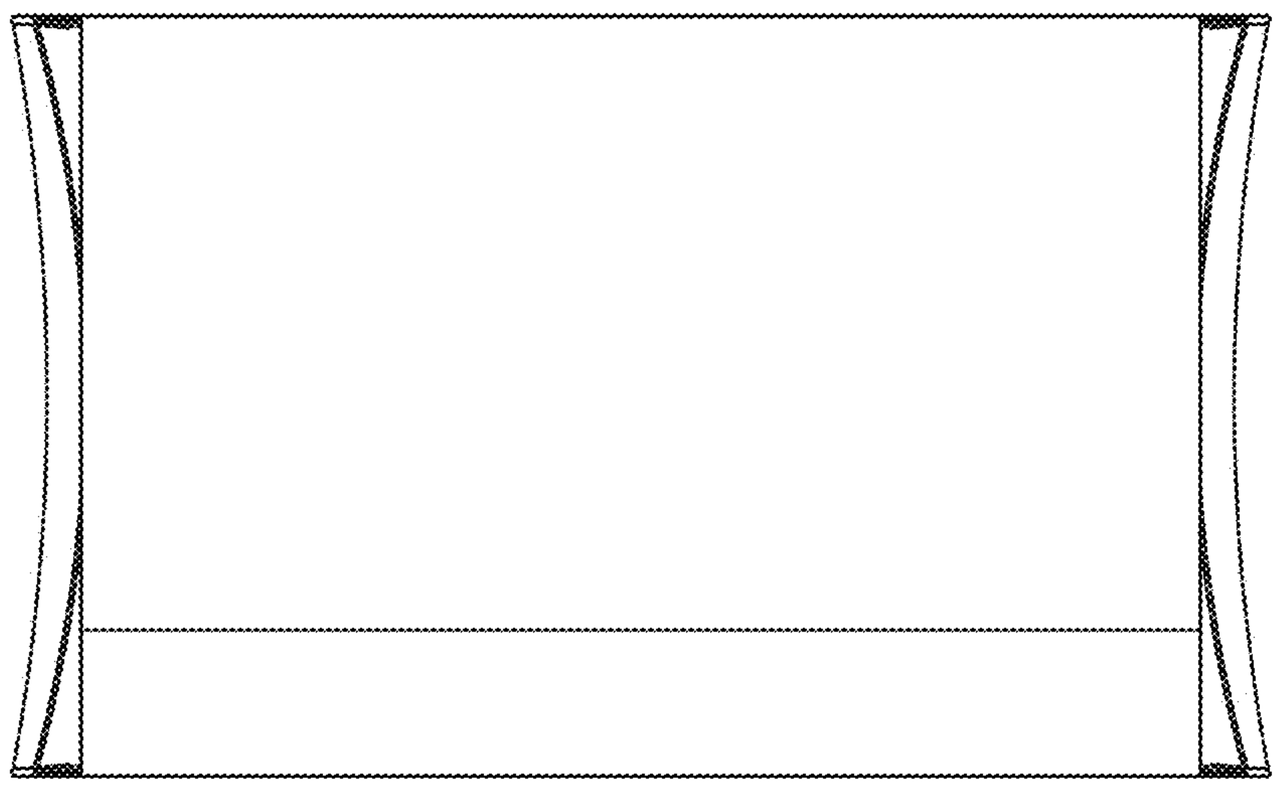

FIG. 14

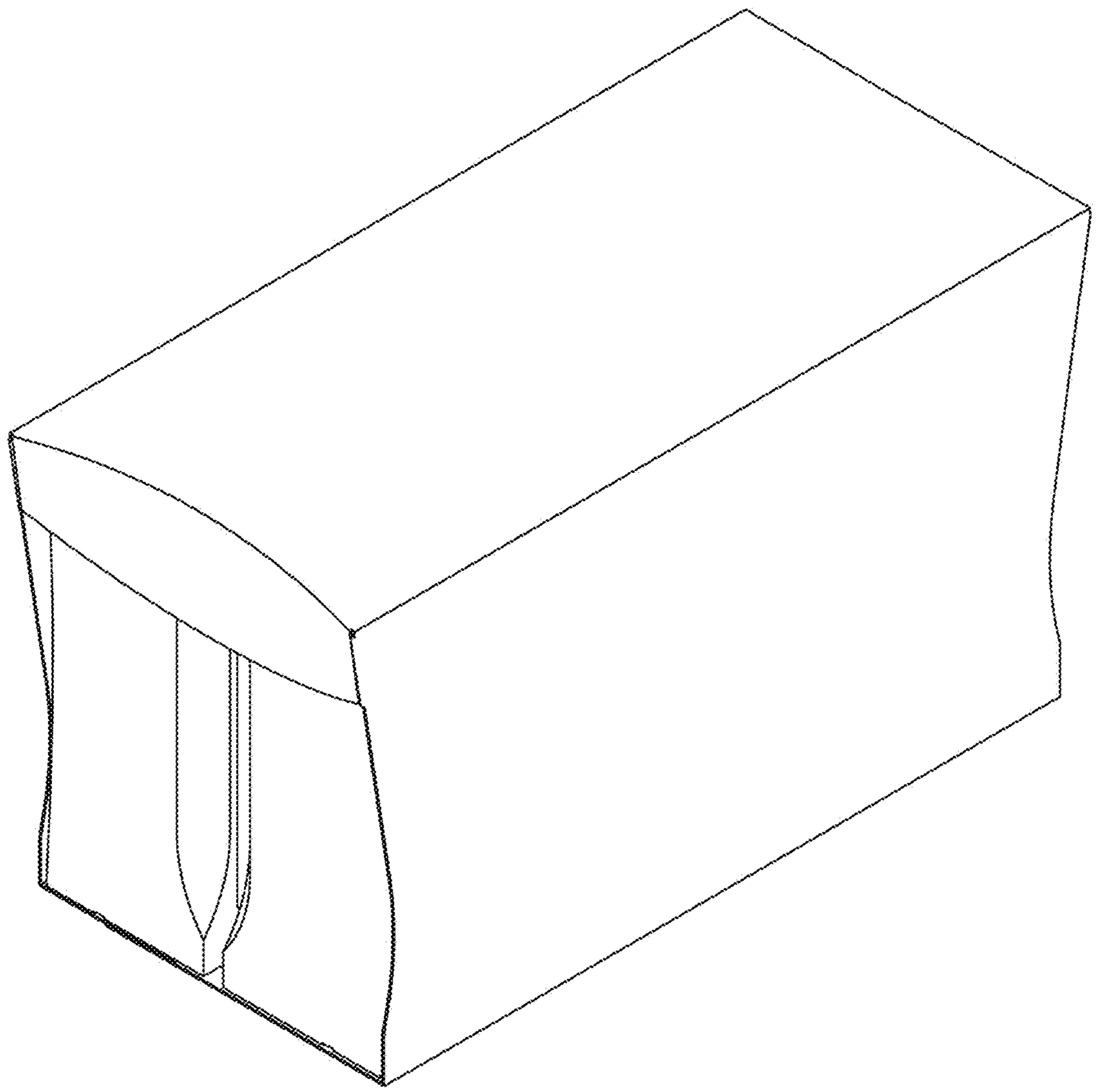

FIG. 15

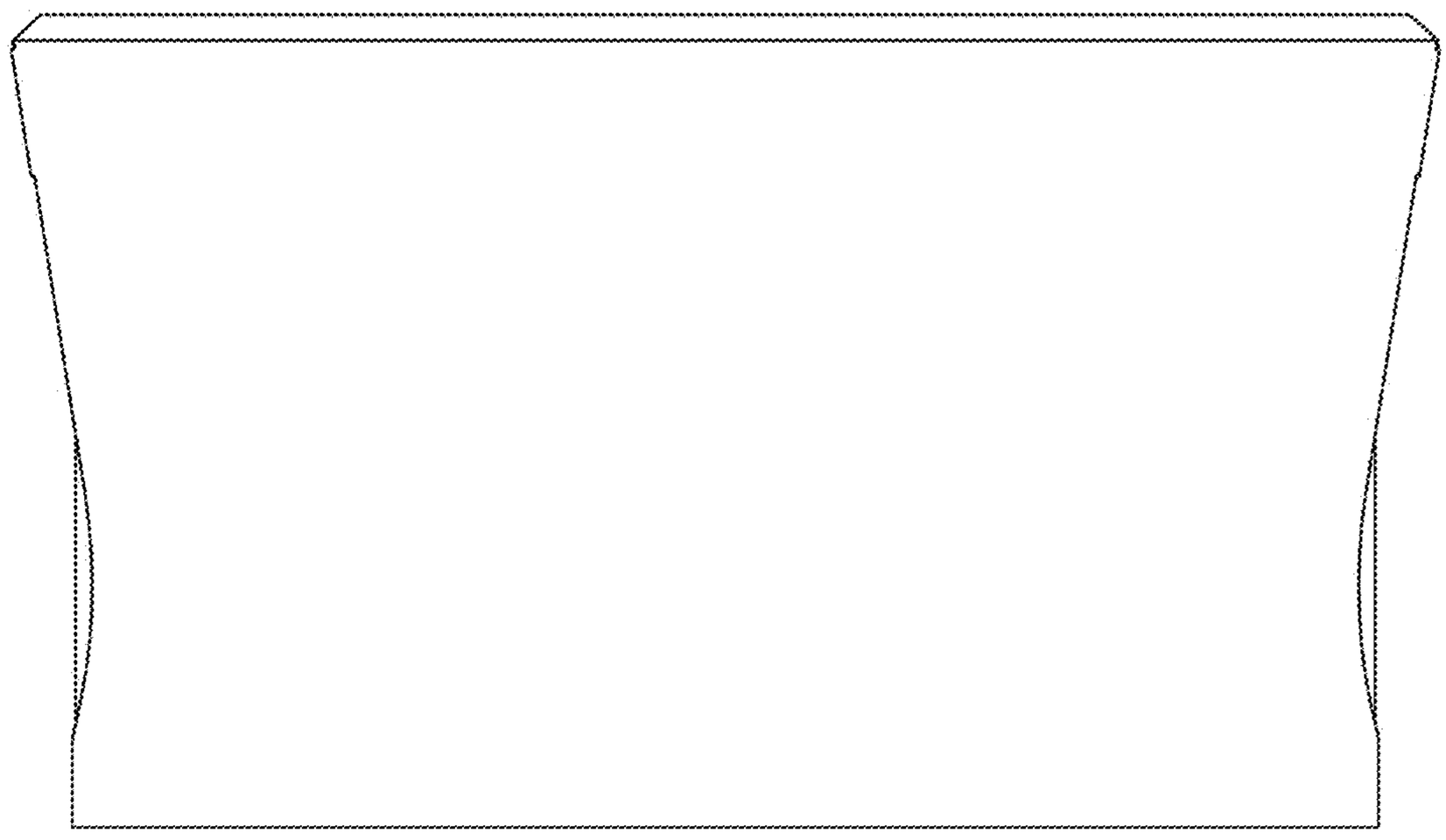

FIG. 16

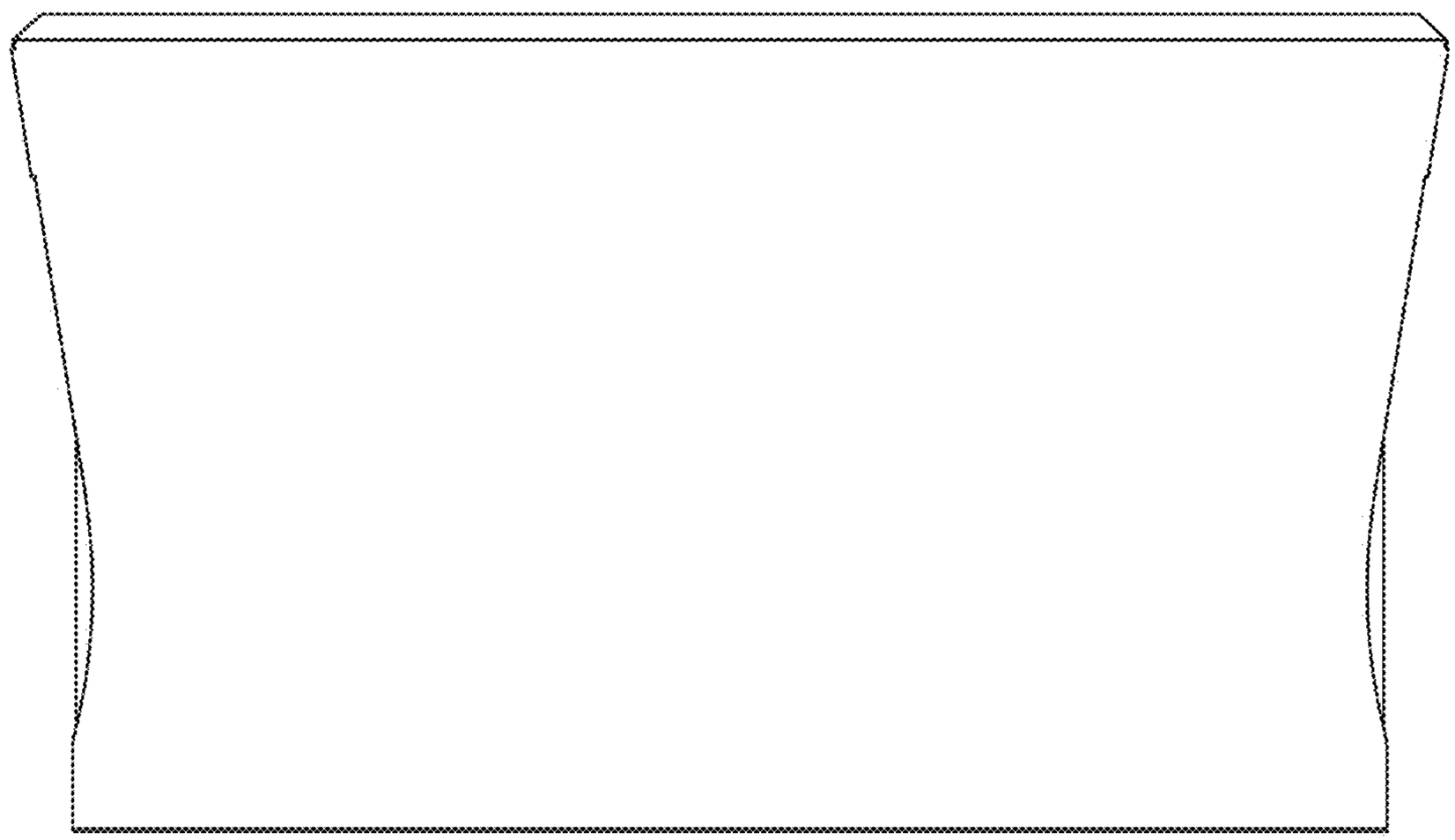

FIG. 17

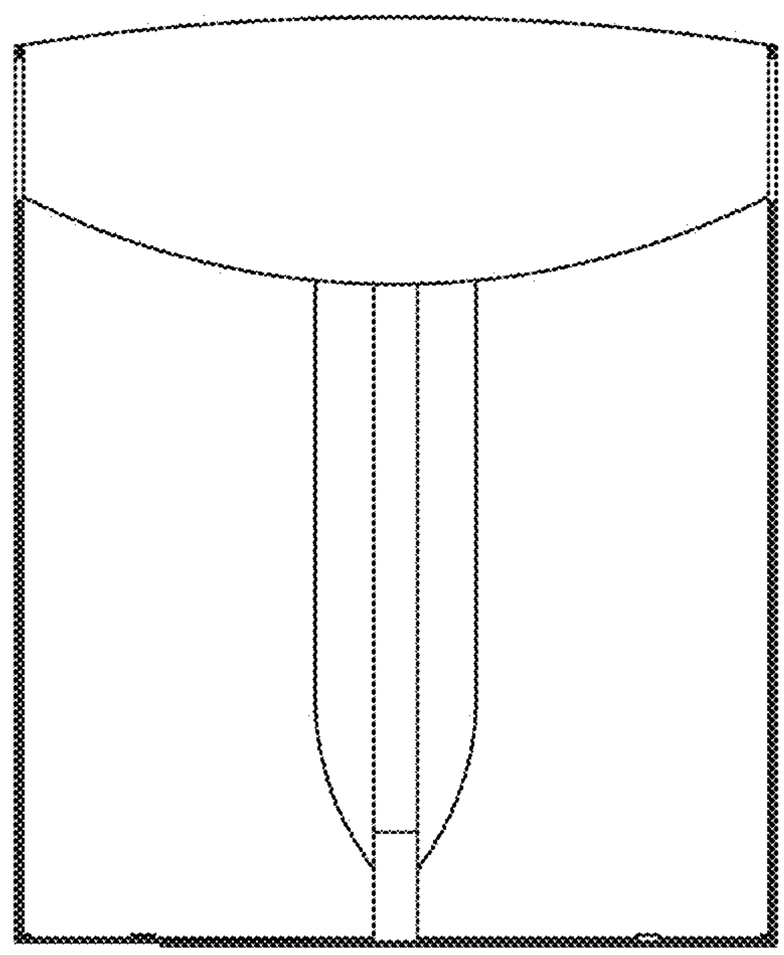

FIG. 18

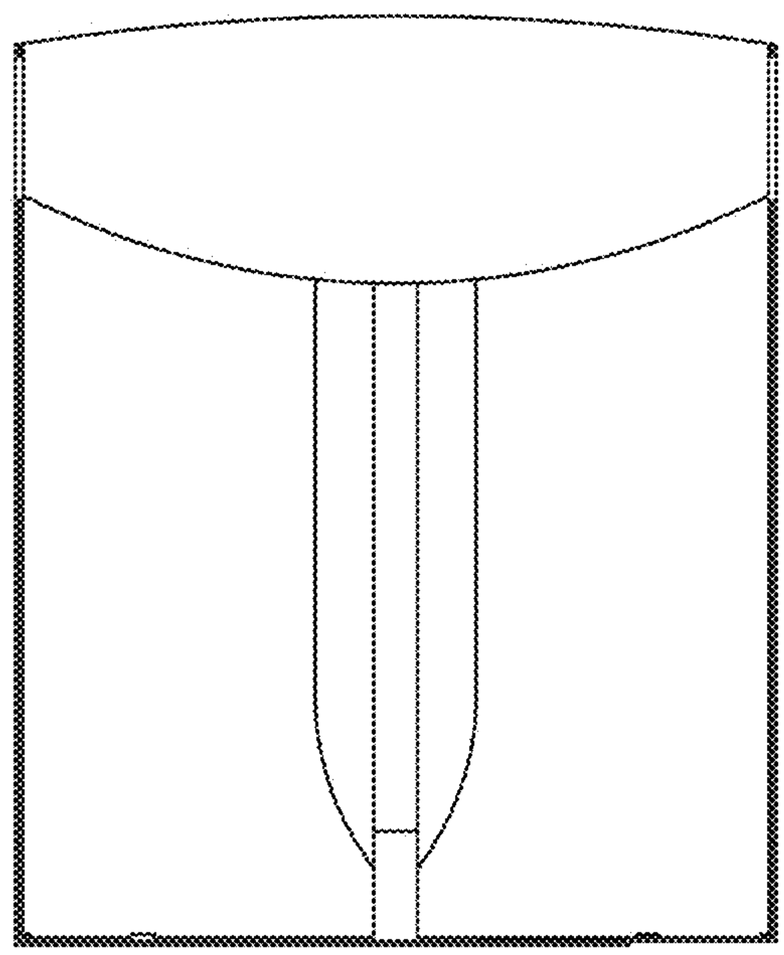

FIG. 19

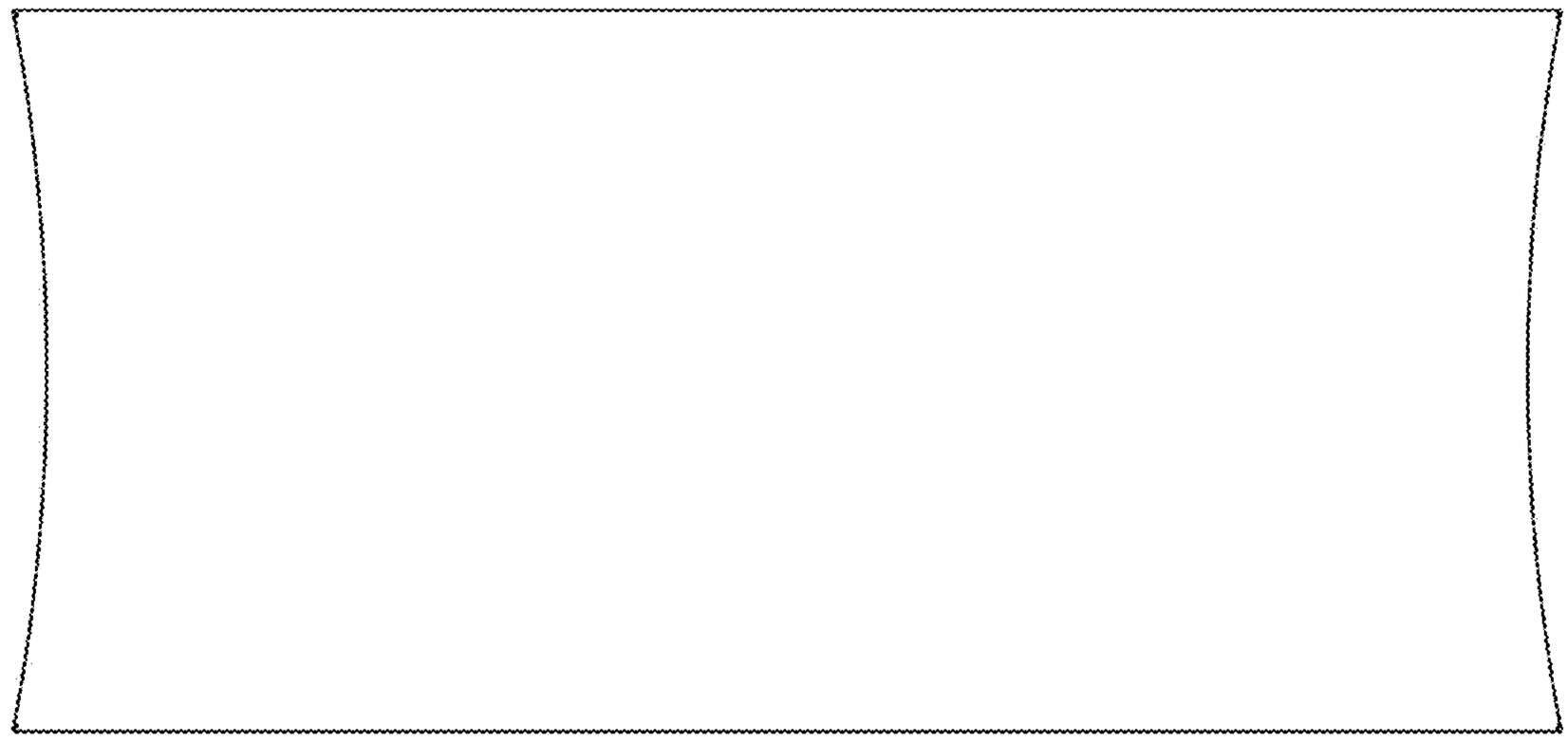

FIG. 20

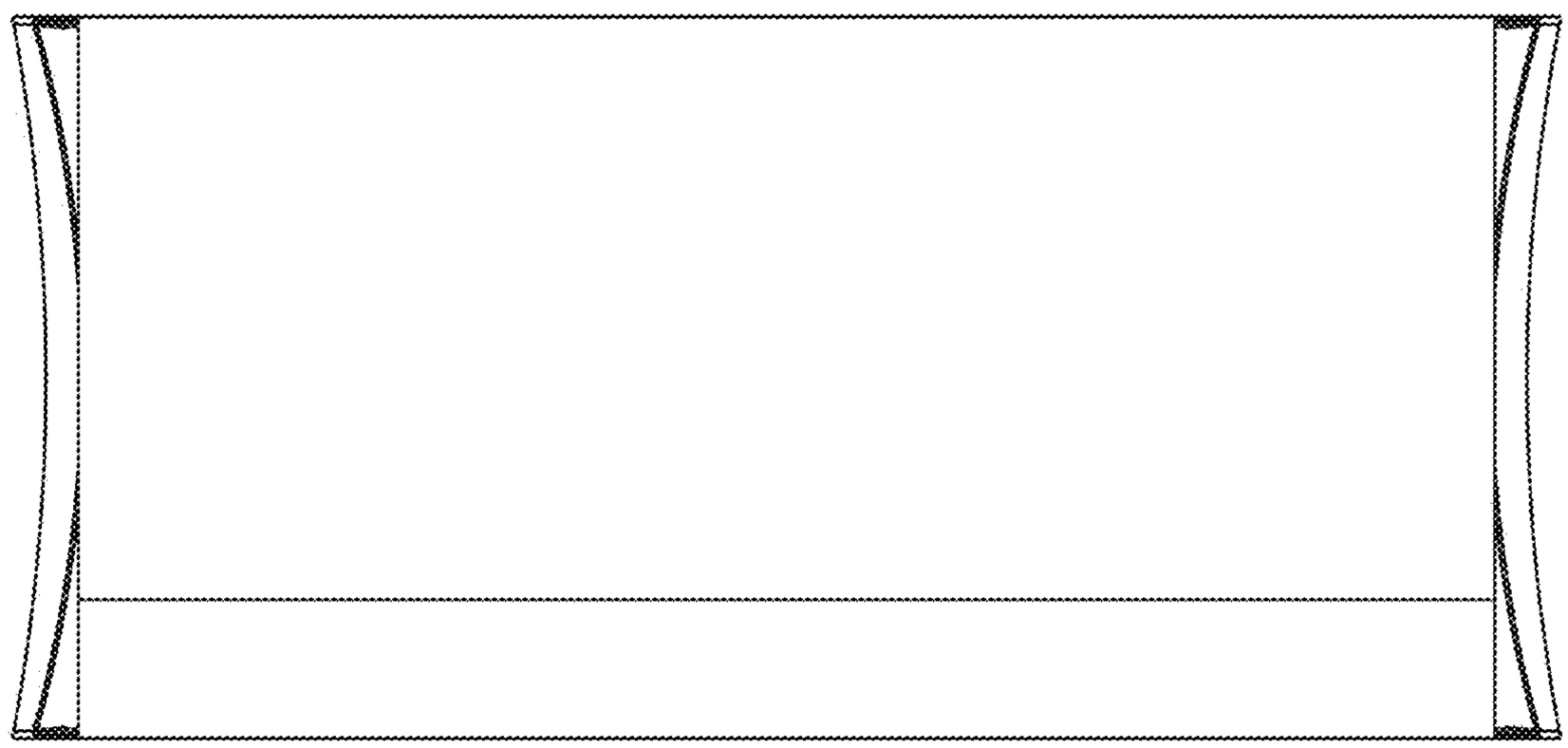

FIG. 21