US00D909505S

(12) United States Design Patent

Schweigert et al.

(10) Patent No.: US D909,505 S
(45) Date of Patent: ** Feb. 2, 2021

(54) **GOLF CLUB HEAD**

(71) Applicant: **PARSONS XTREME GOLF, LLC**, Scottsdale, AZ (US)

(72) Inventors: **Bradley D. Schweigert**, Cave Creek, AZ (US); **Michael R. Nicolette**, Scottsdale, AZ (US)

(73) Assignee: **PARSONS XTREME GOLF, LLC**, Scottsdale, AZ (US)

(**) Term: **15 Years**

(21) Appl. No.: **29/696,809**

(22) Filed: **Jul. 1, 2019**

Related U.S. Application Data

(63) Continuation-in-part of application No. 29/687,944, filed on Apr. 17, 2019, now abandoned.

(51) **LOC (13) Cl.** **21-02**

(52) **U.S. Cl.**
USPC **D21/736**

(58) **Field of Classification Search**
USPC D21/736–746, 759
CPC A63B 53/00; A63B 53/04; A63B 53/007; A63B 53/065; A63B 53/0487; A63B 60/00; A63B 60/46
See application file for complete search history.

(56) **References Cited**

U.S. PATENT DOCUMENTS

RE19,178	E	5/1934	Spiker
4,043,562	A	8/1977	Shillington
D248,783	S	8/1978	Long
D281,092	S	10/1985	Mills
4,754,977	A	7/1988	Sahm
4,869,507	A	9/1989	Sahm
D313,451	S	1/1991	Shearer
D335,317	S	5/1993	Shearer
D335,692	S	5/1993	Antonious
D336,757	S	6/1993	Antonious
D350,582	S	9/1994	Miansian et al.
5,390,919	A	2/1995	Stubbs
5,429,366	A	7/1995	McCabe
D363,101	S	10/1995	Sturm
5,489,097	A	2/1996	Simmons
D368,751	S	4/1996	Rife
D369,393	S	4/1996	Yutaka
D365,864	S	10/1996	Strum
5,571,053	A	11/1996	Lane
D378,688	S	4/1997	Cameron, Jr.
D380,514	S	7/1997	Markley
D385,609	S	10/1997	Cameron
5,683,307	A	11/1997	Rife
D388,143	S	12/1997	Huan-Chiang
D389,207	S	1/1998	Cameron
D398,685	S	9/1998	Masuda
D399,290	S	10/1998	Sizemore, Jr.
D399,911	S	10/1998	Sanchez
5,839,974	A	11/1998	McAllister
D405,836	S	2/1999	Nicolette et al.
D409,701	S	5/1999	Ashcraft et al.
5,924,938	A	7/1999	Hines
D422,655	S	4/2000	Hicks
D426,276	S	6/2000	Besnard et al.
D431,854	S	10/2000	Cameron
D432,192	S	10/2000	Hicks
D436,151	S	1/2001	Nicolette et al.
D437,374	S	2/2001	Cameron
D441,820	S	5/2001	Nicolette et al.
D443,668	S	6/2001	Nicolette et al.
D443,905	S	6/2001	Nicolette et al.
D444,833	S	7/2001	Nicolette
6,264,571	B1	7/2001	Lekavich
D449,664	S	10/2001	Beebe et al.
D449,865	S	10/2001	Fife, Jr. et al.
D450,799	S	11/2001	Nicolette et al.
D451,973	S	12/2001	Wells et al.
6,348,014	B1	2/2002	Chiu
6,354,959	B1	3/2002	Nicolette
6,394,910	B1	5/2002	McCarthy
D472,949	S	4/2003	Serrano
D474,821	S	5/2003	Wells et al.
D483,086	S	12/2003	Schweigert
D486,872	S	2/2004	Schweigert et al.
D498,276	S	11/2004	Schweigert et al.
6,902,496	B2	6/2005	Solheim
D511,801	S	11/2005	Garcia
D512,114	S	11/2005	Garcia
D512,116	S	11/2005	Miraflor et al.
6,988,956	B2	1/2006	Cover
D520,088	S	5/2006	Parr
D531,242	S	10/2006	Adams
D532,067	S	11/2006	Soracco
7,153,220	B2	12/2006	Lo

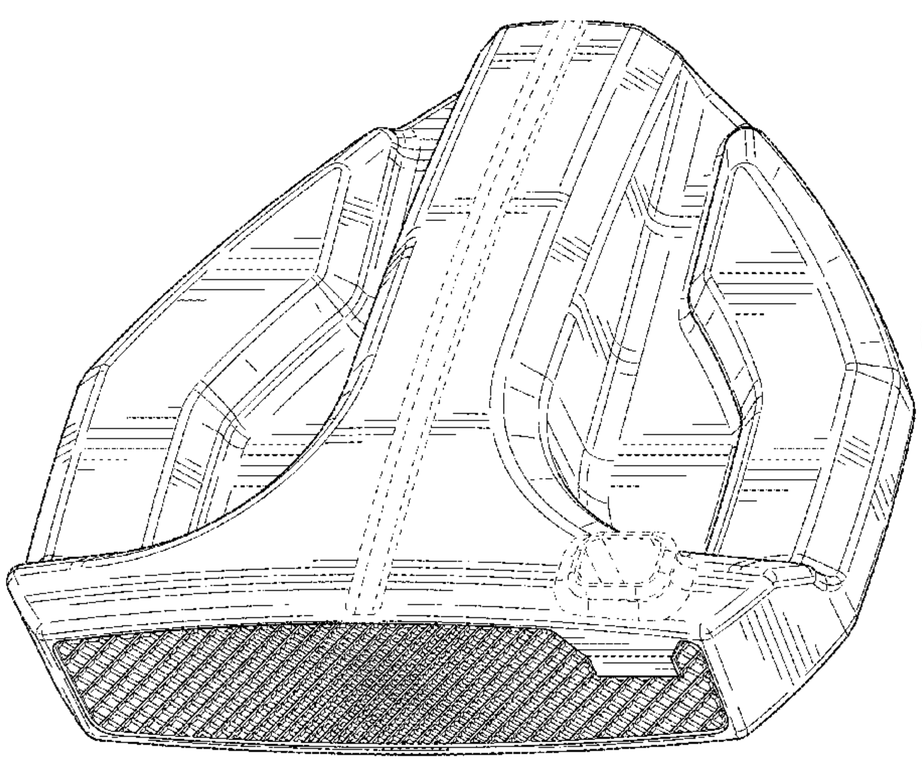

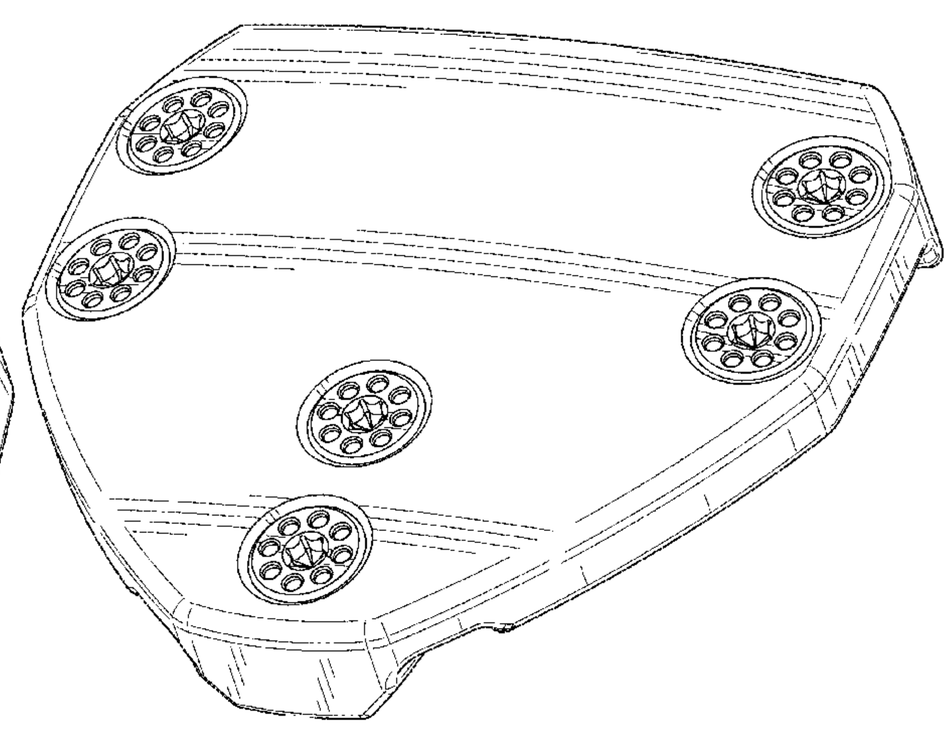

D534,595	S		1/2007	Hasebe	
7,156,752	B1		1/2007	Bennett	
D536,401	S		2/2007	Kawami	
D536,403	S		2/2007	Kawami	
D538,371	S		3/2007	Kawami	
7,204,765	B2		4/2007	Cover	
D542,869	S		5/2007	Adams	
D543,598	S		5/2007	Kuan et al.	
D543,601	S		5/2007	Kawami	
D555,219	S		11/2007	Lin	
D556,277	S		11/2007	Broom	
D561,854	S	*	2/2008	Morris	D21/744
7,331,876	B2		2/2008	Klein	
7,351,162	B2		4/2008	Soracco	
D569,930	S		5/2008	Nehrbas	
7,396,289	B2		7/2008	Soracco	
D577,086	S		8/2008	Nicolette et al.	
D577,085	S		9/2008	Nicolette et al.	
D579,506	S		10/2008	Nicolette et al.	
D579,995	S		11/2008	Nicolette et al.	
D582,497	S		12/2008	Rollinson	
7,473,189	B2		1/2009	Schweigert	
7,491,131	B2		2/2009	Vinton	
D595,793	S	*	7/2009	Rollinson	D21/736
D596,461	S		7/2009	Mansfield	
D599,425	S		9/2009	Laub	
D599,867	S		9/2009	Teramoto	
D600,763	S		9/2009	Cameron	
D601,214	S		9/2009	Serrano	
D607,951	S		1/2010	Teramoto	
7,744,485	B2		6/2010	Jones	
D620,993	S		8/2010	Laub	
D623,709	S		9/2010	Serrano et al.	
D631,925	S		2/2011	Broom	
7,887,432	B2		2/2011	Jones	
D633,964	S		3/2011	Teramoto	
7,909,707	B2		3/2011	Klein	
7,918,745	B2		4/2011	Morris	
7,927,226	B1		4/2011	Twitty	
D638,891	S		5/2011	Nicolette et al.	
D642,643	S		8/2011	Nicolette et al.	
D643,485	S		8/2011	Nicolette et al.	
D645,104	S		9/2011	Nicolette et al.	
8,096,039	B2		1/2012	Soracco	
D653,718	S	*	2/2012	Stokke	D21/743
D655,361	S		3/2012	Ramsauer	
D661,753	S		6/2012	Cameron et al.	
D666,260	S		8/2012	Cynn	
8,376,878	B2		2/2013	Bennett	
D688,339	S		8/2013	Hilton et al.	
D688,341	S		8/2013	Rollinson	
D691,226	S		10/2013	Hilton et al.	
D699,308	S		2/2014	Rollinson	
D704,782	S		5/2014	Rollinson	
8,721,472	B2		5/2014	Kuan	
8,790,193	B2		7/2014	Serrano	
D711,483	S		8/2014	Wong	
D715,388	S	*	10/2014	Serrano	D21/743
D722,350	S		2/2015	Schweigert	
D722,351	S		2/2015	Parsons et al.	
D722,352	S		2/2015	Nicolette et al.	
D723,120	S		2/2015	Nicolette	
D724,164	S		3/2015	Schweigert et al.	
D725,208	S		3/2015	Schweigert	
D726,265	S		4/2015	Nicolette	
D726,846	S		4/2015	Schweigert	
D726,849	S		4/2015	Burns	
D733,234	S		6/2015	Nicolette	
D735,283	S		7/2015	Solheim	
D738,447	S		9/2015	Schweigert	
D738,449	S		9/2015	Schweigert	
D739,487	S		9/2015	Schweigert	
D741,426	S		10/2015	Schweigert	
D746,926	S		1/2016	Parsons	
D748,213	S		1/2016	Parsons et al.	
D748,215	S		1/2016	Parsons et al.	
9,233,283	B2		1/2016	Schweigert	
D750,186	S	*	2/2016	Schweigert	D21/746
D752,697	S		3/2016	Claveran	
D753,252	S		4/2016	Schweigert	
D783,101	S	*	4/2017	Schweigert	D21/736
D791,891	S		7/2017	Davis	
D794,146	S		8/2017	Davis	
D801,458	S	*	10/2017	Rollinson	D21/742
D812,163	S		3/2018	Kroloff	
D827,064	S	*	8/2018	Wypych	D21/743
D831,766	S	*	10/2018	Schweigert	D21/743
D842,952	S	*	3/2019	Schweigert	D21/743
D848,562	S	*	5/2019	Nicolette	D21/736
D860,350	S	*	9/2019	Rollinson	D21/742
D864,325	S	*	10/2019	Rollinson	D21/743
10,493,331	B2	*	12/2019	Kroloff	A63B 53/0433
10,561,911	B2	*	2/2020	Parsons	A63B 53/0487
10,576,339	B2	*	3/2020	Schweigert	A63B 60/02
D892,956	S	*	8/2020	Clarke	D21/744
10,737,153	B2	*	8/2020	Schweigert	A63B 53/0487
D898,848	S	*	10/2020	Clarke	D21/743
2007/0142122	A1		6/2007	Bonneau	
2007/0207875	A1		9/2007	Kuan	
2007/0238548	A1		10/2007	Johnson	
2008/0139333	A1		6/2008	Klein	
2008/0146372	A1		6/2008	John	
2008/0176672	A1		7/2008	Roach	
2011/0165959	A1		7/2011	Klein	
2013/0165256	A1		6/2013	Stevenson	
2013/0210537	A1		8/2013	Ainscough	
2018/0001163	A1	*	1/2018	Becktor	A63B 53/0487
2018/0311545	A1	*	11/2018	Lambeth	B23P 15/00

FOREIGN PATENT DOCUMENTS

JP 20050160691 6/2005

OTHER PUBLICATIONS

U.S. Appl. No. 14/586,720, Parsons et al., "Golf Club Heads and Methods to Manufacture Golf Club Heads," filed Dec. 30, 2014.

U.S. Appl. No. 29/523,587, Schweigert, "Golf Club Head," filed April 10, 2015.

TourSpecGolf (Gold's Factory Multi Weighted Custom Putter) [online]. Nov. 20, 2010 [retrieved Apr. 21, 2016]. Retrieved from the Internet: <URL: http://www.tourspecgolf.com/blog/golds-factory-multi-weighted-custom-putter/>.

International Search Report and Written Opinion Issued in Connection With Corresponding Application No. PCT/US15/27841 dated Jul. 30, 2015 (14 Pages).

* cited by examiner

Primary Examiner — Mitchell I. Siegel

(57) **CLAIM**

The ornamental design for a golf club head, as shown and described.

DESCRIPTION

FIG. **1** is a top perspective view of a golf club head;
FIG. **2** is a bottom perspective view of the golf club head of FIG. **1**;
FIG. **3** is a front elevational view of the golf club head of FIG. **1**;
FIG. **4** is a rear elevational view of the golf club head of FIG. **1**;
FIG. **5** is a top view of the golf club head of FIG. **1**;
FIG. **6** is a bottom view of the golf club head of FIG. **1**;
FIG. **7** is a left side view of the golf club head of FIG. **1**;
FIG. **8** is a right side view of the golf club head of FIG. **1**;
FIG. **9** is a top perspective view of a second embodiment of the golf club head;

FIG. **10** is a bottom perspective view of the golf club head of FIG. **9**;
FIG. **11** is a front elevational view of the golf club head of FIG. **9**;
FIG. **12** is a rear elevational view of the golf club head of FIG. **9**;
FIG. **13** is a top view of the golf club head of FIG. **9**;
FIG. **14** is a bottom view of the golf club head of FIG. **9**;
FIG. **15** is a left side view of the golf club head of FIG. **9**;
FIG. **16** is a right side view of the golf club head of FIG. **9**;
FIG. **17** is a top perspective view of a third embodiment of the golf club head;
FIG. **18** is a bottom perspective view of the golf club head of FIG. **17**;
FIG. **19** is a front elevational view of the golf club head of FIG. **17**;
FIG. **20** is a rear elevational view of the golf club head of FIG. **17**;
FIG. **21** is a top view of the golf club head of FIG. **17**;
FIG. **22** is a bottom view of the golf club head of FIG. **17**;
FIG. **23** is a left side view of the golf club head of FIG. **17**; and,
FIG. **24** is a right side view of the golf club head of FIG. **17**.
The broken lines shown on the golf club head forms no part of the claimed design.

1 Claim, 18 Drawing Sheets

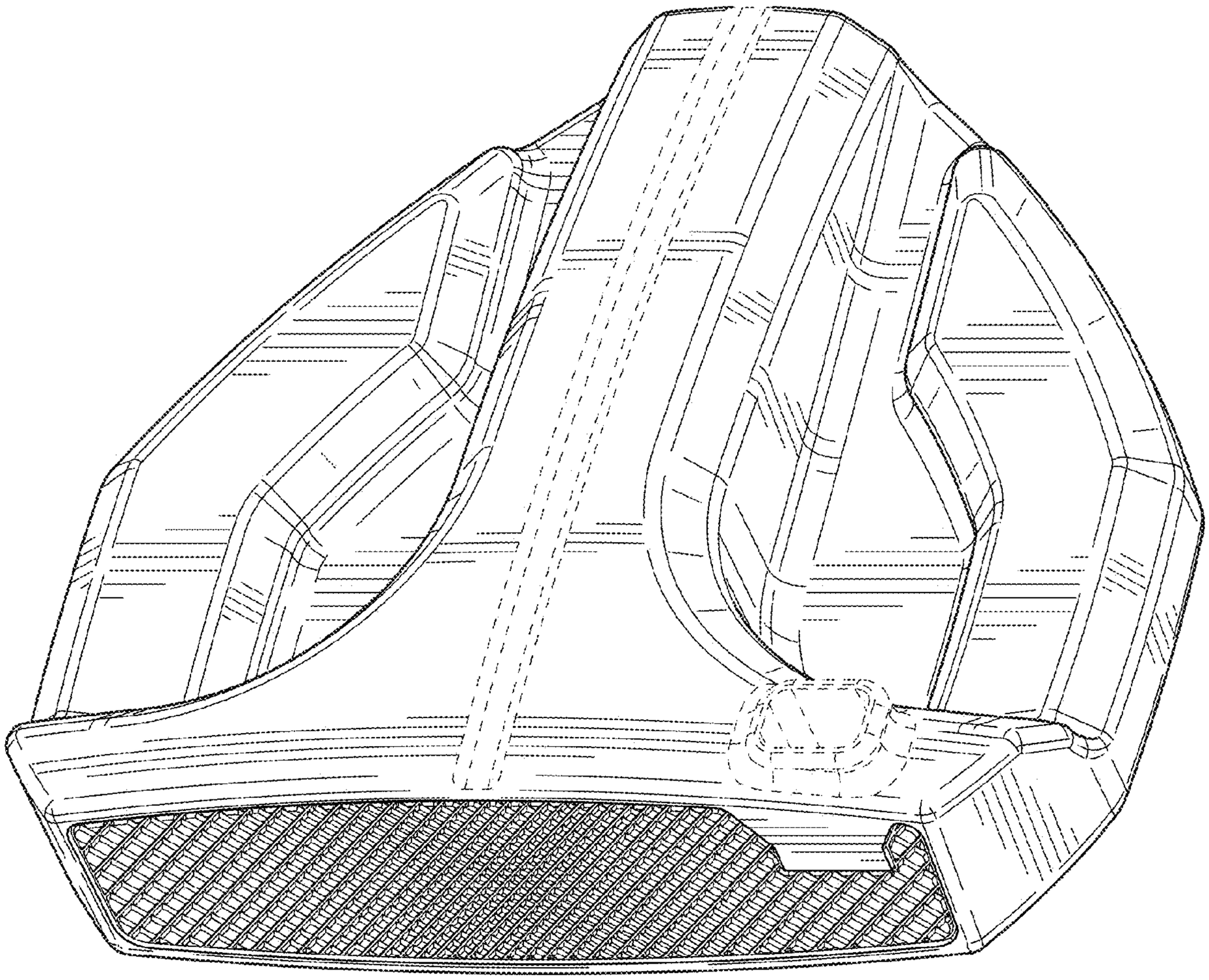

FIG. 1

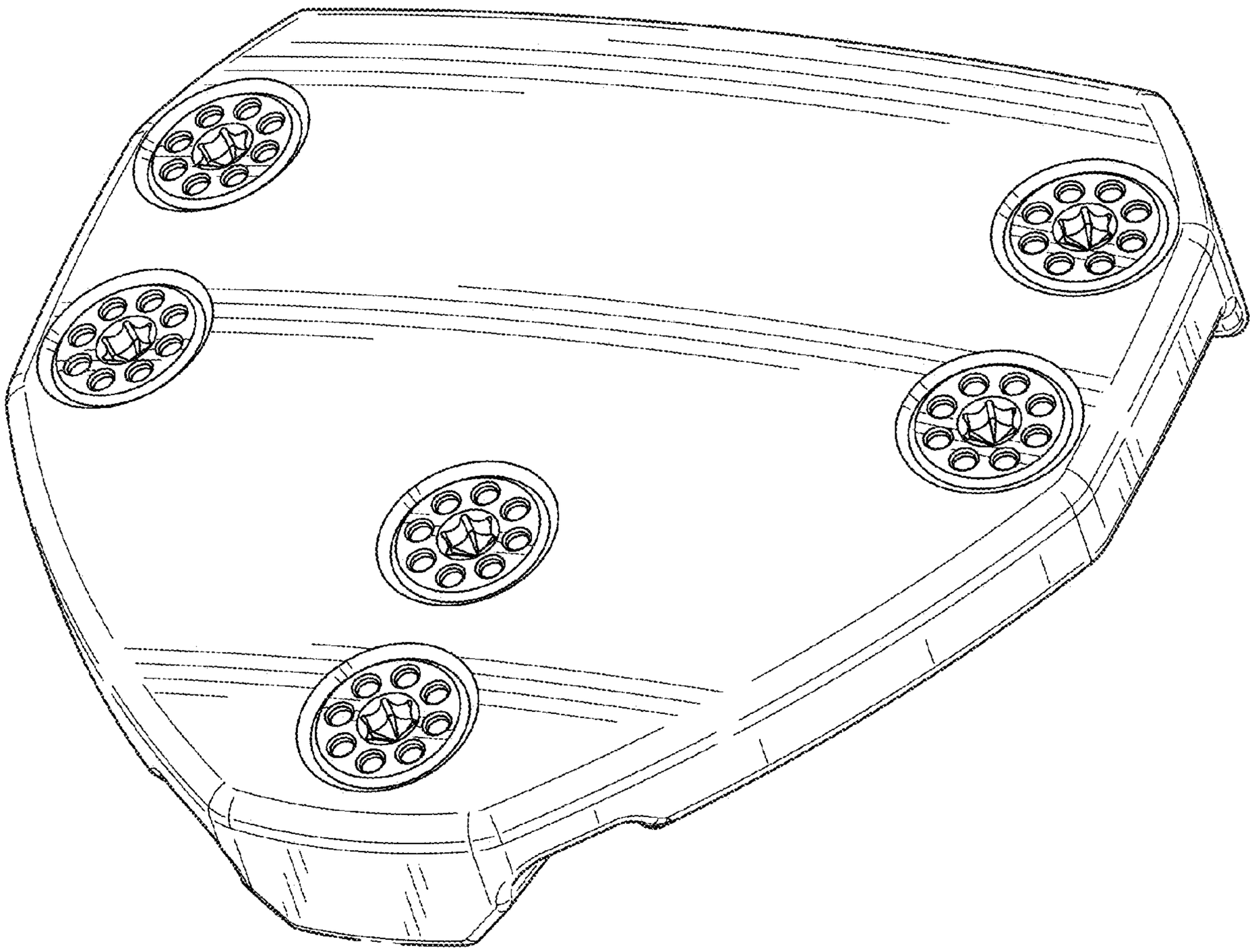

FIG. 2

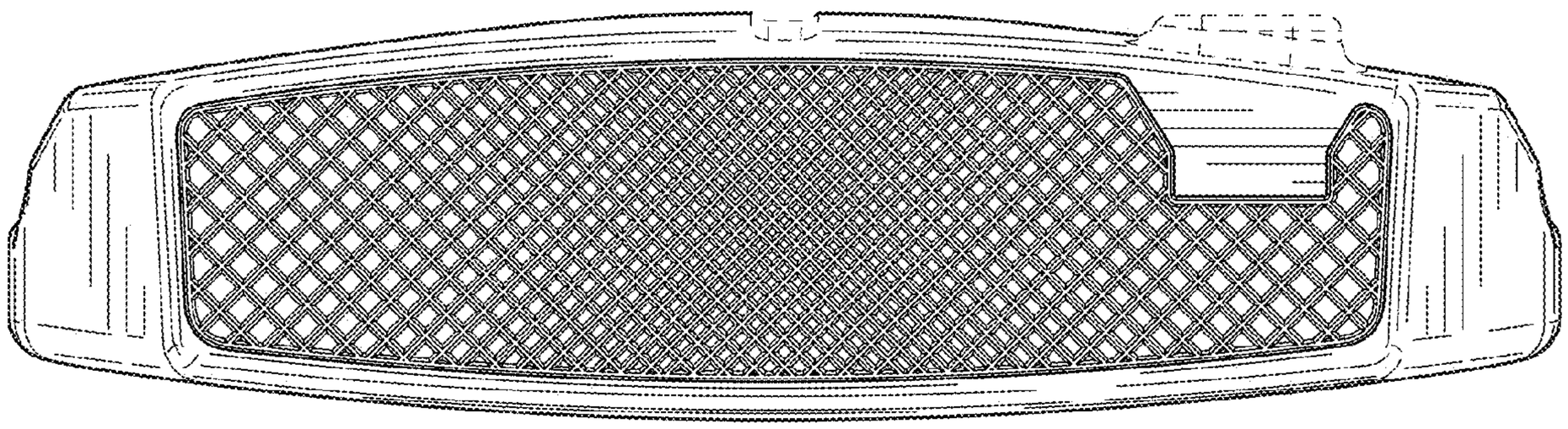

FIG. 3

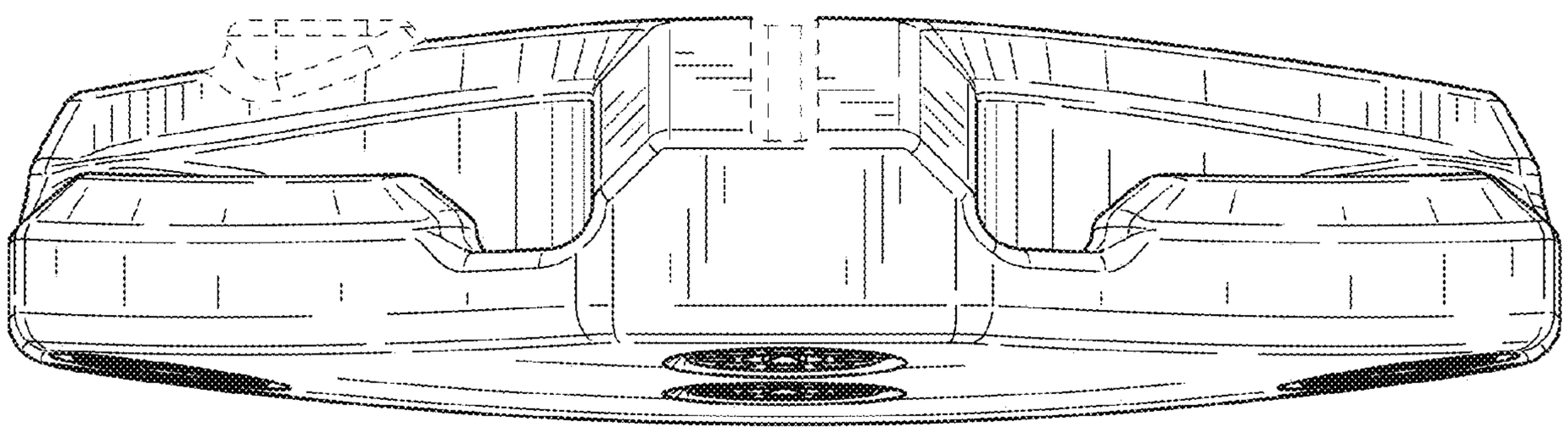

FIG. 4

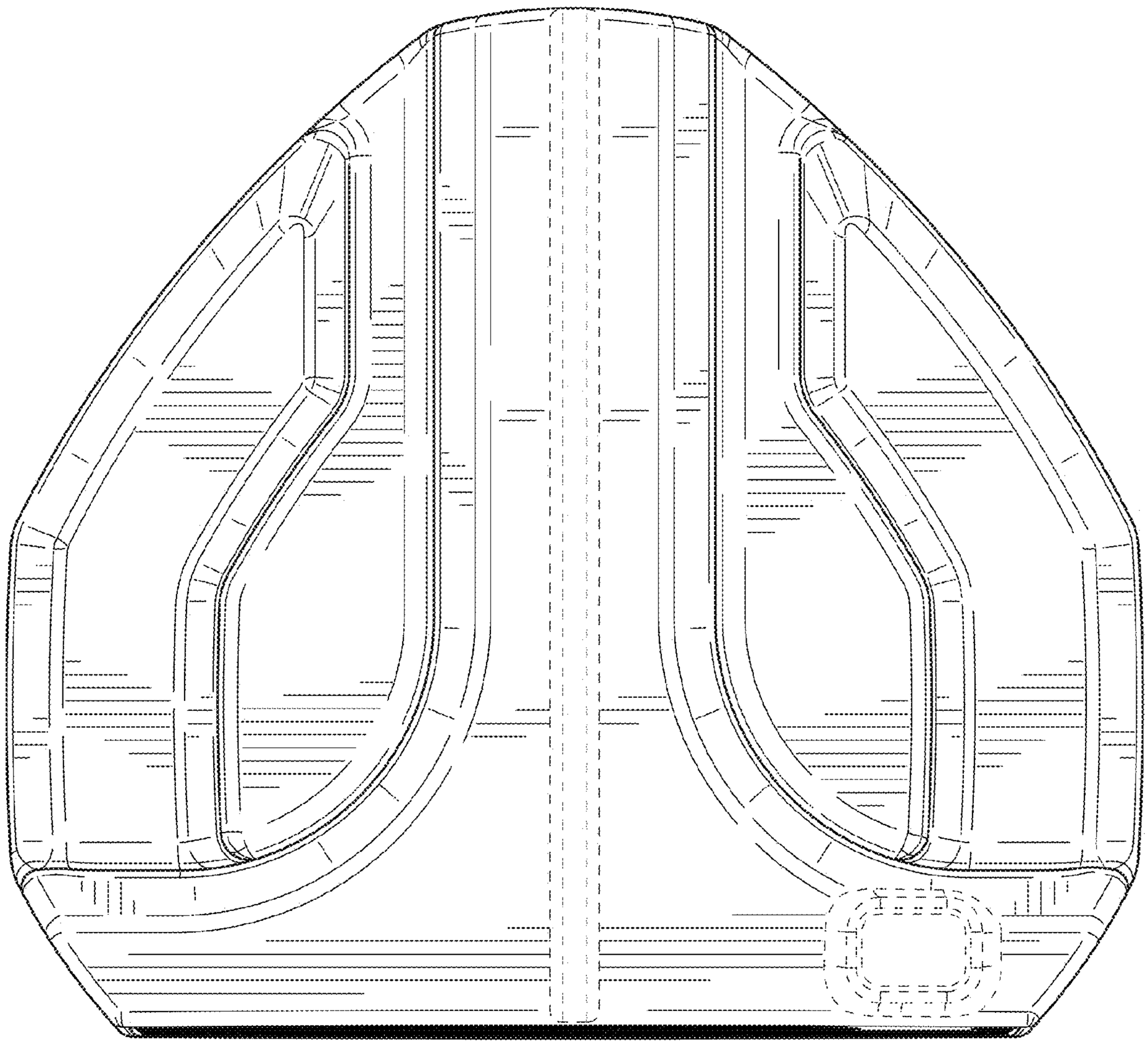

FIG. 5

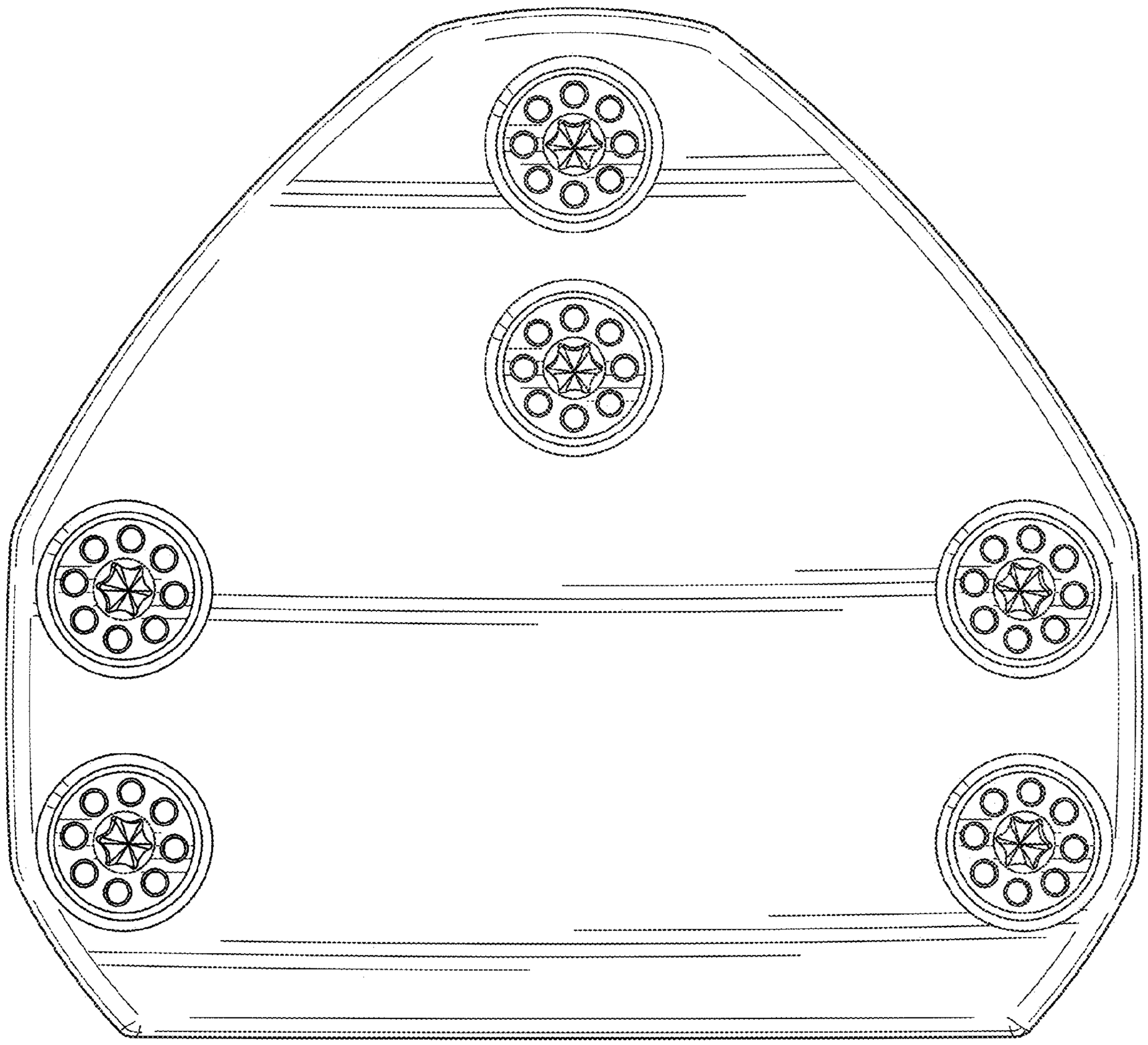

FIG. 6

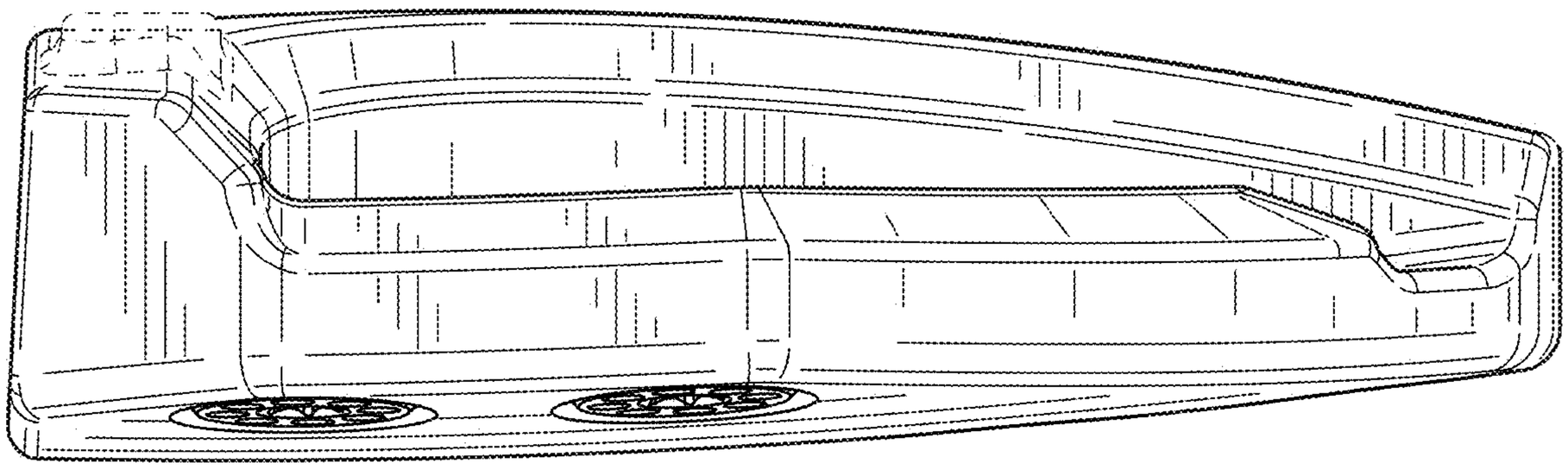

FIG. 7

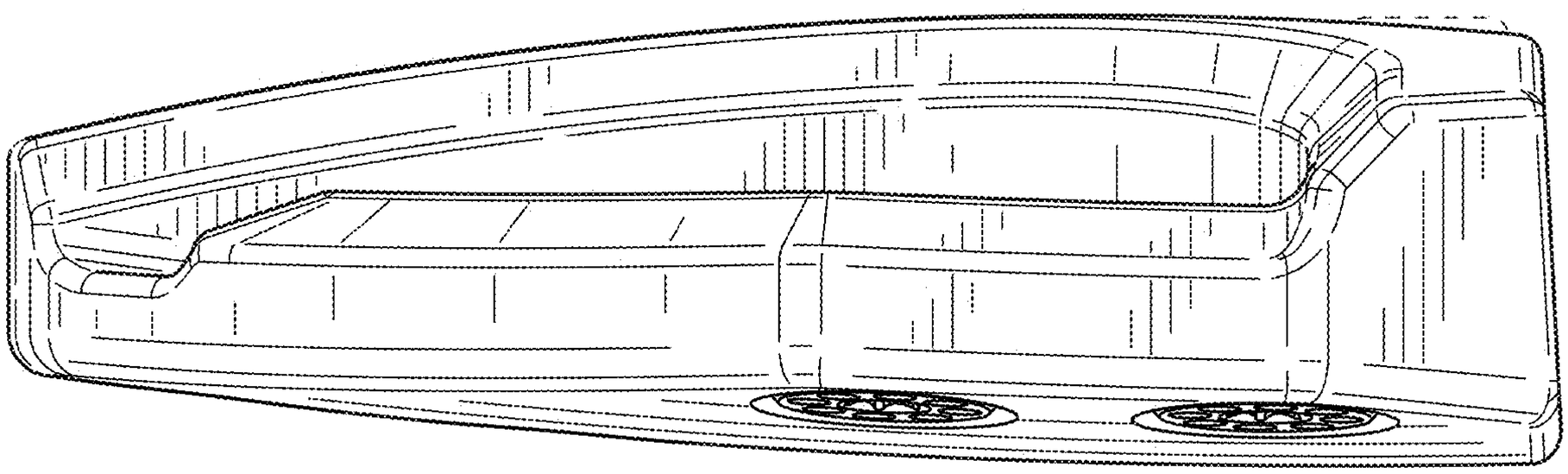

FIG. 8

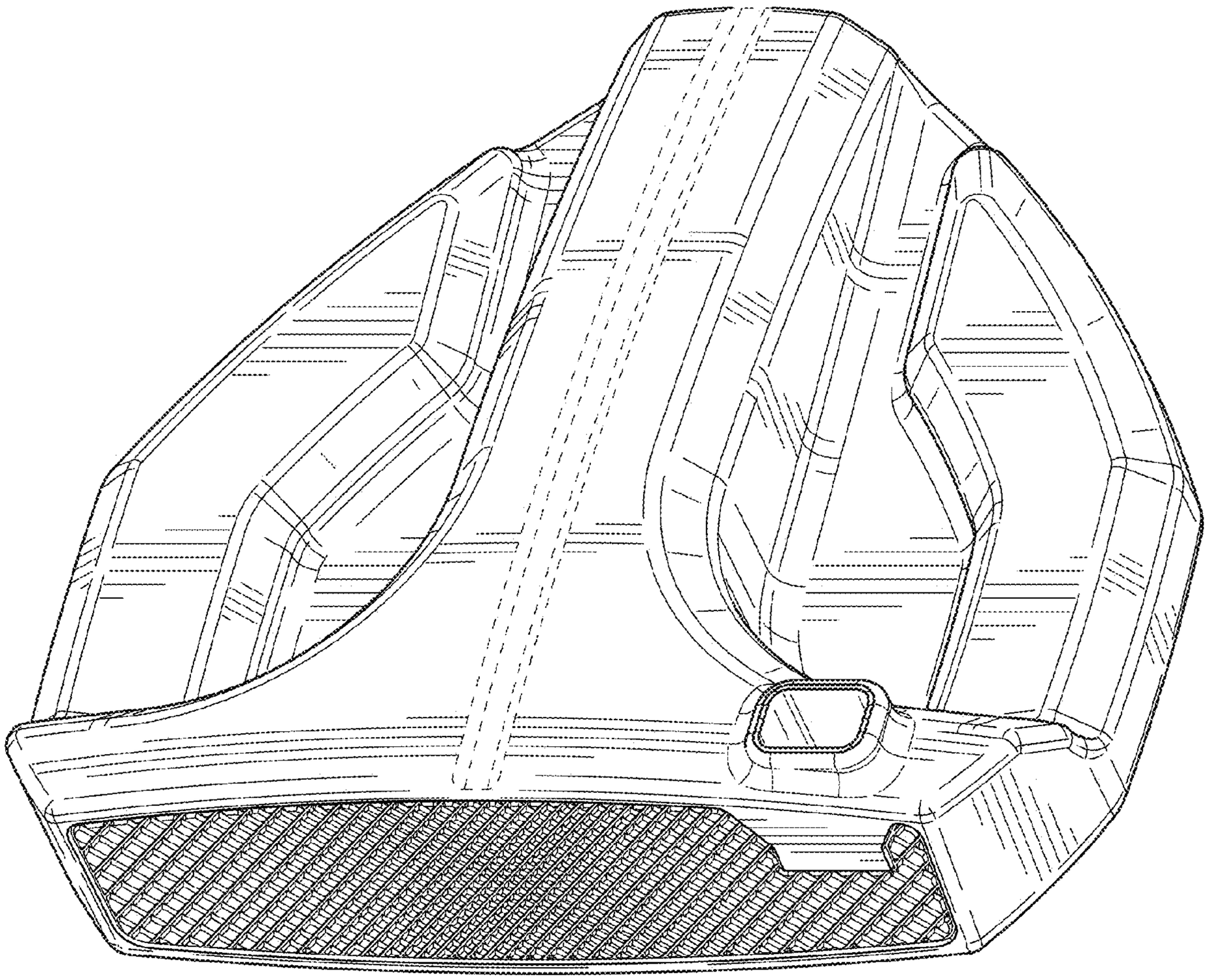

FIG. 9

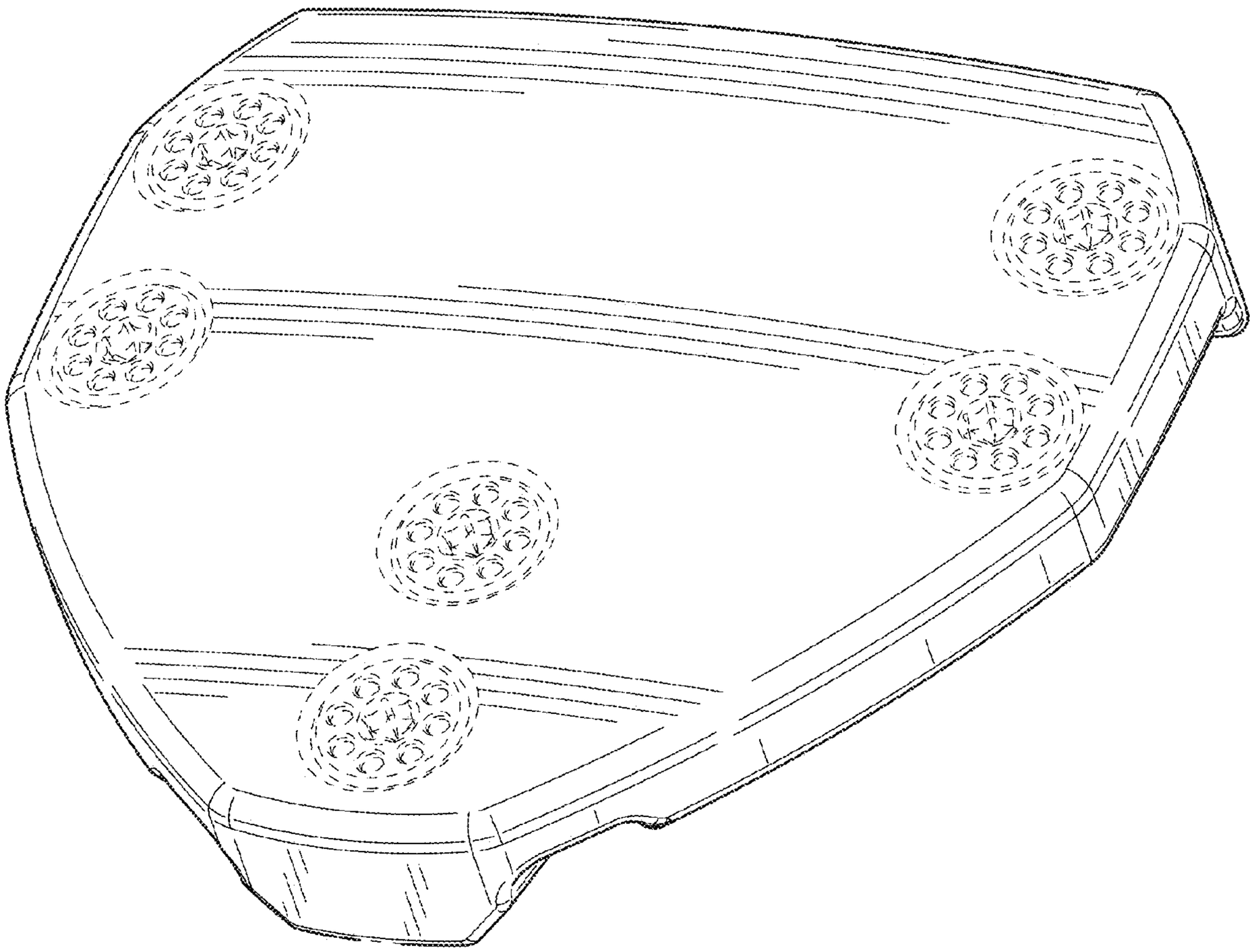

FIG. 10

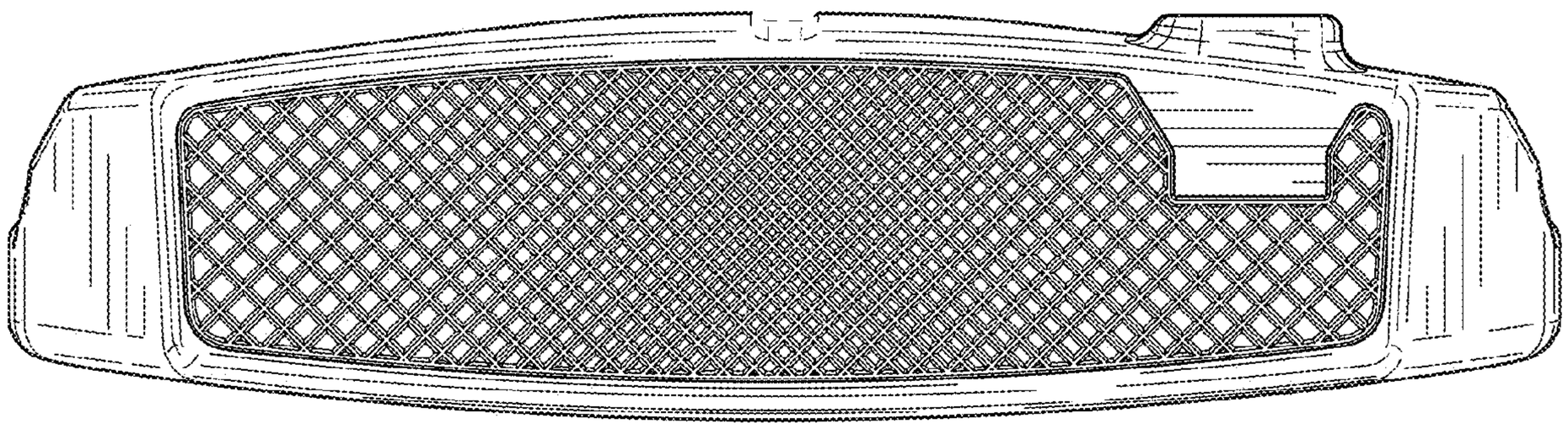

FIG. 11

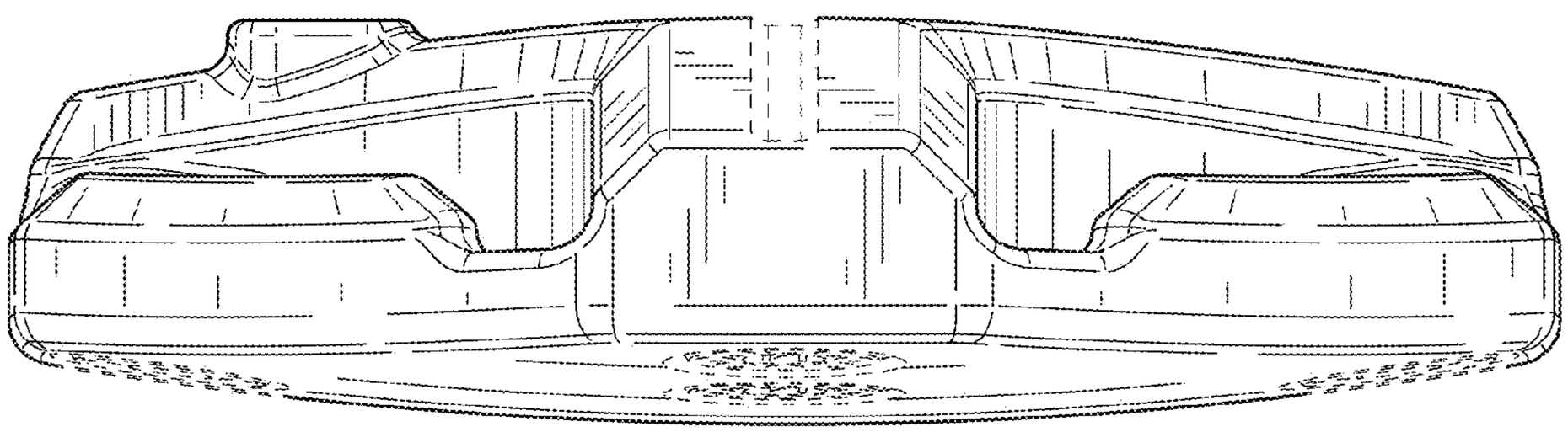

FIG. 12

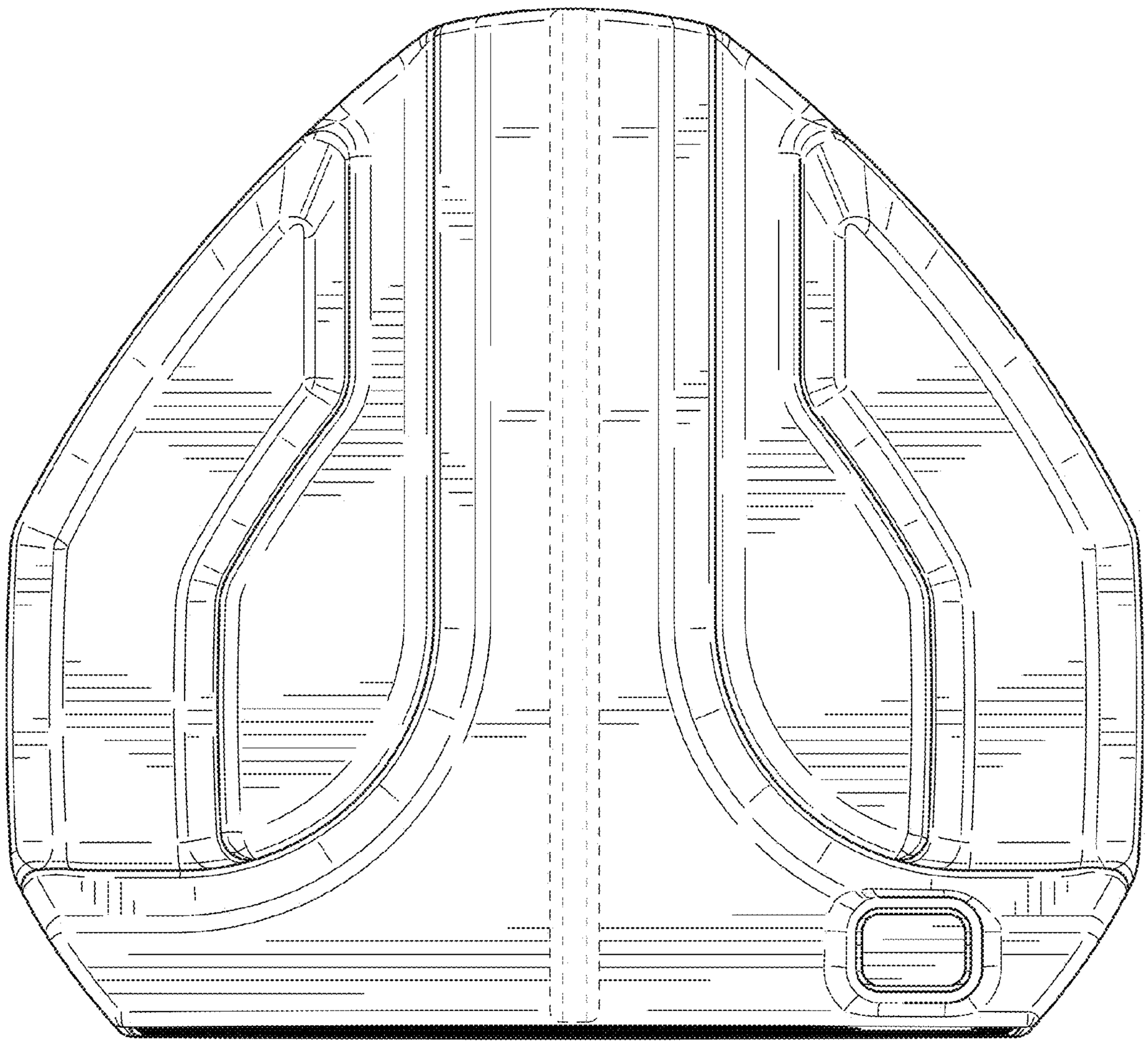

FIG. 13

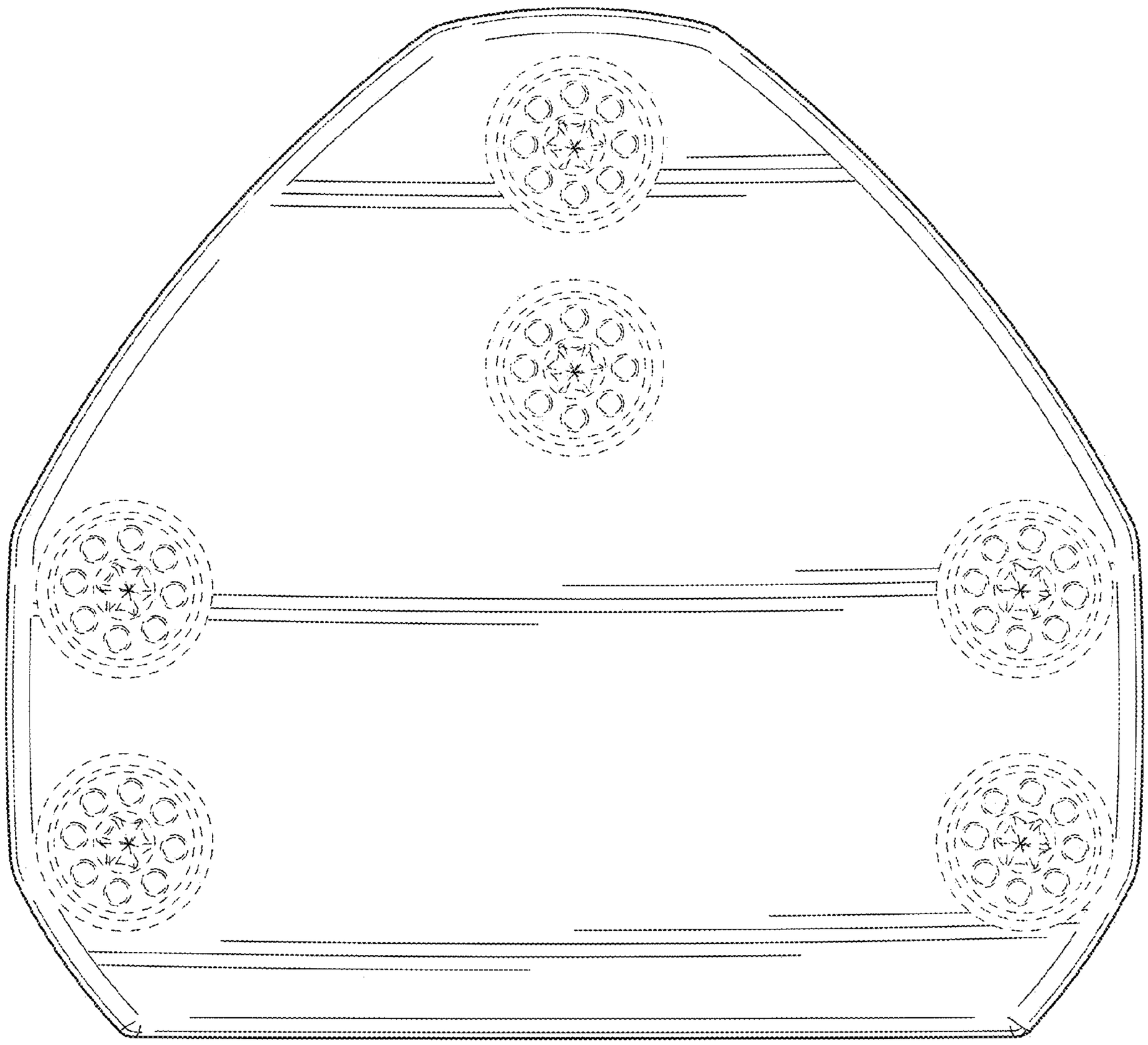

FIG. 14

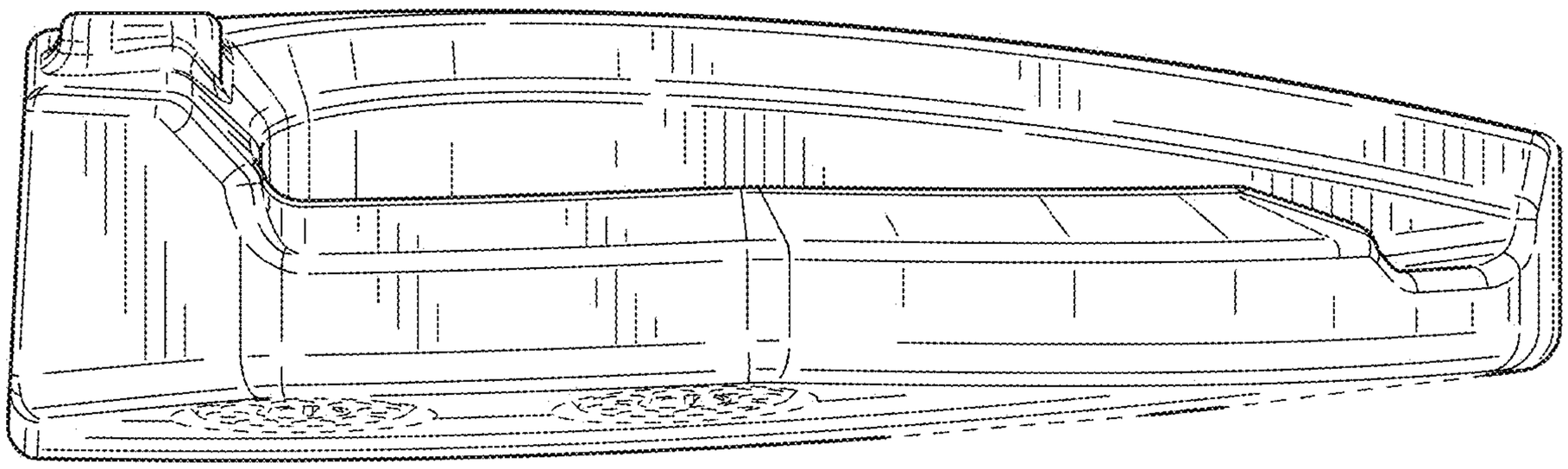

FIG. 15

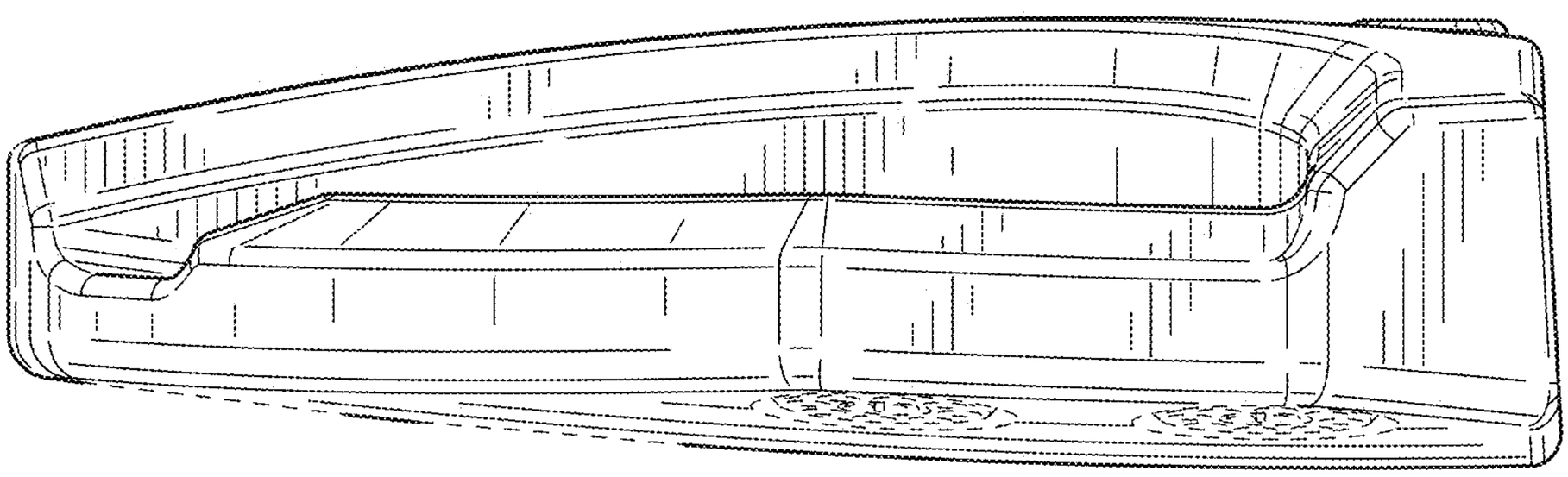

FIG. 16

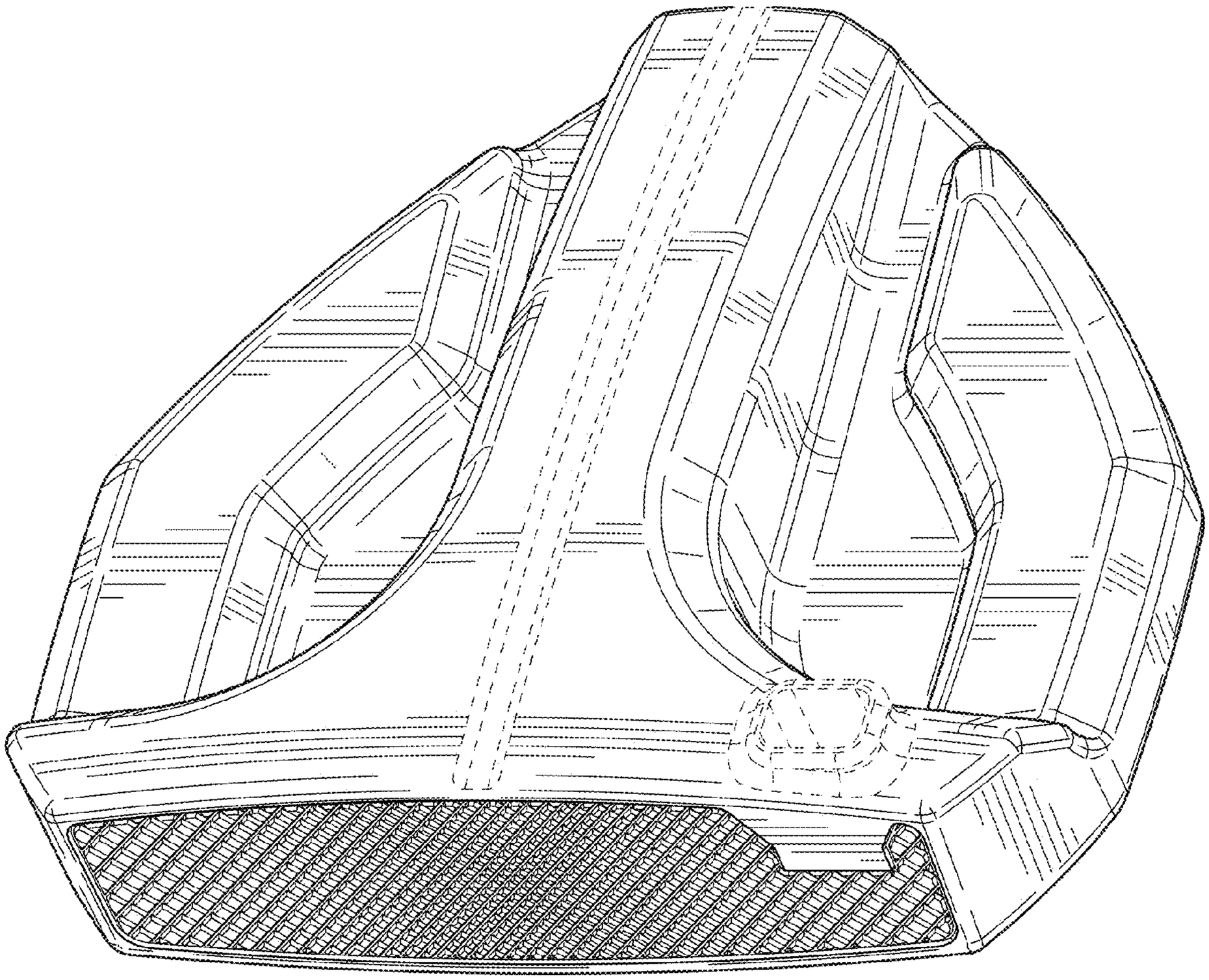

FIG. 17

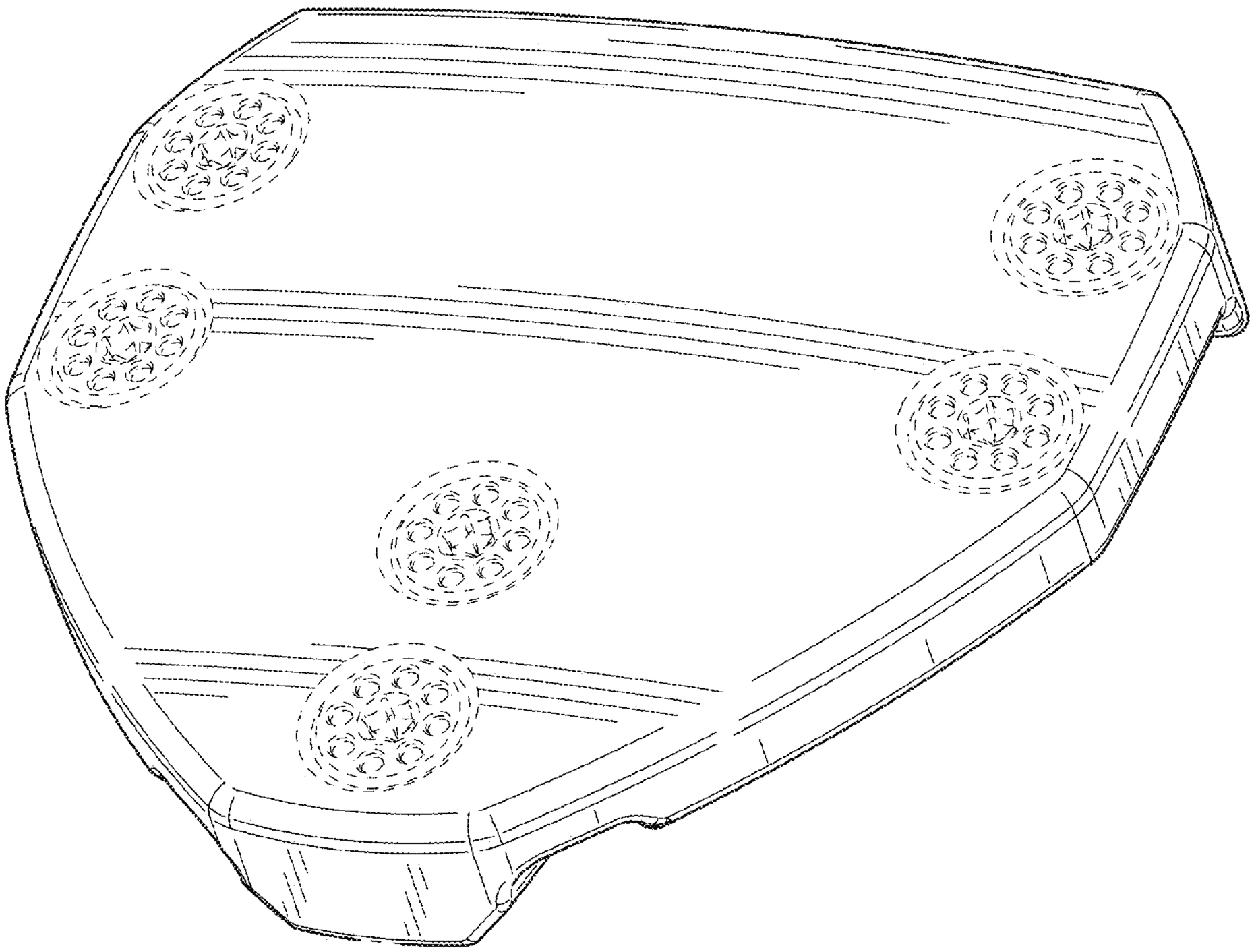

FIG. 18

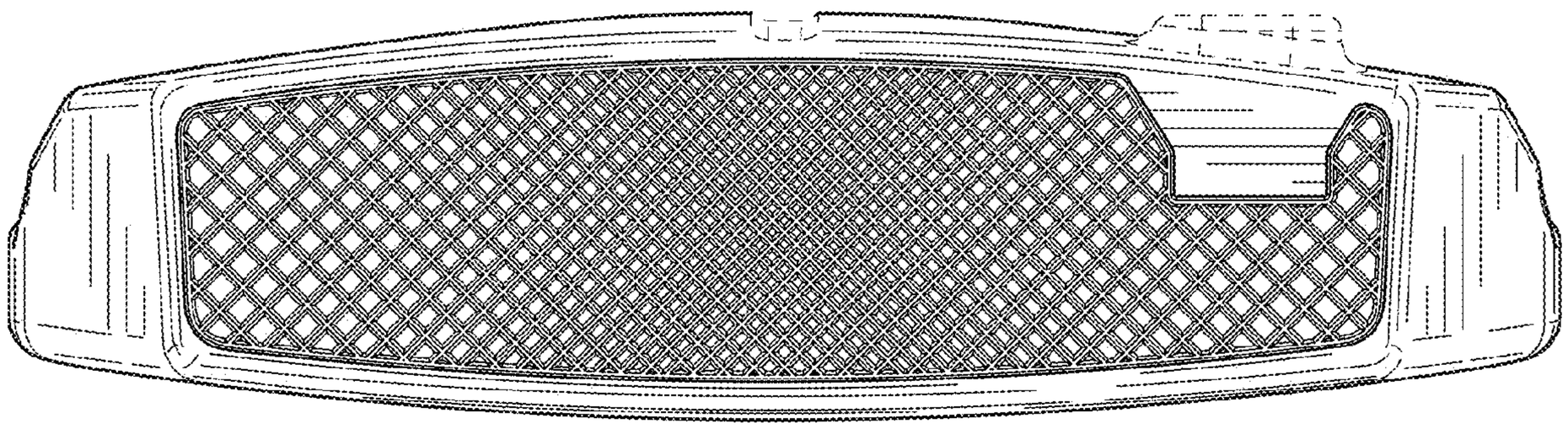

FIG. 19

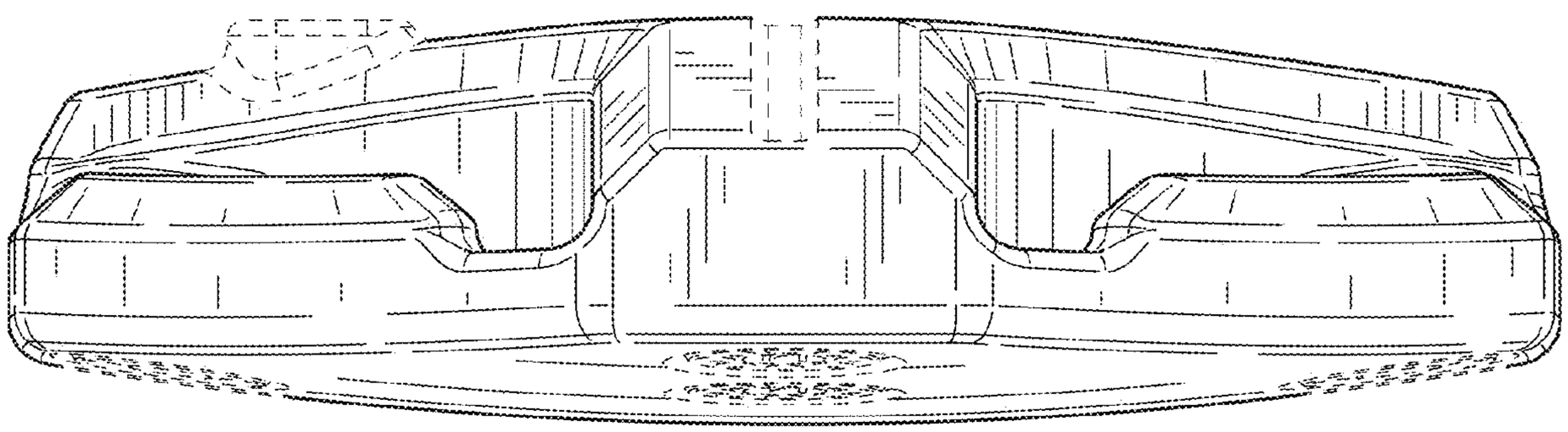

FIG. 20

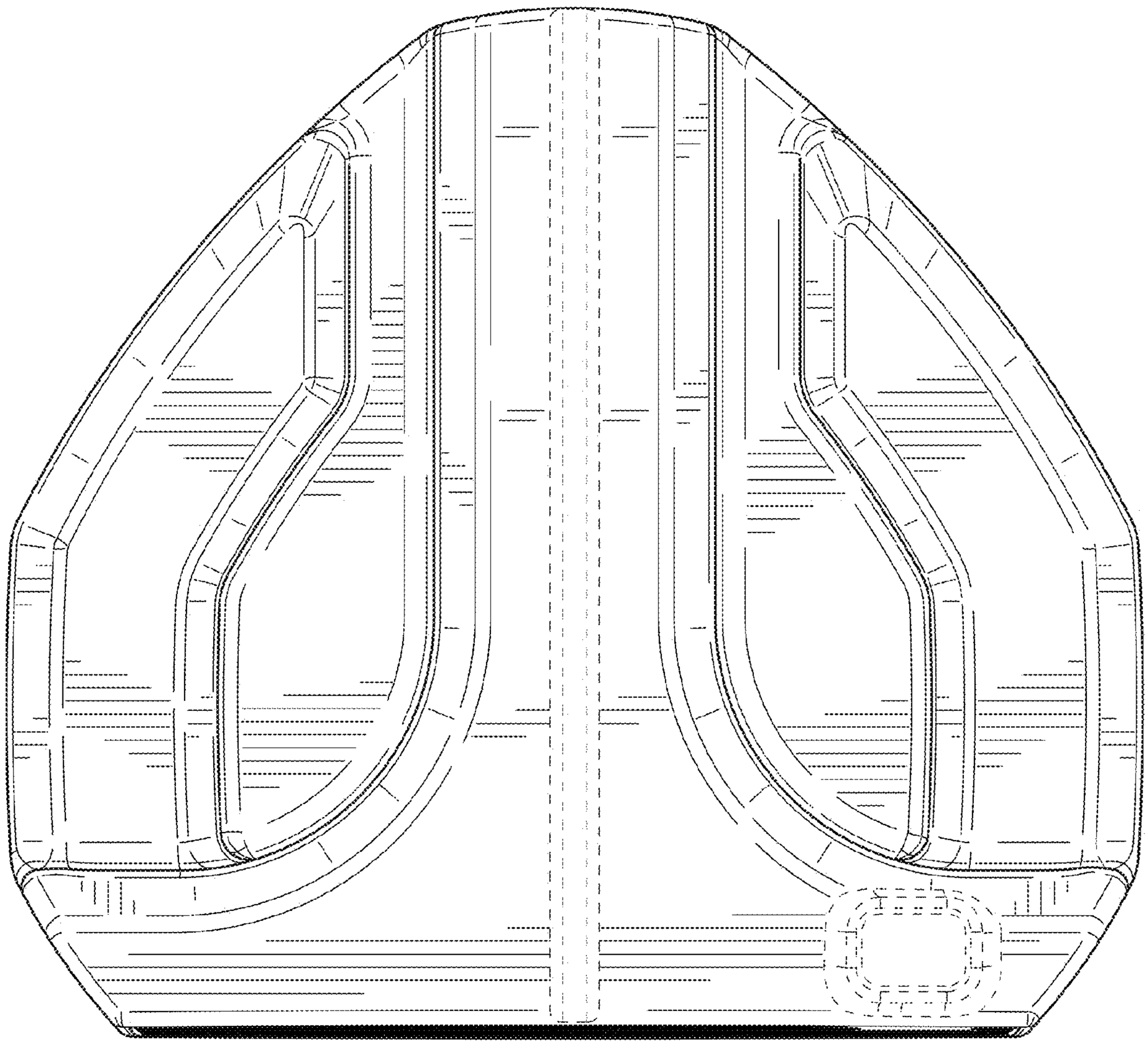

FIG. 21

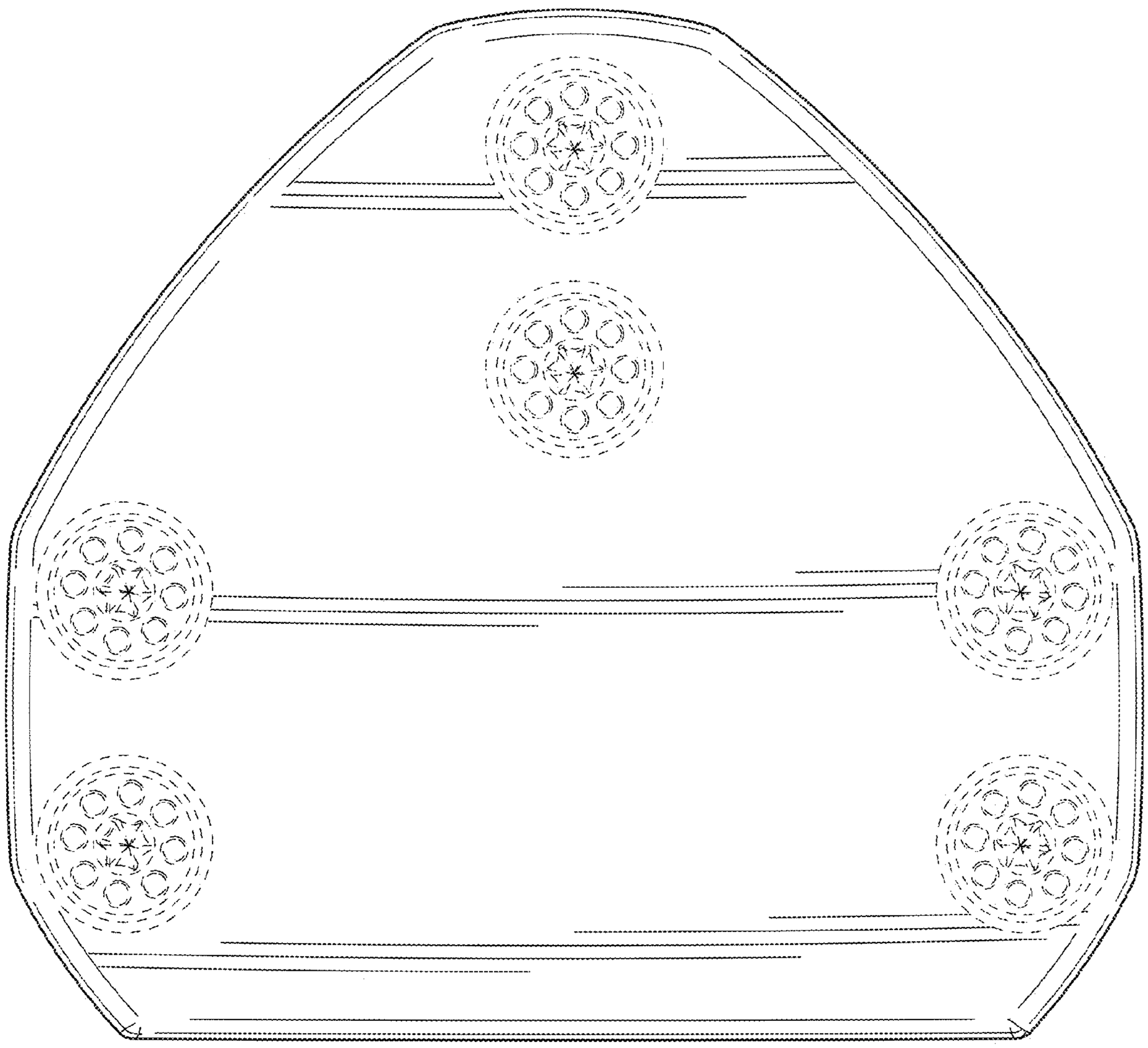

FIG. 22

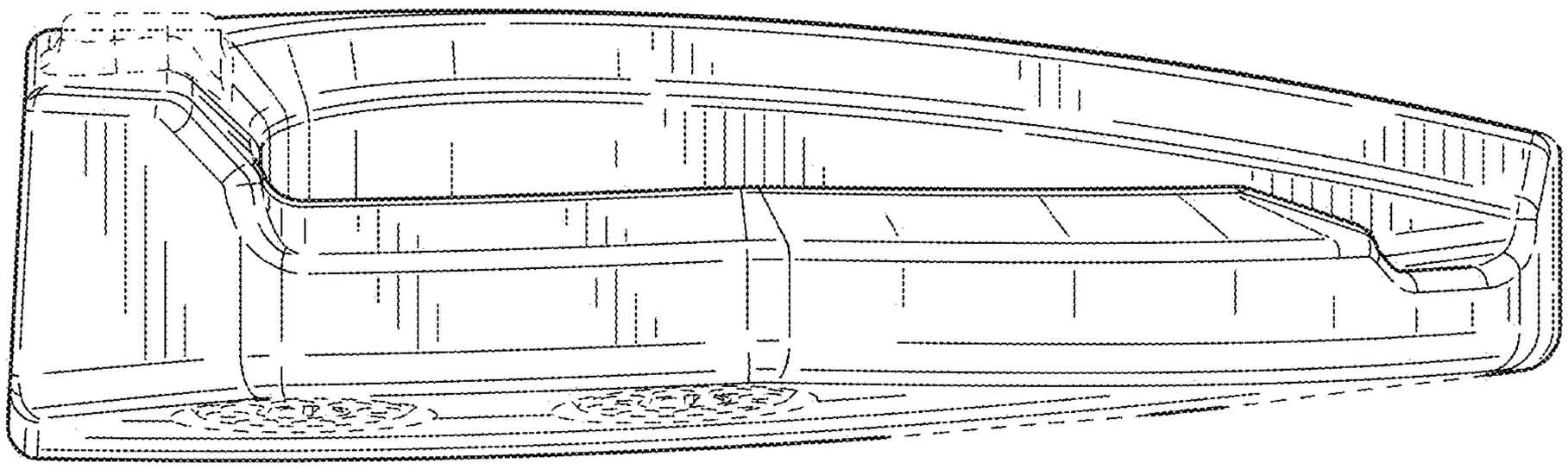

FIG. 23

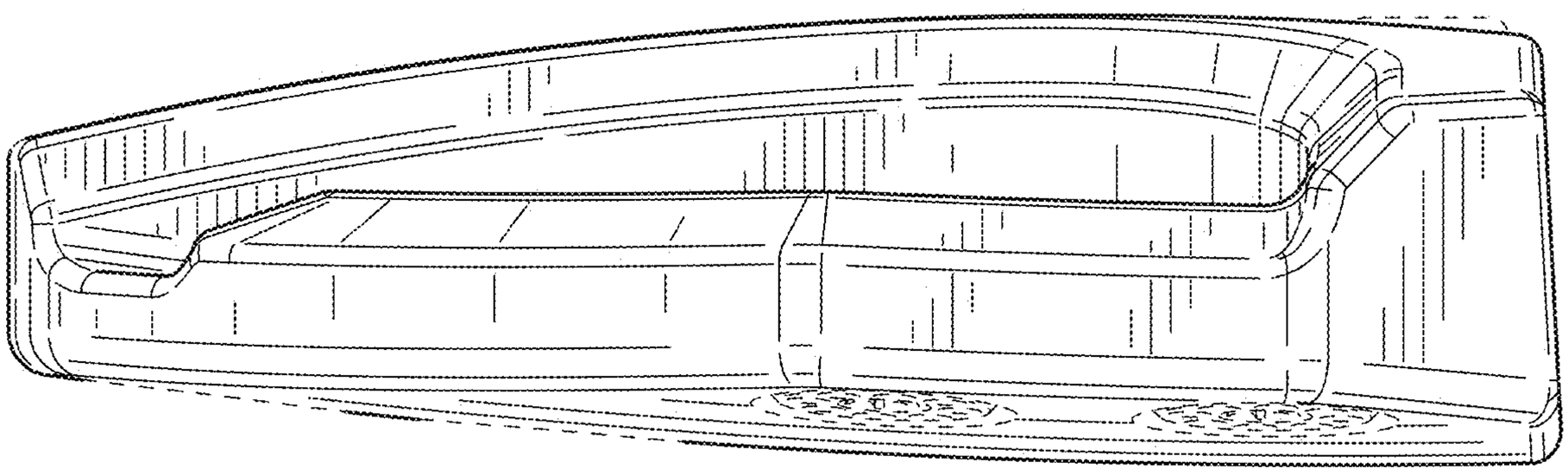

FIG. 24