US00D909239S

(12) United States Design Patent

Choi et al.

(10) Patent No.: US D909,239 S
(45) Date of Patent: ** Feb. 2, 2021

(54) **SHELF FOR PLANT CULTIVATOR**

(71) Applicant: **LG ELECTRONICS INC.**, Seoul (KR)

(72) Inventors: **Kyukwan Choi**, Seoul (KR); **Sunil Cho**, Seoul (KR); **Joosang Kim**, Seoul (KR); **Minsub Kim**, Seoul (KR)

(73) Assignee: **LG Electronics Inc.**, Seoul (KR)

(**) Term: **15 Years**

(21) Appl. No.: **29/698,497**

(22) Filed: **Jul. 17, 2019**

(30) **Foreign Application Priority Data**

Jan. 18, 2019 (WO) 79334

(51) **LOC (13) Cl.** **11-02**

(52) **U.S. Cl.**
USPC **D11/155**

(58) **Field of Classification Search**
USPC D11/143–156, 164; D6/403, 404, 405, D6/677.3, 678.2; D7/553.3, 554.3
CPC A01G 9/021; A01G 9/022; A01G 9/0293; A01G 9/0295; A01G 9/027; A01G 9/029; A01G 9/08; A01G 9/16; A47G 7/00; A47G 7/02; A47G 7/041; A47G 7/044; A47G 7/047; A47G 7/06; A47G 7/08
See application file for complete search history.

(56) **References Cited**

U.S. PATENT DOCUMENTS

D17,127 S * 2/1887 Clark D19/103
1,979,664 A * 11/1934 Birkenhauer A21B 3/132 249/120
D132,963 S * 7/1942 Salomon D3/313
D148,455 S * 1/1948 Bleich D19/92
2,501,379 A * 3/1950 Cranston A47F 3/14 206/509
D199,684 S * 12/1964 Lombardo D7/553.2
3,273,700 A * 9/1966 Moreau et al. B44D 3/04 206/1.7
D206,761 S * 1/1967 Kirwan D7/553.5
D207,406 S * 4/1967 Van Meter D7/357
(Continued)

Primary Examiner — Elizabeth A. Albert
(74) *Attorney, Agent, or Firm* — Birch, Stewart, Kolasch & Birch, LLP

(57) **CLAIM**

The ornamental design for a shelf for plant cultivator, as shown and described.

DESCRIPTION

FIG. **1** is a front perspective view of a shelf for plant cultivator showing our new design;
FIG. **2** is a front view thereof;
FIG. **3** is a back view thereof;
FIG. **4** is a left view thereof where the right view is a mirror image;
FIG. **5** is a top view thereof where the bottom view is a mirror image;
FIG. **6** is a perspective view in a condition that the one of the shelves is slid forward;
FIG. **7** is a front view of FIG. **6**;
FIG. **8** is a back view of FIG. **6**;
FIG. **9** is a left view of FIG. **6** where the right view is a mirror image;
FIG. **10** is a top view of FIG. **6**;
FIG. **11** is a bottom view of FIG. **6**;
FIG. **12** is an exploded perspective view of FIG. **6**;
FIG. **13** is another exploded perspective view of FIG. **6**; and,
FIG. **14** is still another exploded perspective view of FIG. **6**.
The broken lines are included to show portions of the shelf for plant cultivator that form no part of the claimed design.

1 Claim, 14 Drawing Sheets

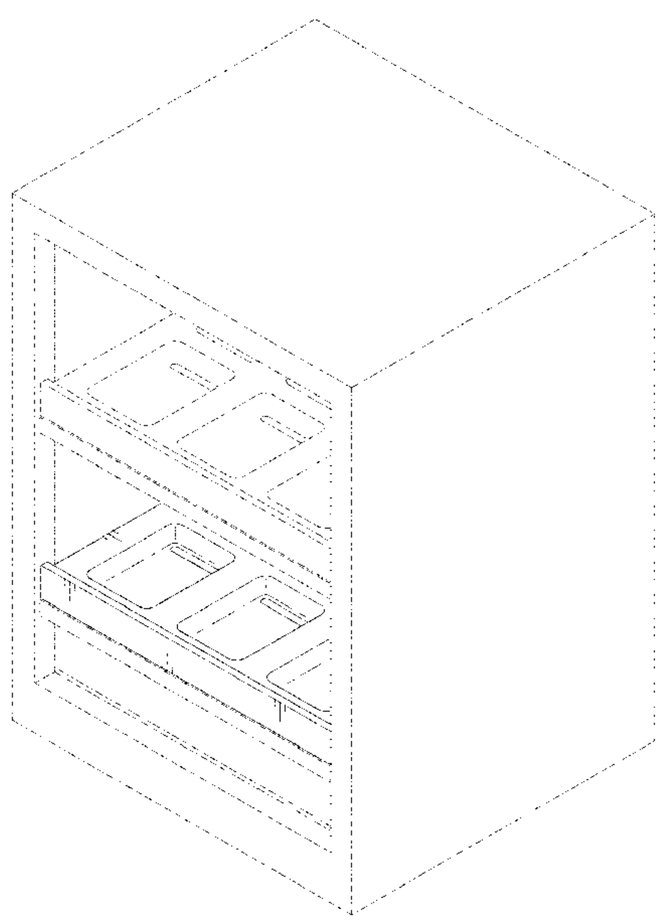

(56) **References Cited**

U.S. PATENT DOCUMENTS

D214,523	S	*	6/1969	Stone	D7/553.3
3,707,806	A	*	1/1973	Toews	G09F 1/04 47/87
D236,365	S	*	8/1975	Fox	D11/156
3,982,655	A	*	9/1976	Kaupert	B65D 1/36 220/23.6
4,648,524	A	*	3/1987	Ackermann	A47B 88/969 220/507
4,834,262	A	*	5/1989	Reed	B65F 1/004 220/23.6
4,872,723	A	*	10/1989	Kopf	B60N 3/002 297/216.1
4,905,836	A	*	3/1990	Lindgren	B64D 1/16 206/557
D311,210	S	*	10/1990	Bottcher	D19/103
D338,808	S	*	8/1993	Anderson	D7/549
D355,333	S	*	2/1995	Campbell	D7/553.2
5,547,082	A	*	8/1996	Royer	H05K 13/0084 206/725
D380,961	S	*	7/1997	Schnack	D9/425
D419,772	S	*	2/2000	Williams	D3/201
D444,480	S	*	7/2001	Shultz, Jr.	D15/90
D452,078	S	*	12/2001	Dembicks	D3/313
D453,309	S	*	2/2002	Katz	D11/155
RE37,821	E	*	8/2002	VanWingerden	A01G 9/0295 47/73
D466,758	S	*	12/2002	Bradley	220/23.8
D492,195	S	*	6/2004	Shabaz	D9/737
D574,182	S	*	8/2008	Shannon	D7/357
D708,891	S	*	7/2014	Smallegan	D7/357
D840,249	S	*	2/2019	Payne	D9/760
D884,798	S	*	5/2020	Hsu	D21/342

* cited by examiner

FIG. 1

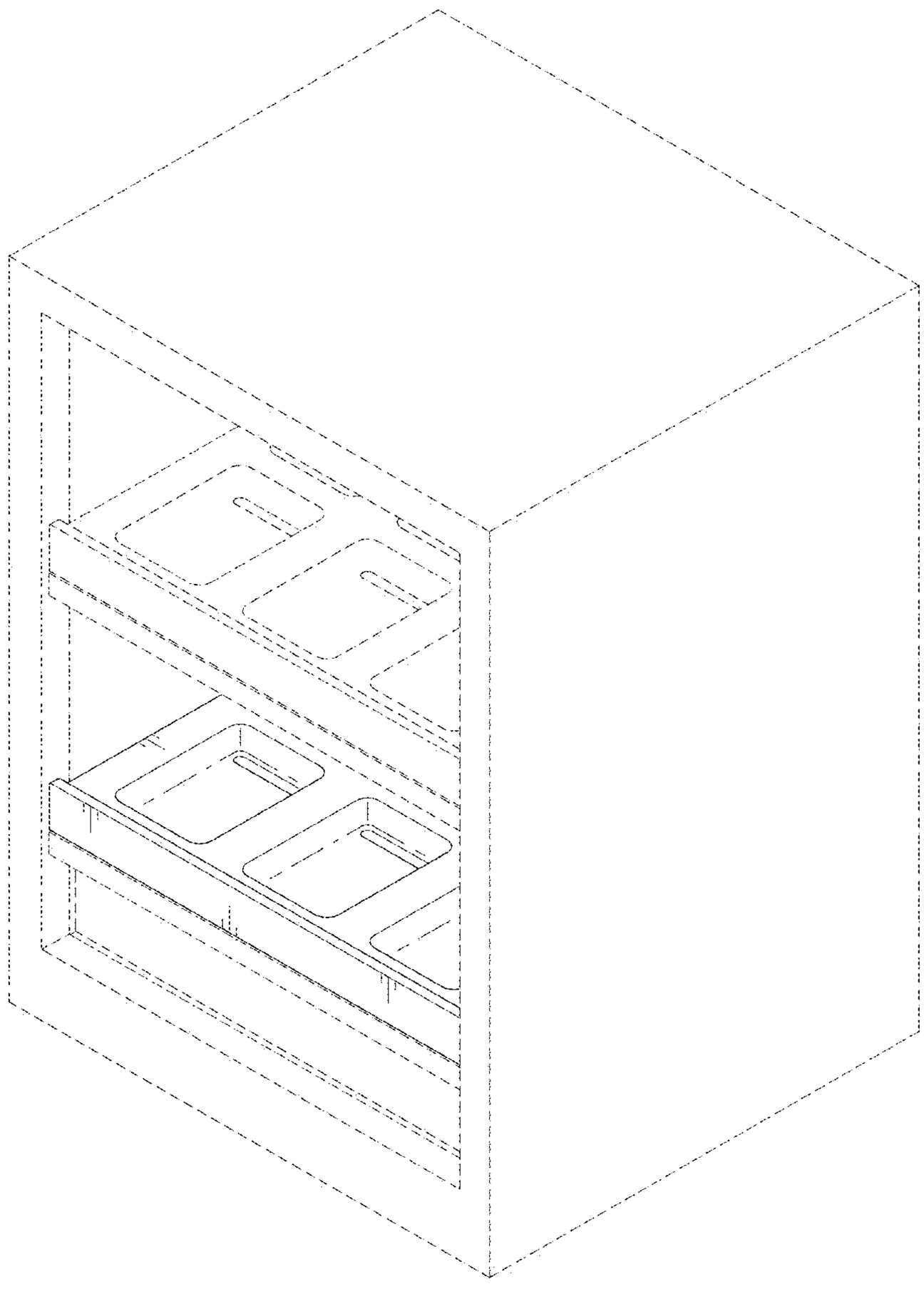

FIG. 2

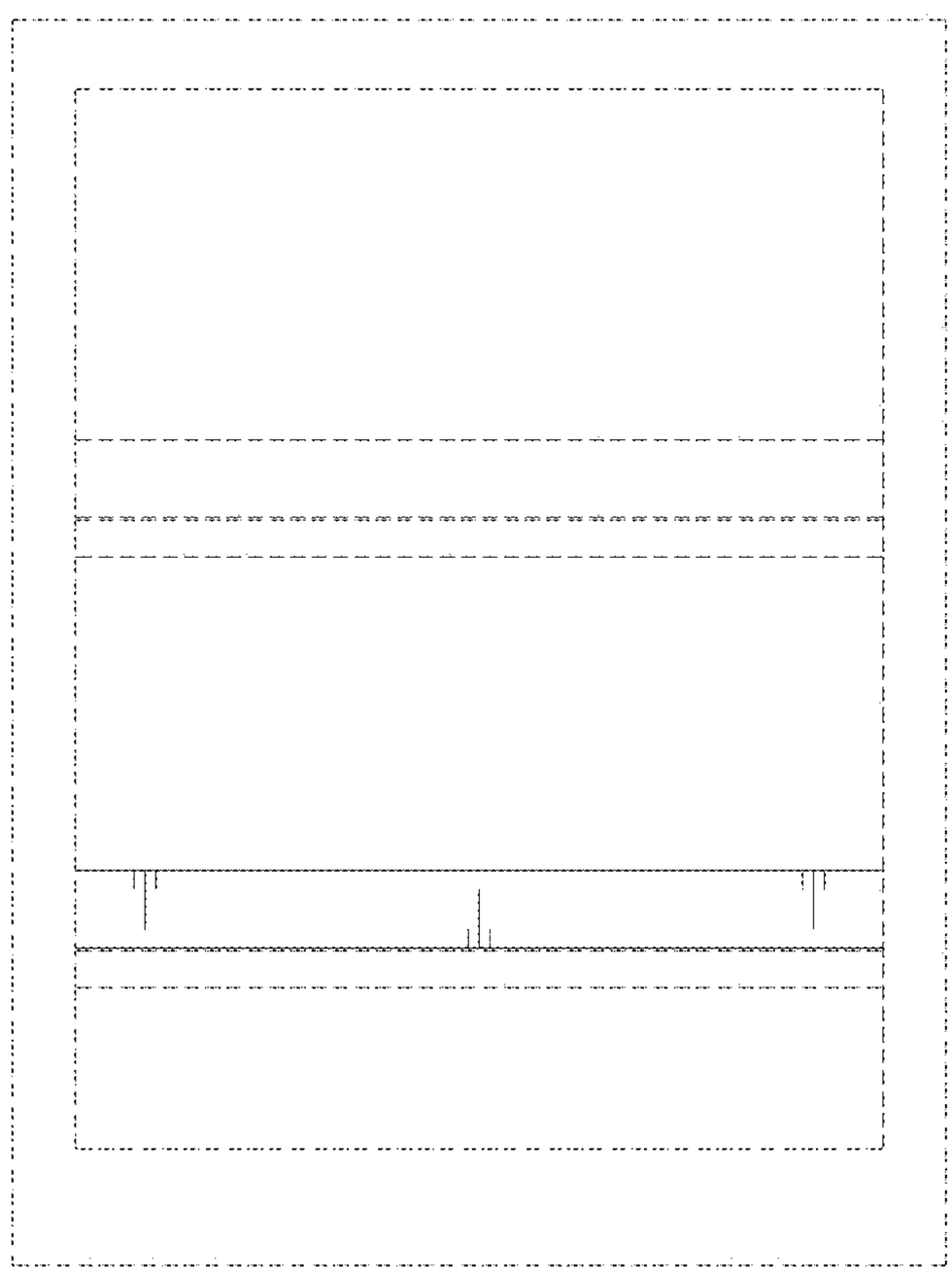

FIG. 3

FIG. 4

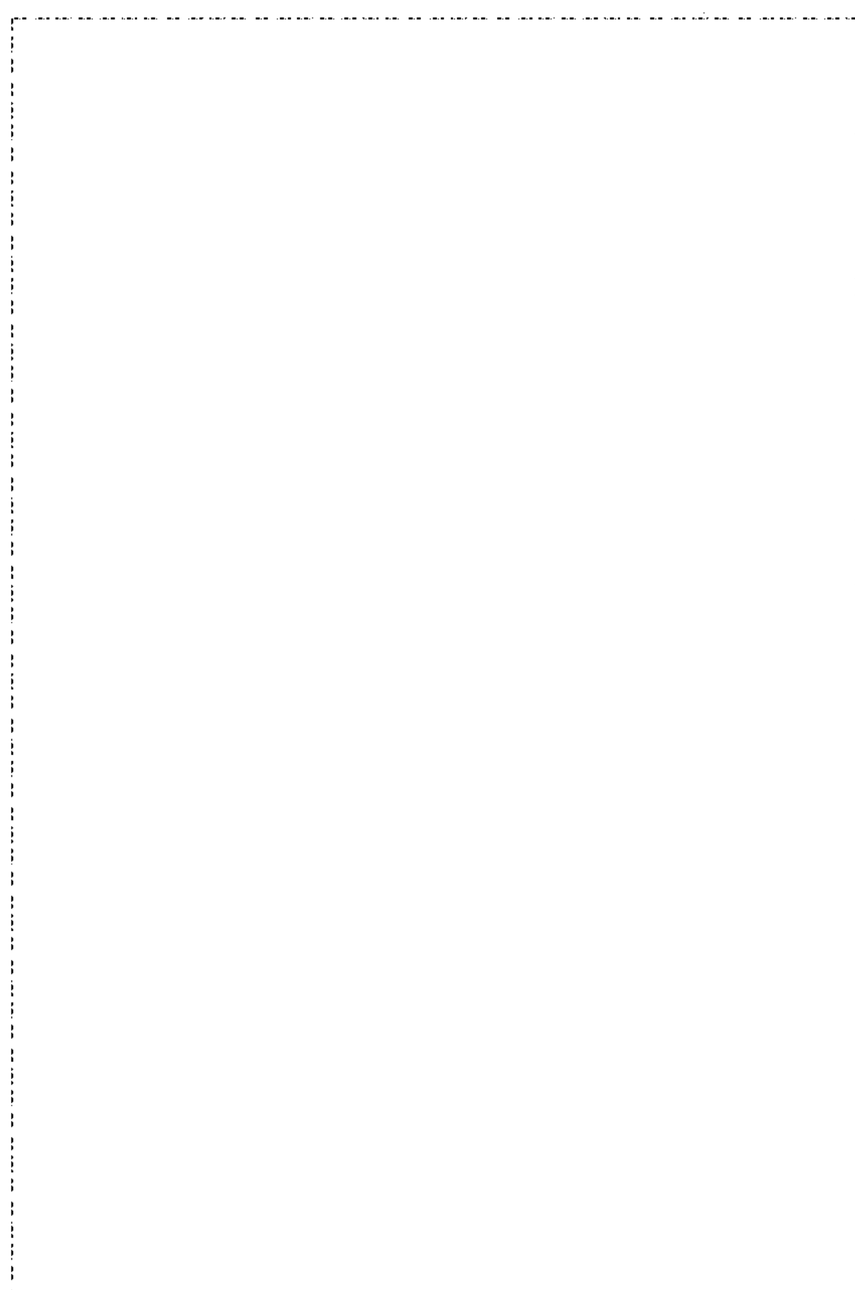

FIG. 5

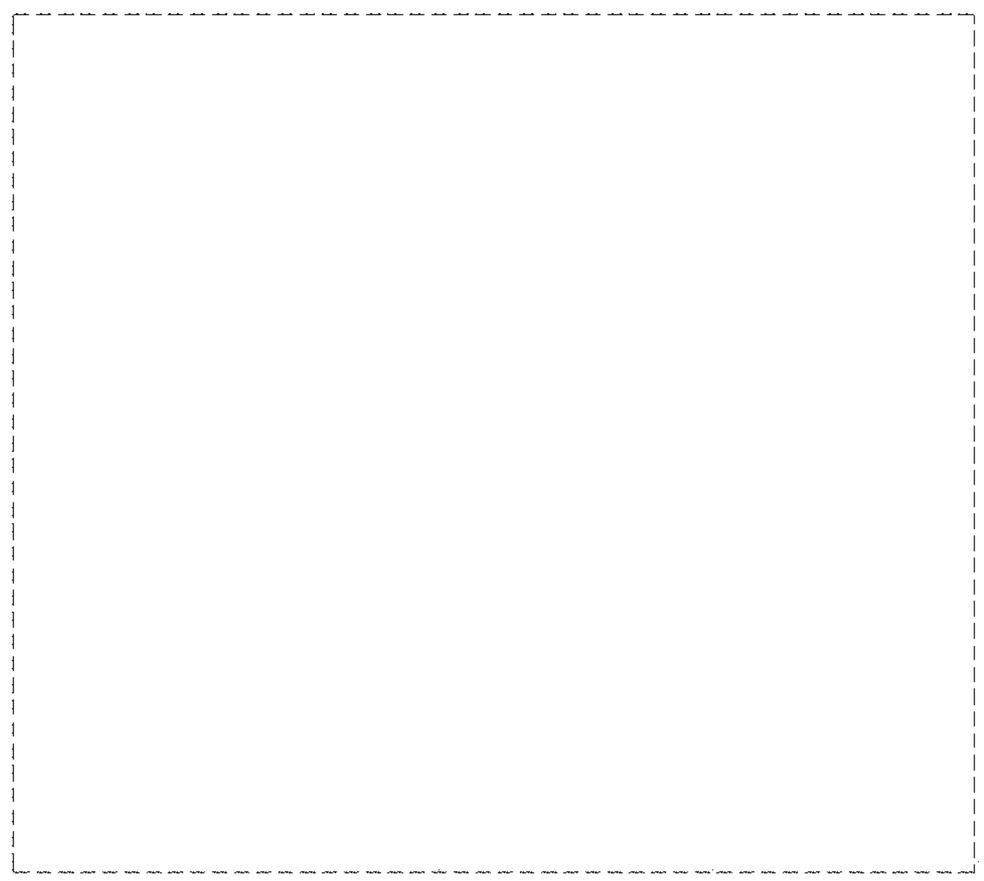

FIG. 6

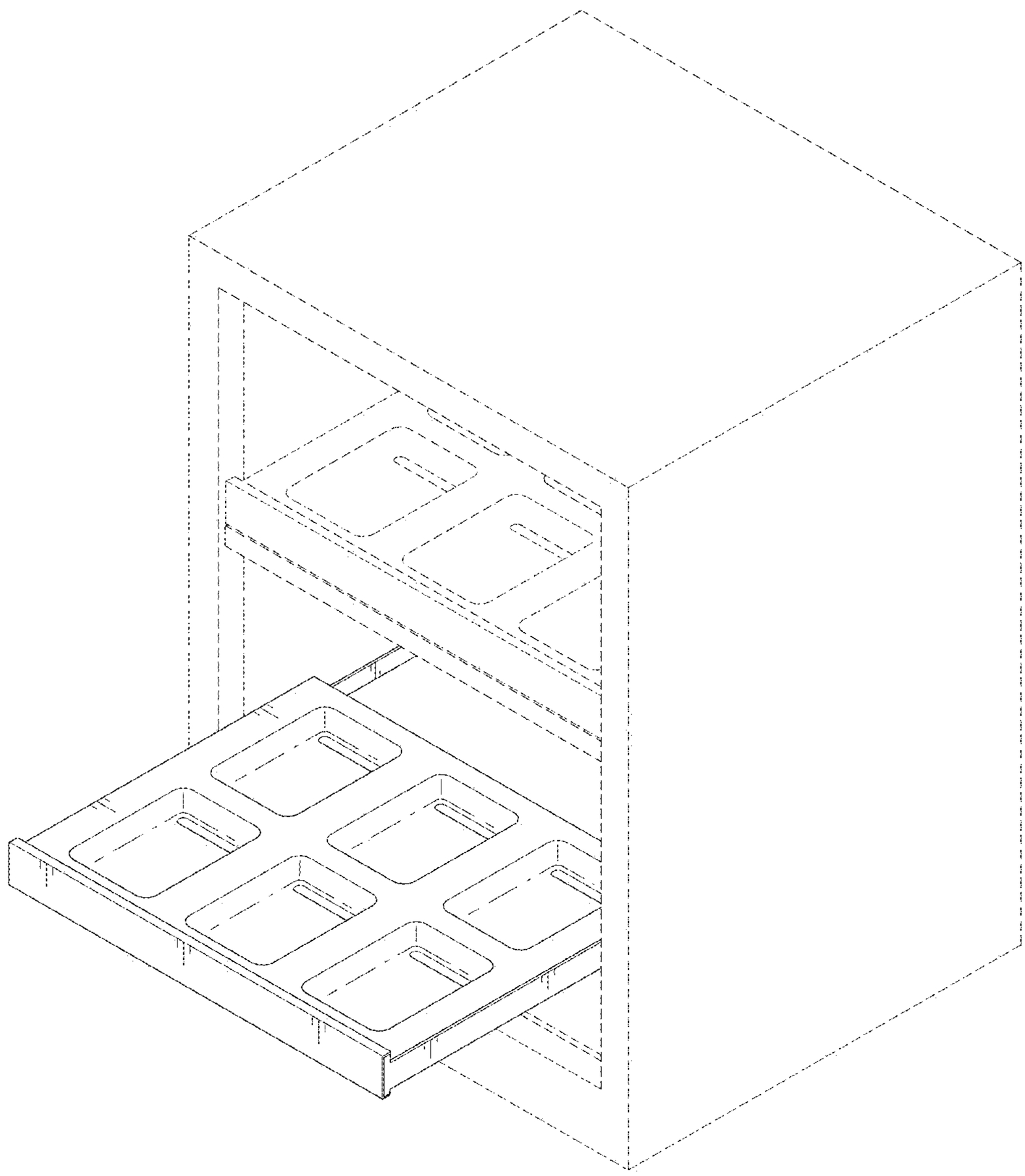

FIG. 7

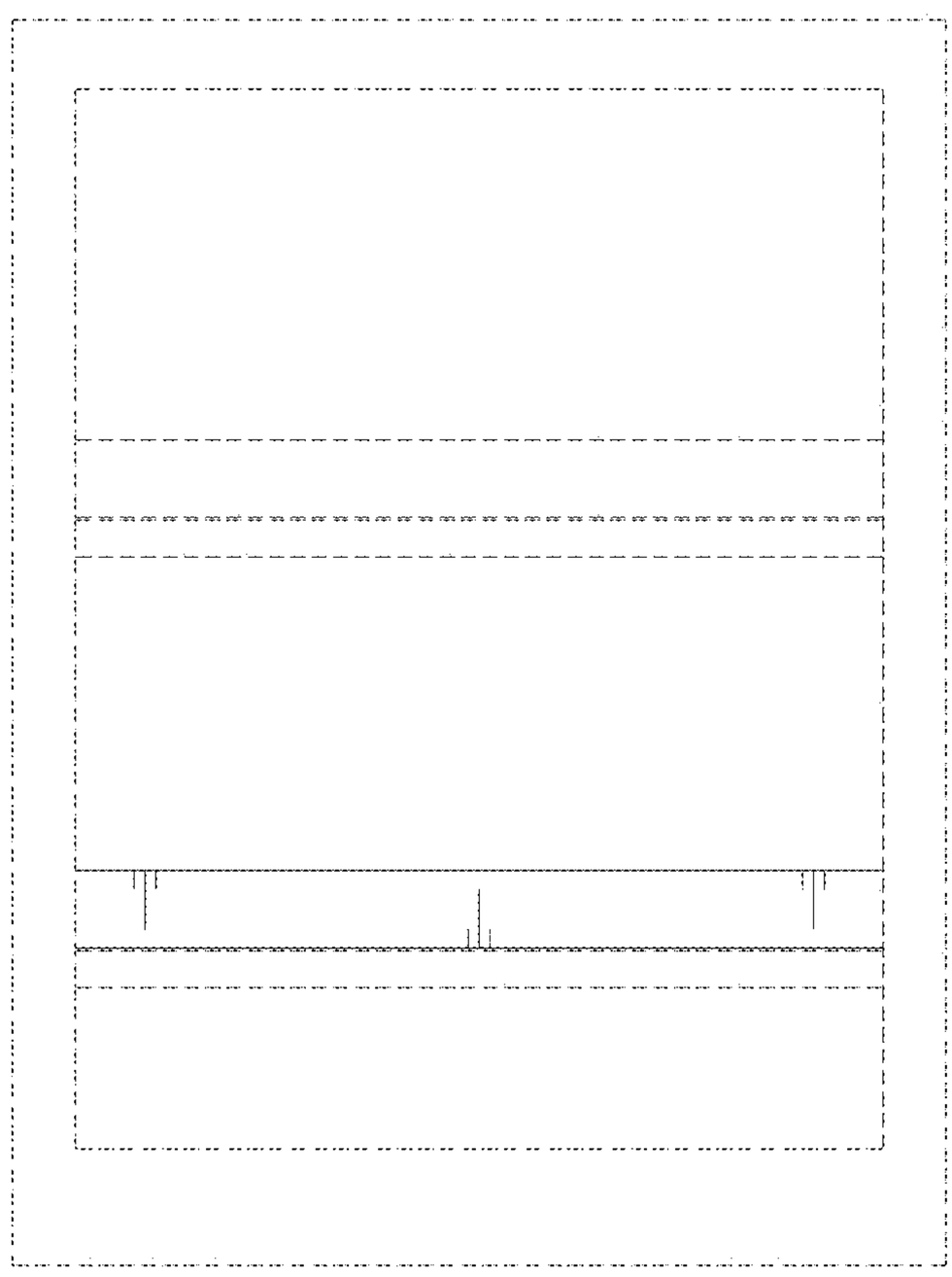

FIG. 8

FIG. 9

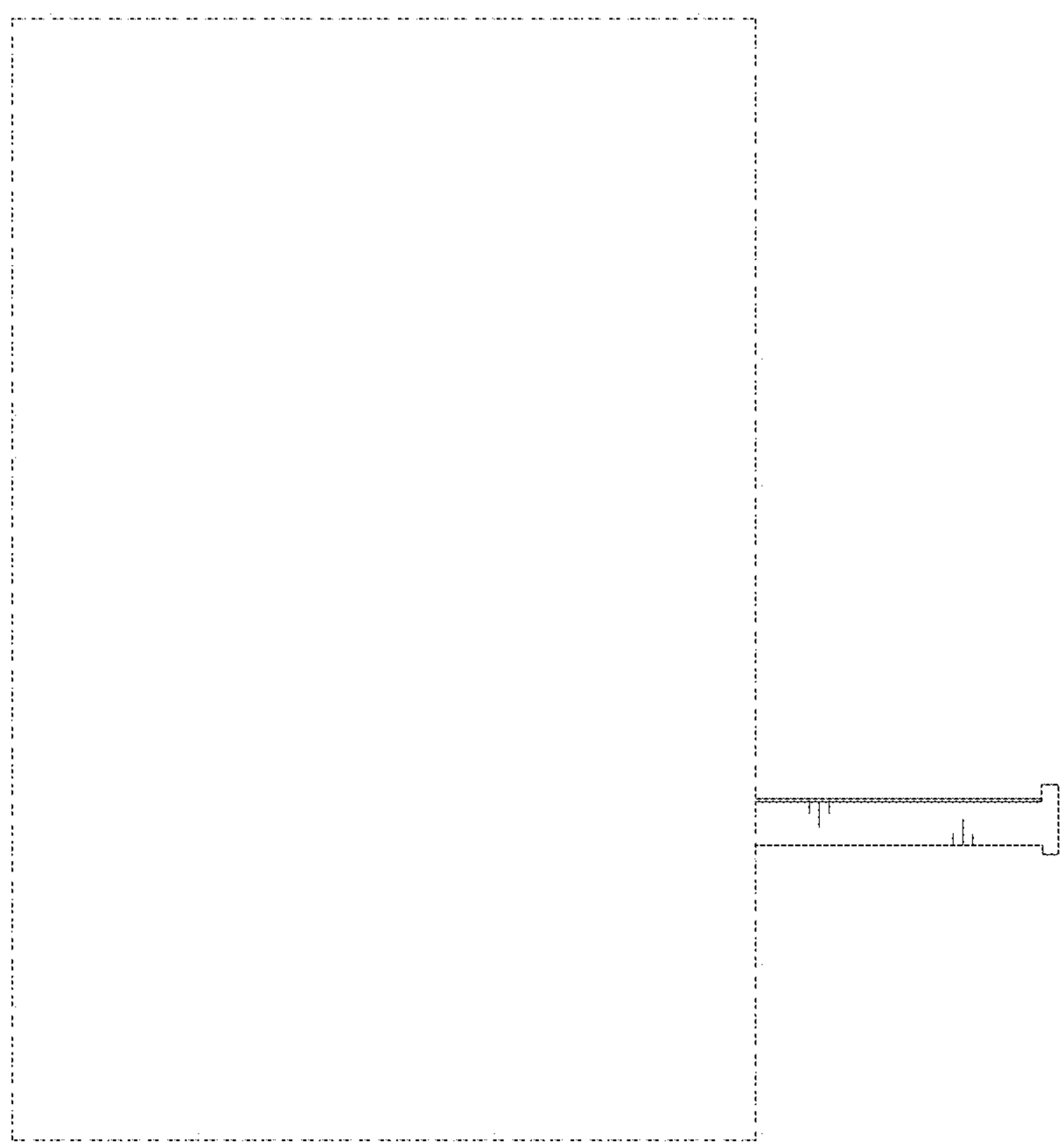

FIG. 10

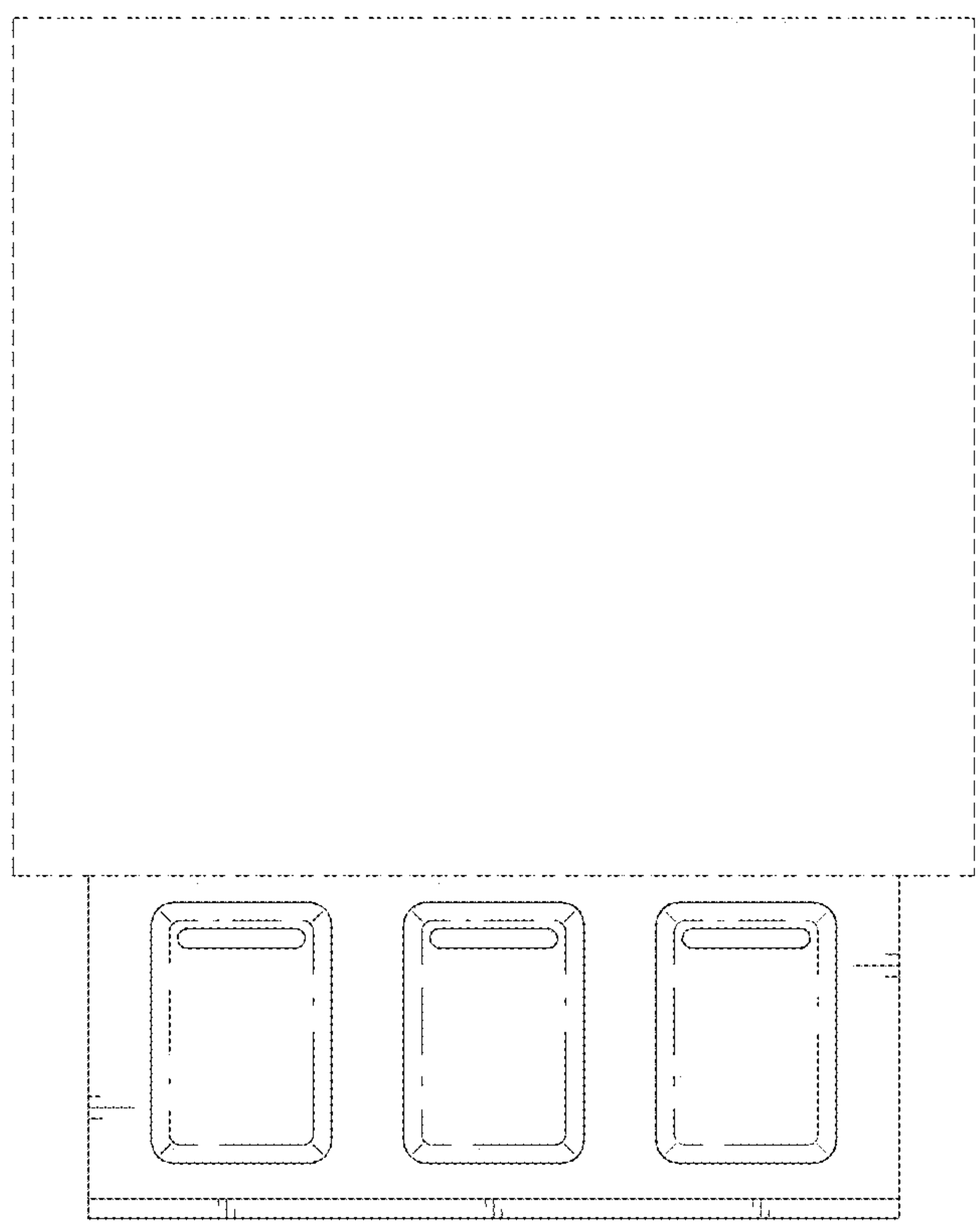

FIG. 11

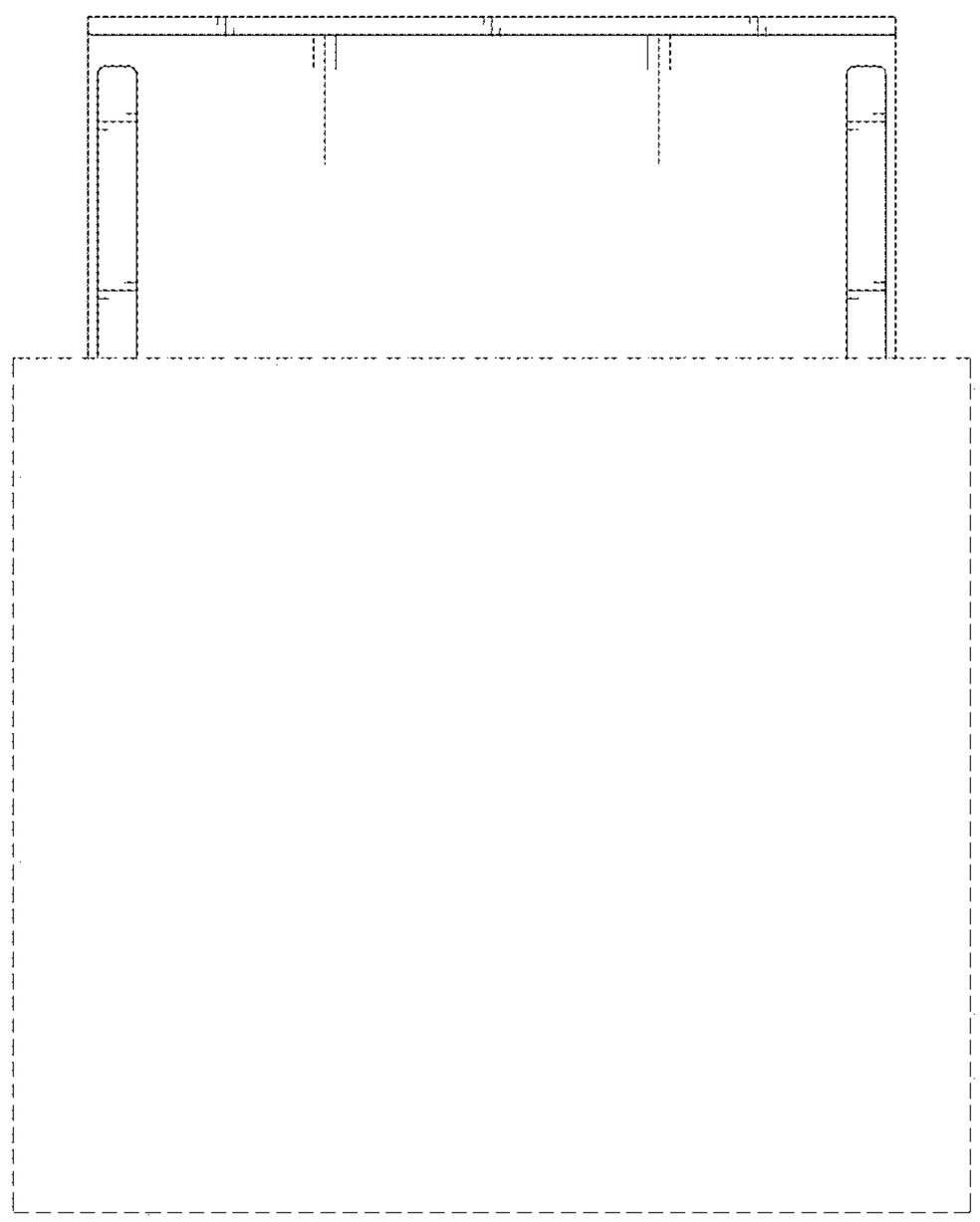

FIG. 12

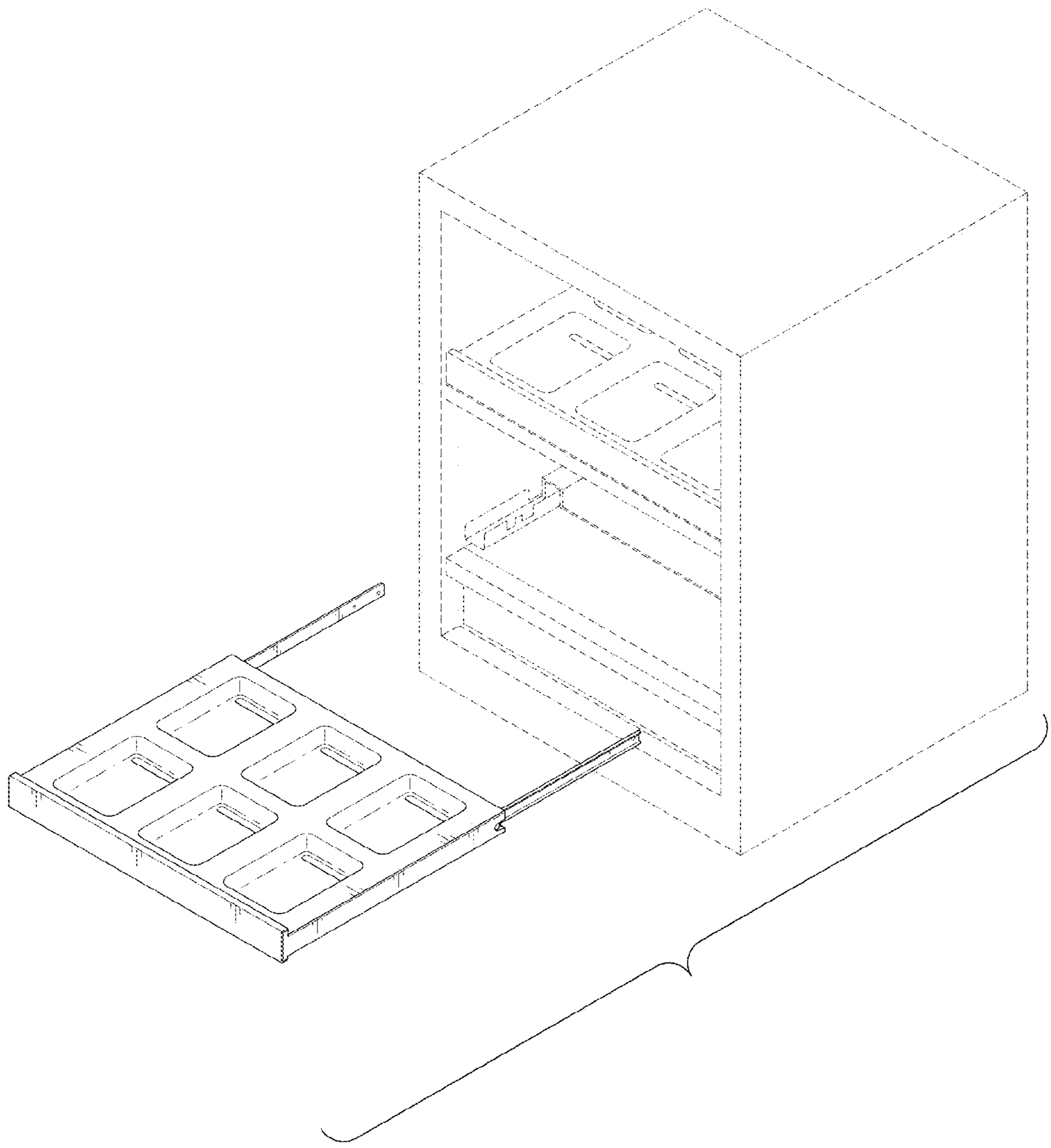

FIG. 13

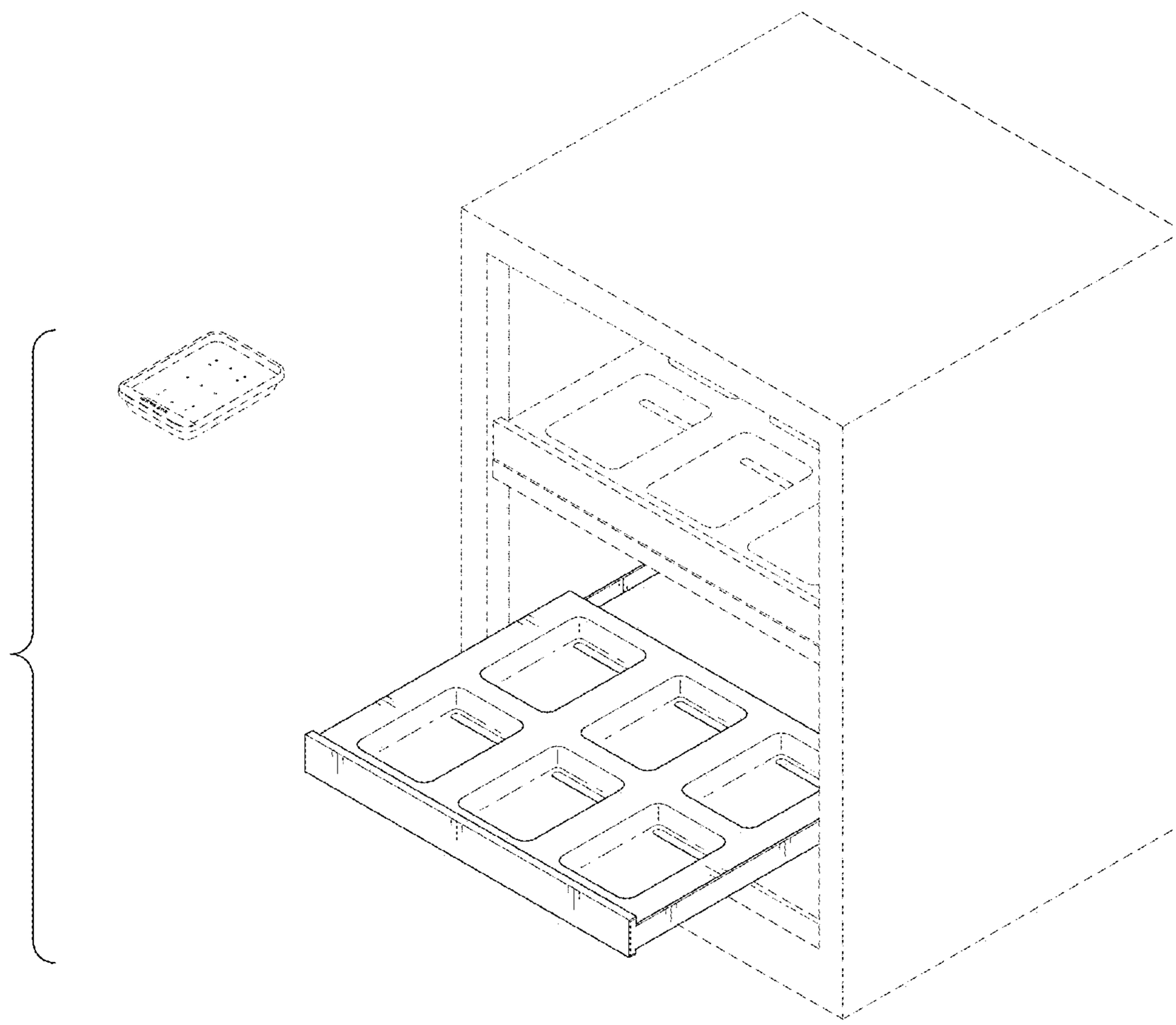
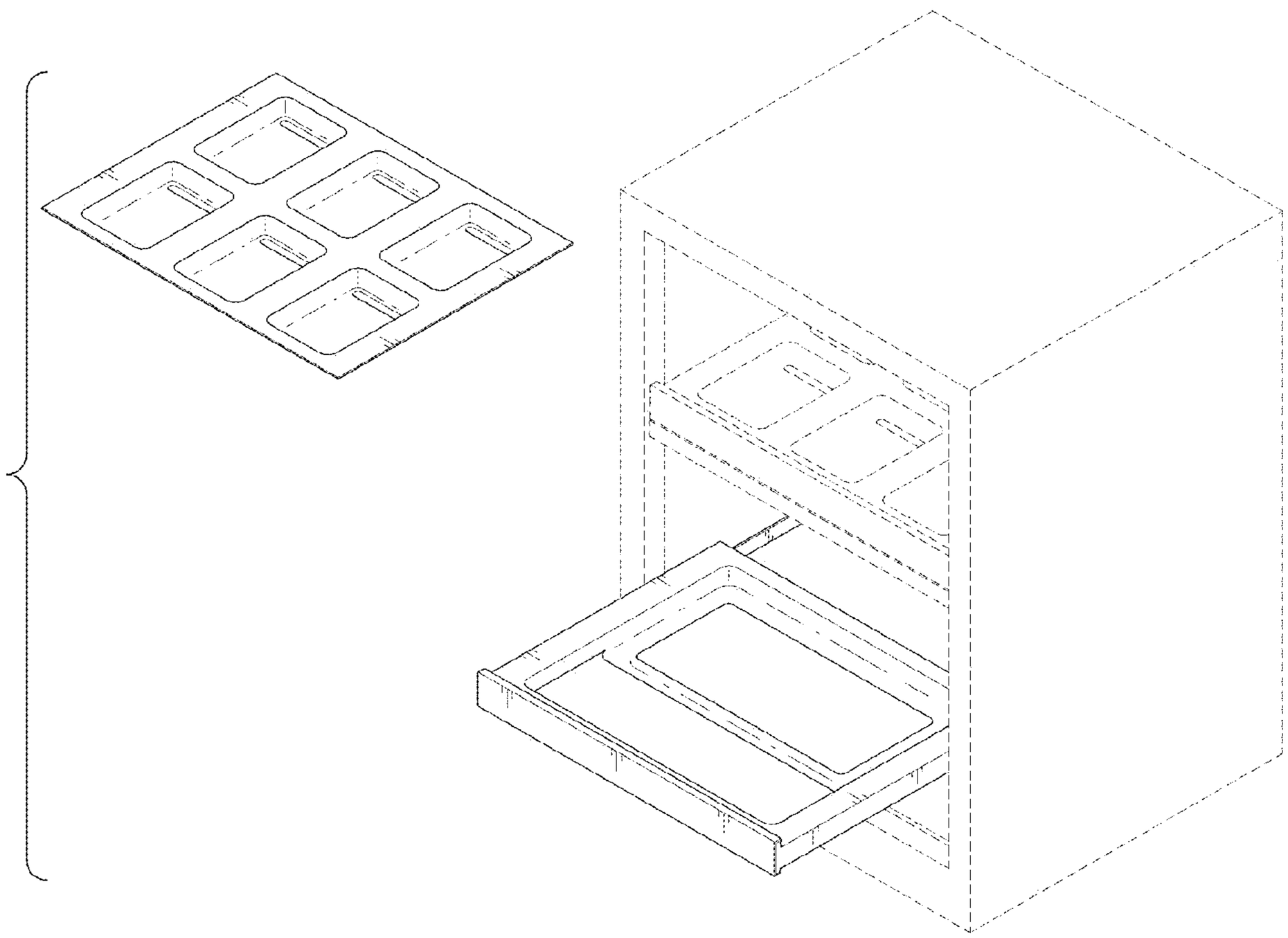
FIG. 14