US00D907971S

(12) United States Design Patent

Whitlock et al.

(10) Patent No.: US D907,971 S
(45) Date of Patent: ** Jan. 19, 2021

(54) **CUTTING BOARD**

(71) Applicants: **Paul Whitlock**, Santa Monica, CA (US); **Valerie Whitlock**, Santa Monica, CA (US)

(72) Inventors: **Paul Whitlock**, Santa Monica, CA (US); **Valerie Whitlock**, Santa Monica, CA (US)

(**) Term: **15 Years**

(21) Appl. No.: **29/700,220**

(22) Filed: **Jul. 31, 2019**

(51) **LOC (13) Cl.** **07-04**

(52) **U.S. Cl.**
USPC **D7/698**

(58) **Field of Classification Search**
USPC D7/543, 549, 550.1, 553.4, 553.5, 555, D7/586, 590, 686, 698–699; D23/308; D32/55–57
CPC A47B 77/02; A47G 23/06; A47J 47/00; A47J 47/02; A47J 47/005; A47J 47/20; B26D 7/0006; B26D 7/018; B26D 7/20; B23D 21/00; B23K 37/04; B23K 37/053; B23Q 16/001
See application file for complete search history.

(56) **References Cited**

U.S. PATENT DOCUMENTS

3,305,124 A * 2/1967 Whiteford A47G 23/06 206/564
D238,135 S * 12/1975 Longobardi D7/698
D308,461 S * 6/1990 Hosea A47G 19/06 D7/507
D339,507 S * 9/1993 Ancona D7/553.4
D352,205 S * 11/1994 Swetharanyam D7/507
5,363,755 A * 11/1994 Liang A47B 77/02 241/273.2
D364,072 S * 11/1995 Keable D7/553.5
D383,943 S * 9/1997 Boley D7/353
6,371,470 B1 * 4/2002 Ward A47J 47/005 269/13
D587,031 S * 2/2009 Pourounidis A47J 47/005 D7/698
D631,952 S * 2/2011 Marcoff D23/308
D655,939 S * 3/2012 Tracy D7/698
D883,044 S * 5/2020 Poon D7/698

* cited by examiner

Primary Examiner — Ricky Pham

(57) **CLAIM**

The ornamental design for a cutting board, as shown and described.

DESCRIPTION

FIG. **1** is a perspective view of our new design;
FIG. **2** is a top view thereof;
FIG. **3** is a bottom view thereof;
FIG. **4** is a first end view thereof;
FIG. **5** is a second end view thereof;
FIG. **6** is a first side view thereof;
FIG. **7** is a second side view thereof; and,
FIG. **8** is a second perspective view thereof.
The broken lines shown in the drawings are for illustrative purposes only and form no part of the claimed design.

1 Claim, 6 Drawing Sheets

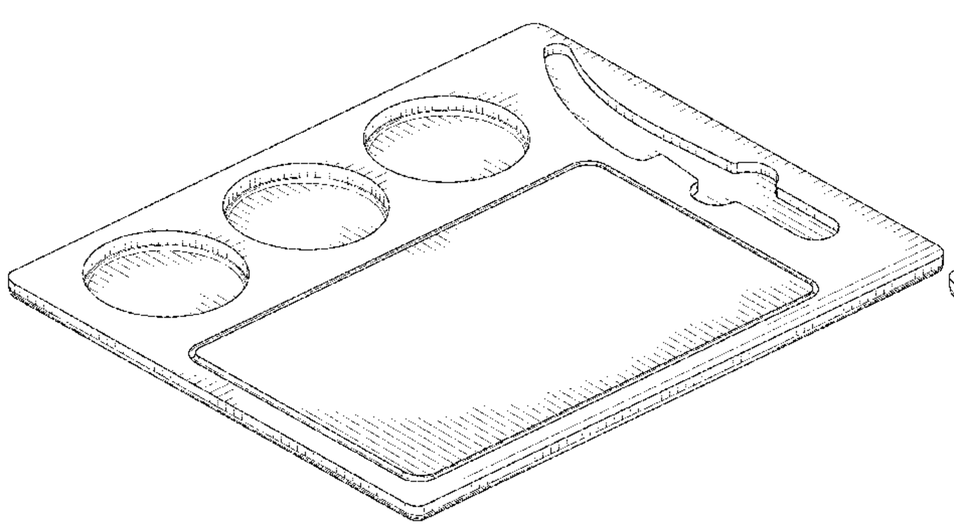

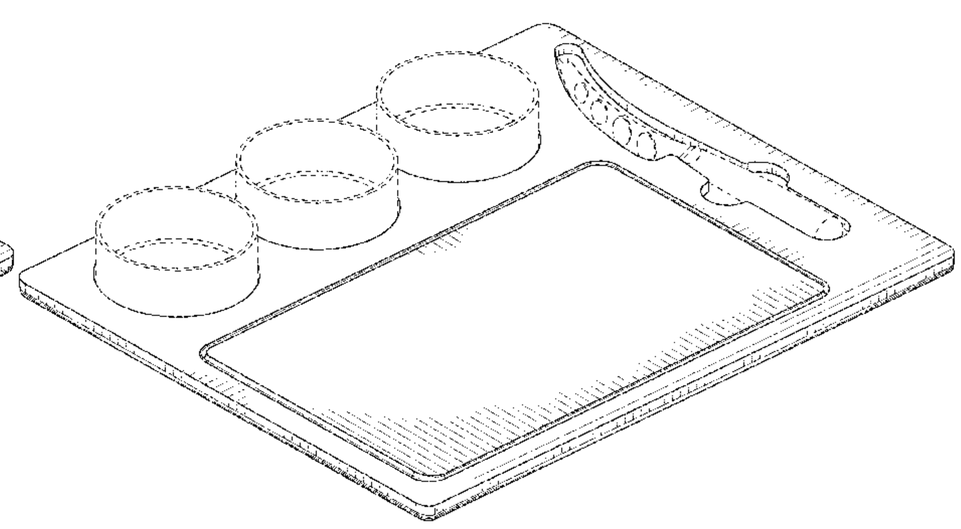

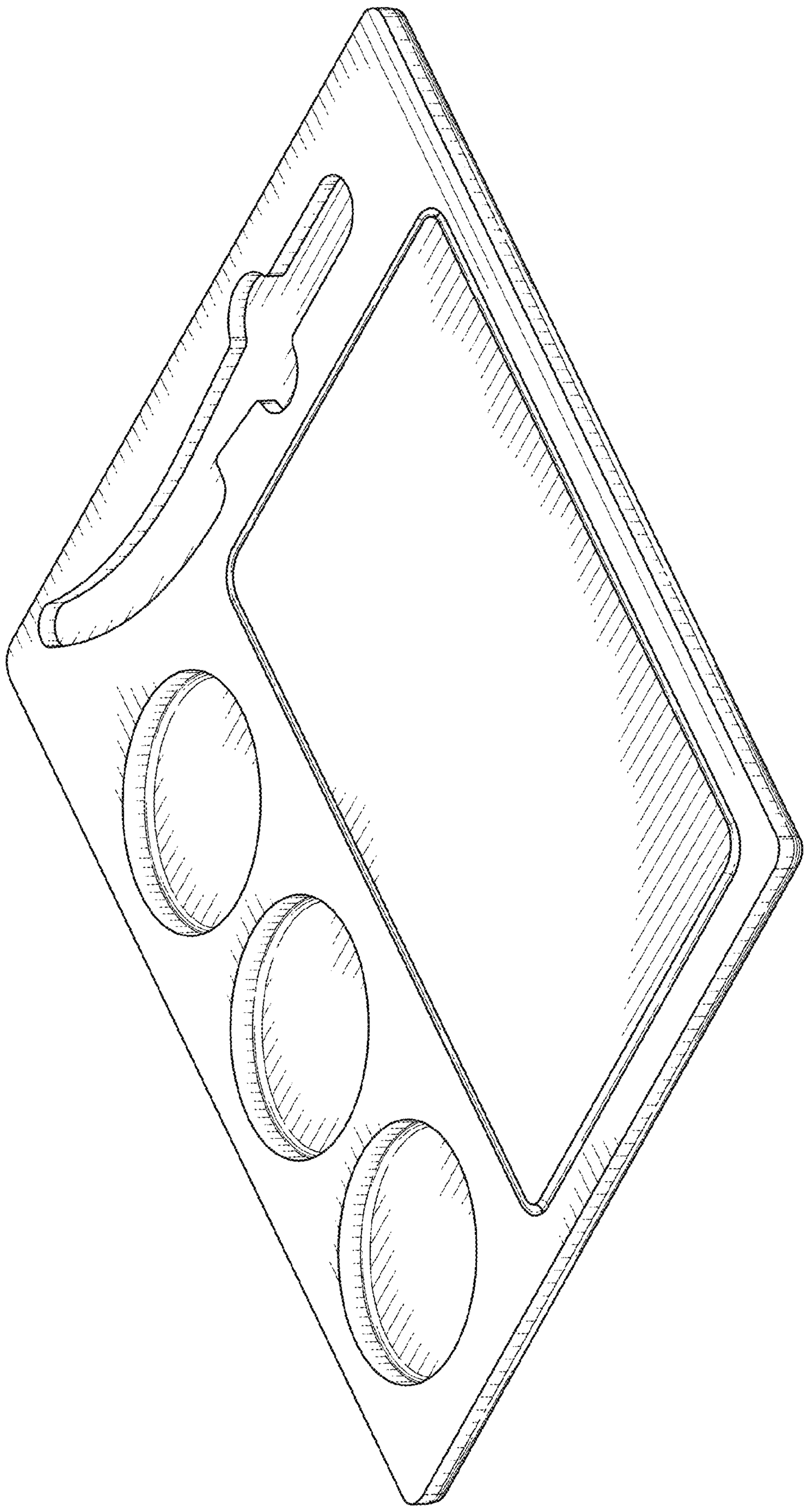

FIG. 1

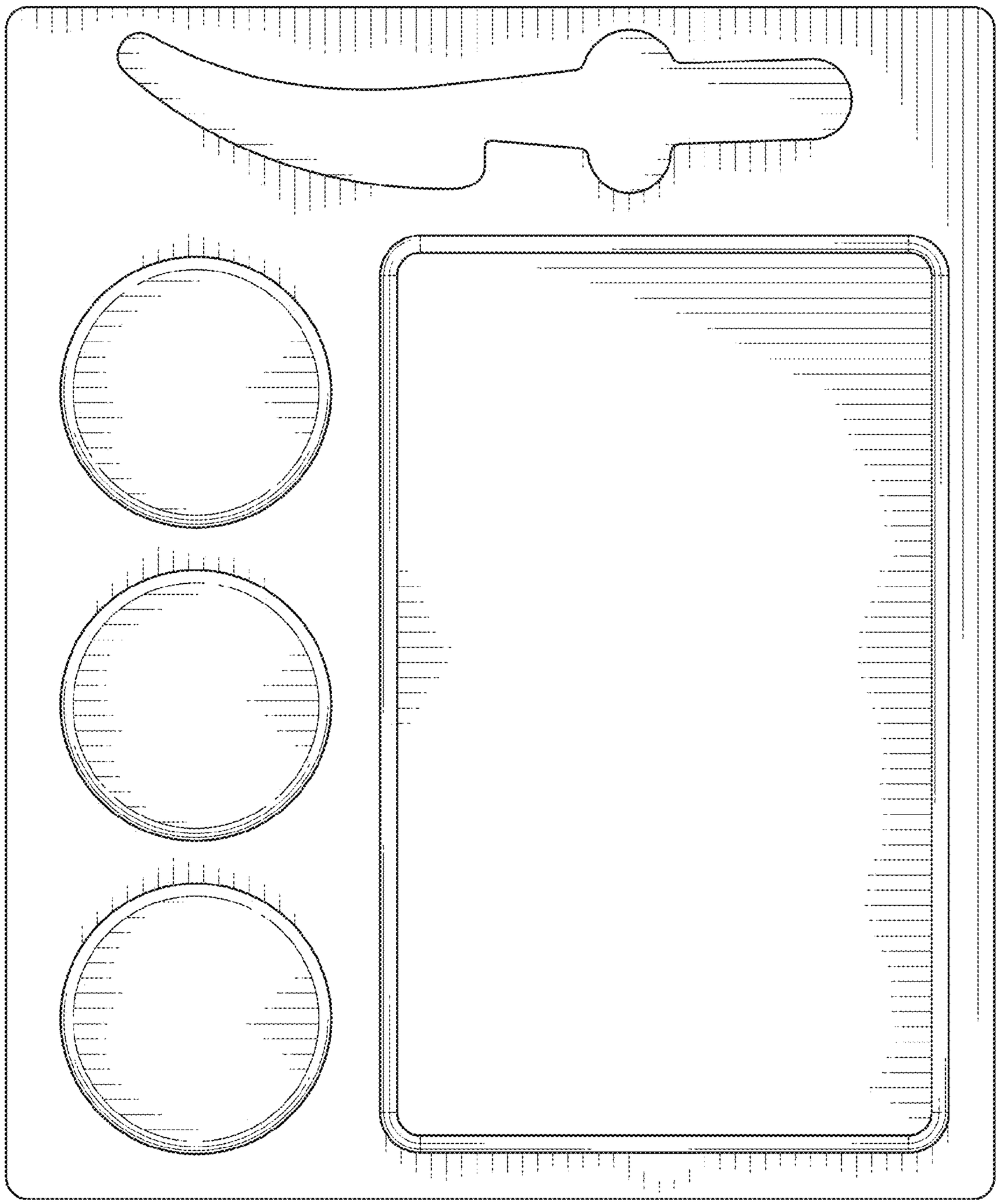

FIG. 2

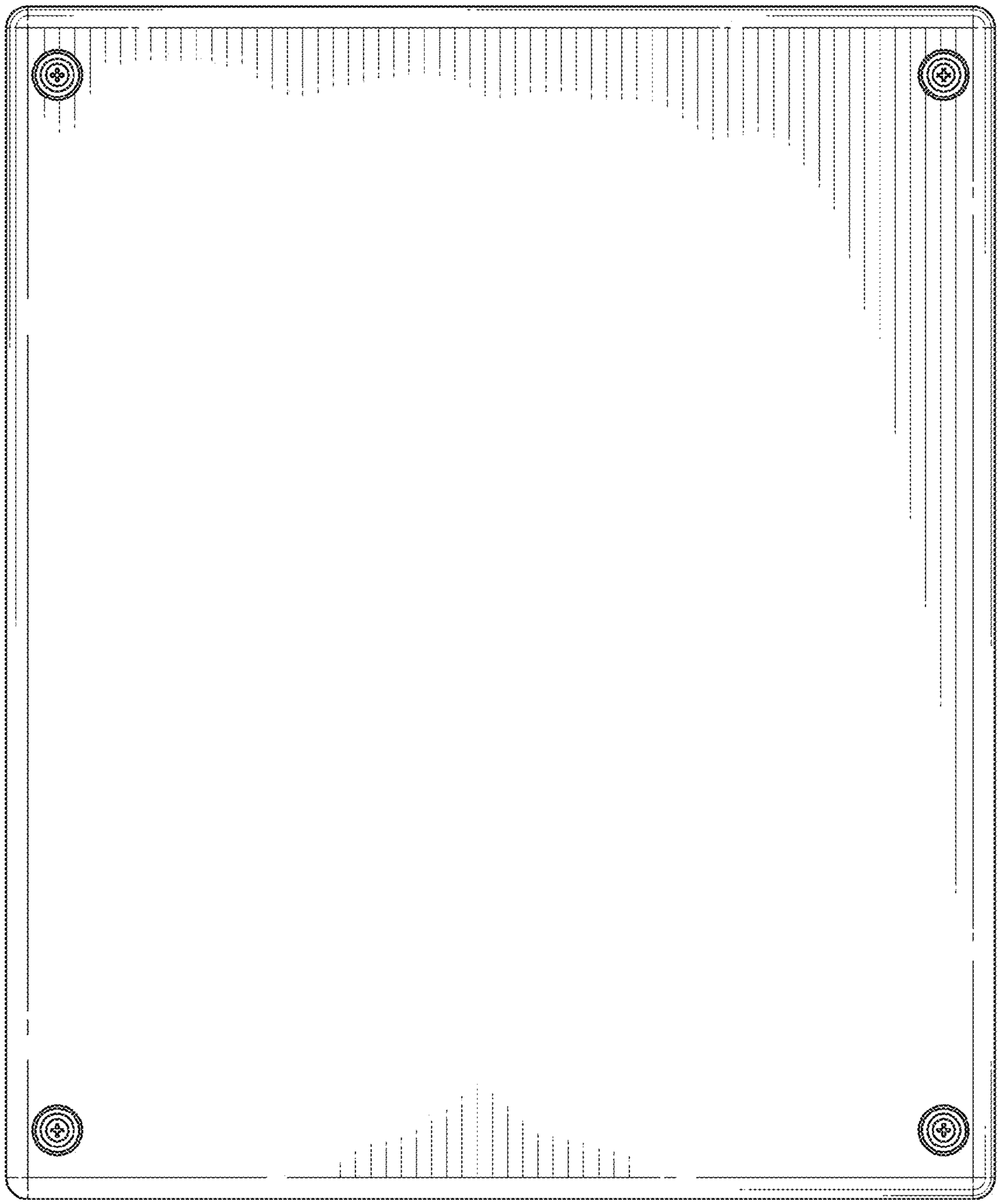

FIG. 3

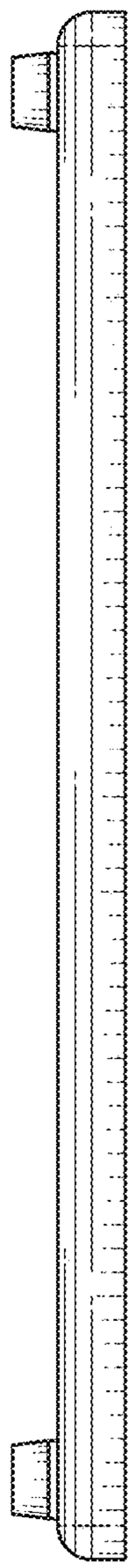

FIG. 4

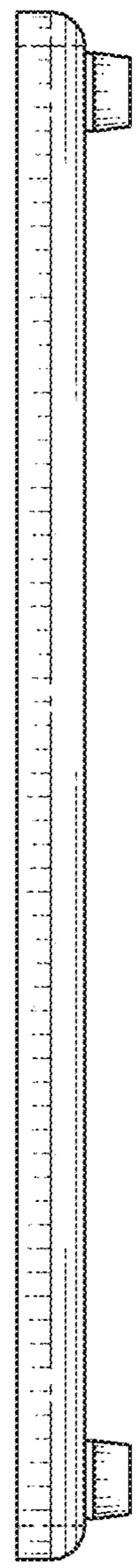

FIG. 5

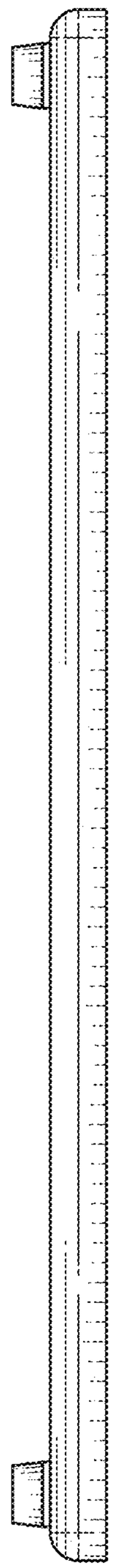

FIG. 6

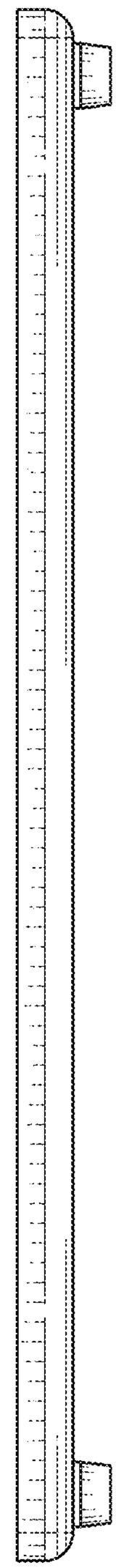

FIG. 7

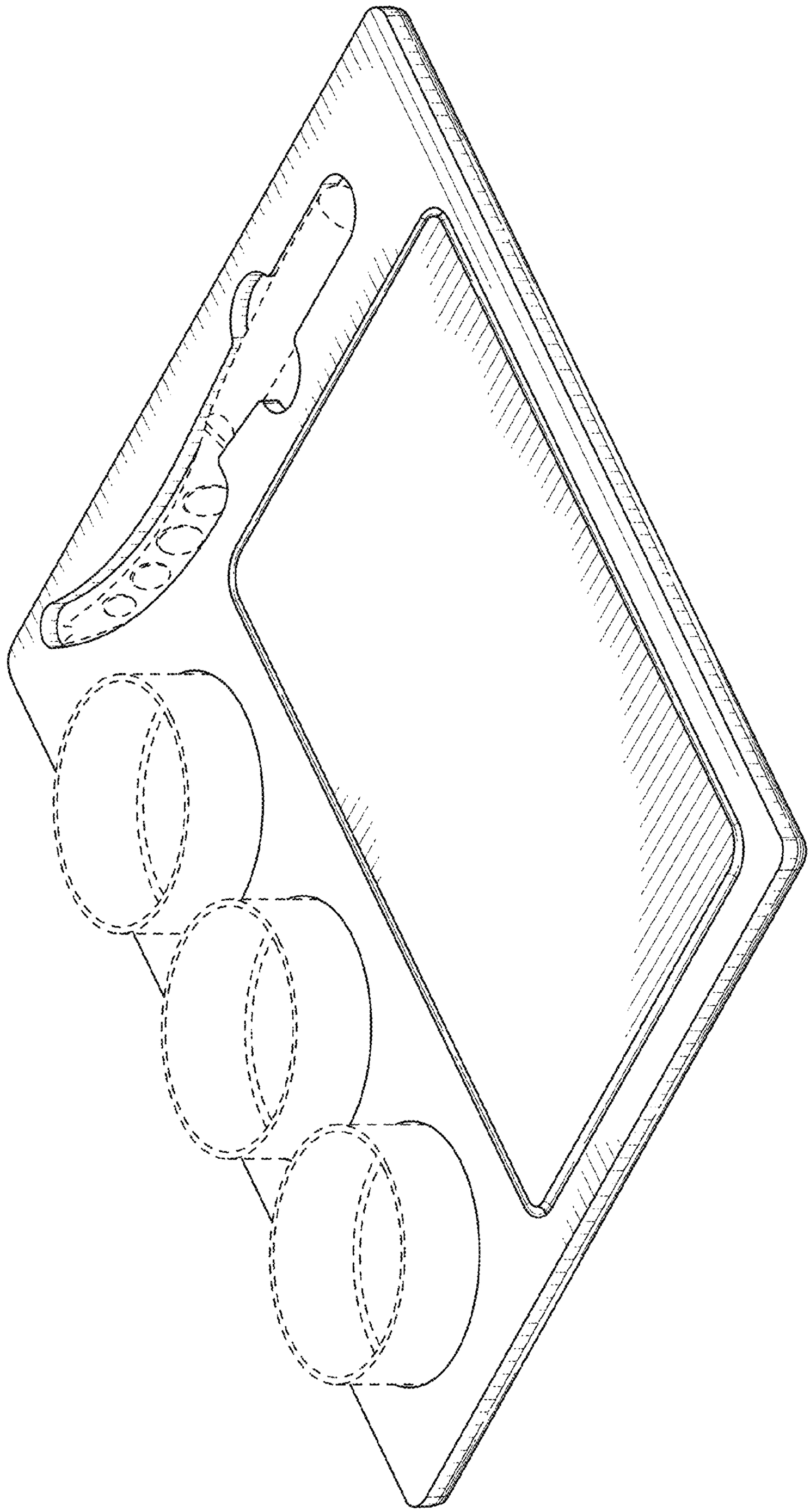

FIG. 8