US00D906988S

(12) United States Design Patent
Zimmer

(10) Patent No.: US D906,988 S
(45) Date of Patent: ** Jan. 5, 2021

(54) **ANGLED PRESSURE SWITCH**

(71) Applicant: **Trent Zimmer**, Houma, LA (US)

(72) Inventor: **Trent Zimmer**, Houma, LA (US)

(**) Term: **15 Years**

(21) Appl. No.: **29/747,763**

(22) Filed: **Aug. 25, 2020**

Related U.S. Application Data

(62) Division of application No. 29/644,572, filed on Apr. 18, 2018, now Pat. No. Des. 902,161.

(51) **LOC (13) Cl.** **13-03**

(52) **U.S. Cl.**
USPC **D13/158**; D13/171; D22/108

(58) **Field of Classification Search**
USPC D13/101, 123–125, 158–160, 168, 169, D13/171, 173, 174, 184, 199; D22/108–110, 199
CPC F41C 23/12; F41C 27/00; G08C 17/02; H01H 13/70; H01H 47/22; H01R 24/58; H01R 27/02; H01R 33/88; H01R 33/955; H05K 5/00
See application file for complete search history.

(56) **References Cited**

U.S. PATENT DOCUMENTS

D51,241	S	* 9/1917	Rotherberg	D13/174
D202,622	S	10/1965	Scanlon	
D204,060	S	* 3/1966	Simmons	D13/158
D281,580	S	12/1985	Stevens	
D316,539	S	4/1991	Judd et al.	
D319,628	S	9/1991	Whitley, II	
D335,281	S	5/1993	Thummel	
D415,117	S	10/1999	Belinky et al.	
D526,968	S	8/2006	Castaldo	
D538,237	S	3/2007	Castaldo	
D605,606	S	12/2009	Zheng	
D621,791	S	8/2010	Koskela et al.	
D674,858	S	1/2013	Galli	

(Continued)

OTHER PUBLICATIONS

LaRue Tactical, dated 2014, [online], [site visited Jun. 26, 2020]. Available from Internet, URL: https://www.larue.com/products/surefire-xt07-switch/#reviews-tab (Year: 2014).

(Continued)

Primary Examiner — Shawn T Gingrich
(74) *Attorney, Agent, or Firm* — Asgaard Patent Services, LLC; F. Wayne Thompson, Jr.

(57) **CLAIM**

The ornamental design for an angled pressure switch, as shown and described.

DESCRIPTION

FIG. **1** is a top, front, right side isometric view of an angled pressure switch;
FIG. **2** is a bottom, back, left side isometric view of the angled pressure switch shown in FIG. **1**;
FIG. **3** is a front view of the angled pressure switch shown in FIG. **1**;
FIG. **4** is a right side view of the angled pressure switch shown in FIG. **1**;
FIG. **5** is a back view of the angled pressure switch shown in FIG. **1**;
FIG. **6** is a left side view of the angled pressure switch shown in FIG. **1**;
FIG. **7** is a top view of the angled pressure switch shown in FIG. **1**; and,
FIG. **8** is a bottom view of the angled pressure switch shown in FIG. **1**.
The broken lines shown in the drawings represent portions of the angled pressure switch that form no part of the claimed design.

1 Claim, 6 Drawing Sheets

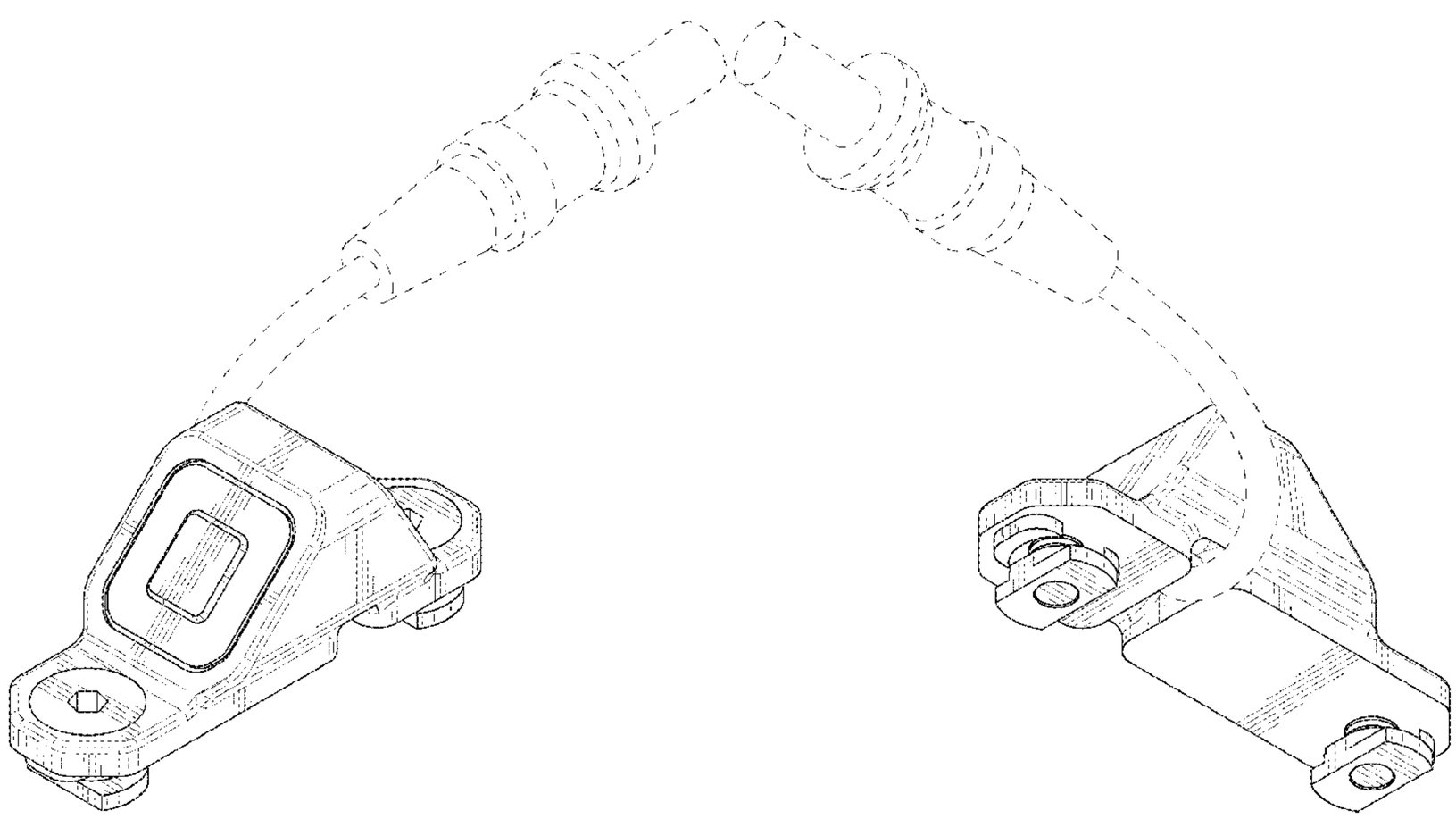

(56) **References Cited**

U.S. PATENT DOCUMENTS

D747,432	S	1/2016	Cheng et al.	
D757,125	S	5/2016	Furuki	
9,577,694	B1	2/2017	Albee	
D796,050	S	8/2017	Nishikawa et al.	
D807,981	S	1/2018	Cheng et al.	
D808,489	S	1/2018	Cheng et al.	
D818,555	S	5/2018	Faxon	
D823,266	S *	7/2018	Brown	D13/170
D841,758	S	2/2019	Novak	
10,781,086	B2 *	9/2020	August	G08C 17/02
2012/0144991	A1	6/2012	Hayden et al.	
2016/0211095	A1	7/2016	Zimmer	
2020/0143667	A1	5/2020	Zimmer	
2020/0224998	A1 *	7/2020	Kincel	F41C 27/00

OTHER PUBLICATIONS

Defense Review, dated Jun. 11, 2019, [online], [site visited Jun. 26, 2020]. Available from Internet, URL: https://www.defensereview.com /unity-tactical-hot-button-mlok-remote-pressure-switch-for-your-tactical-ar-15-rifle-carbine-sbr-white-light-and-laser-aimer-illuminator-video/ (Year: 2019).

Fenix AER-02 V2.0 tactical remote switch, dated Aug. 2, 2016, [online], [site visited Jun. 26, 2020]. Available from Internet, URL: https://www.knivesandtools.com/en/pt/fenix-aer-02-remote-tailcap.htm (Year: 2016).

Unity Tactical Hot Botton, dated May 11, 2019 [online], [site visited Jun. 26, 2020]. Available from Internet, URL: https://www.unitytactical.com/product-category/hot-button/ (Year: 2019).

* cited by examiner

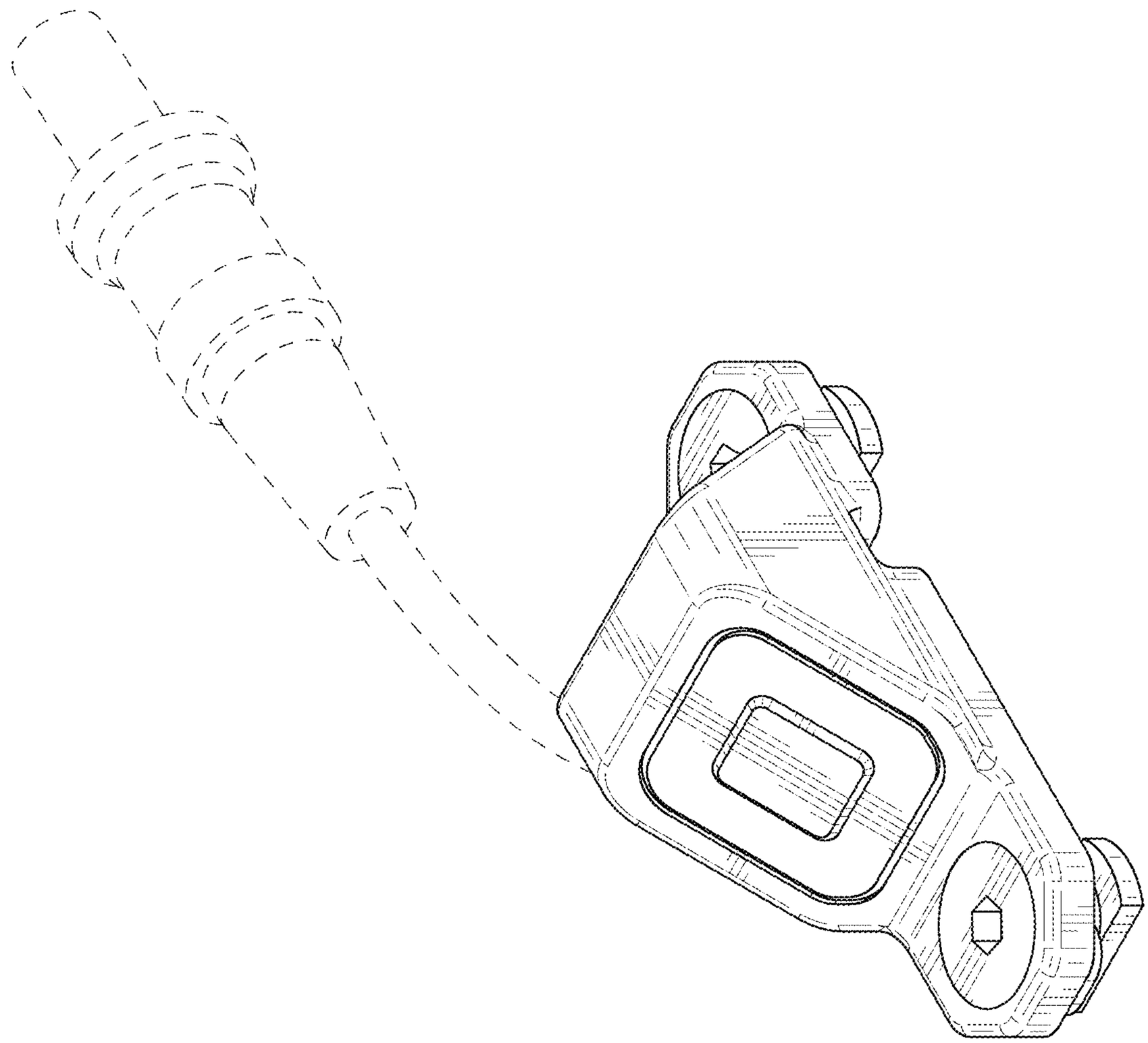

FIG. 1

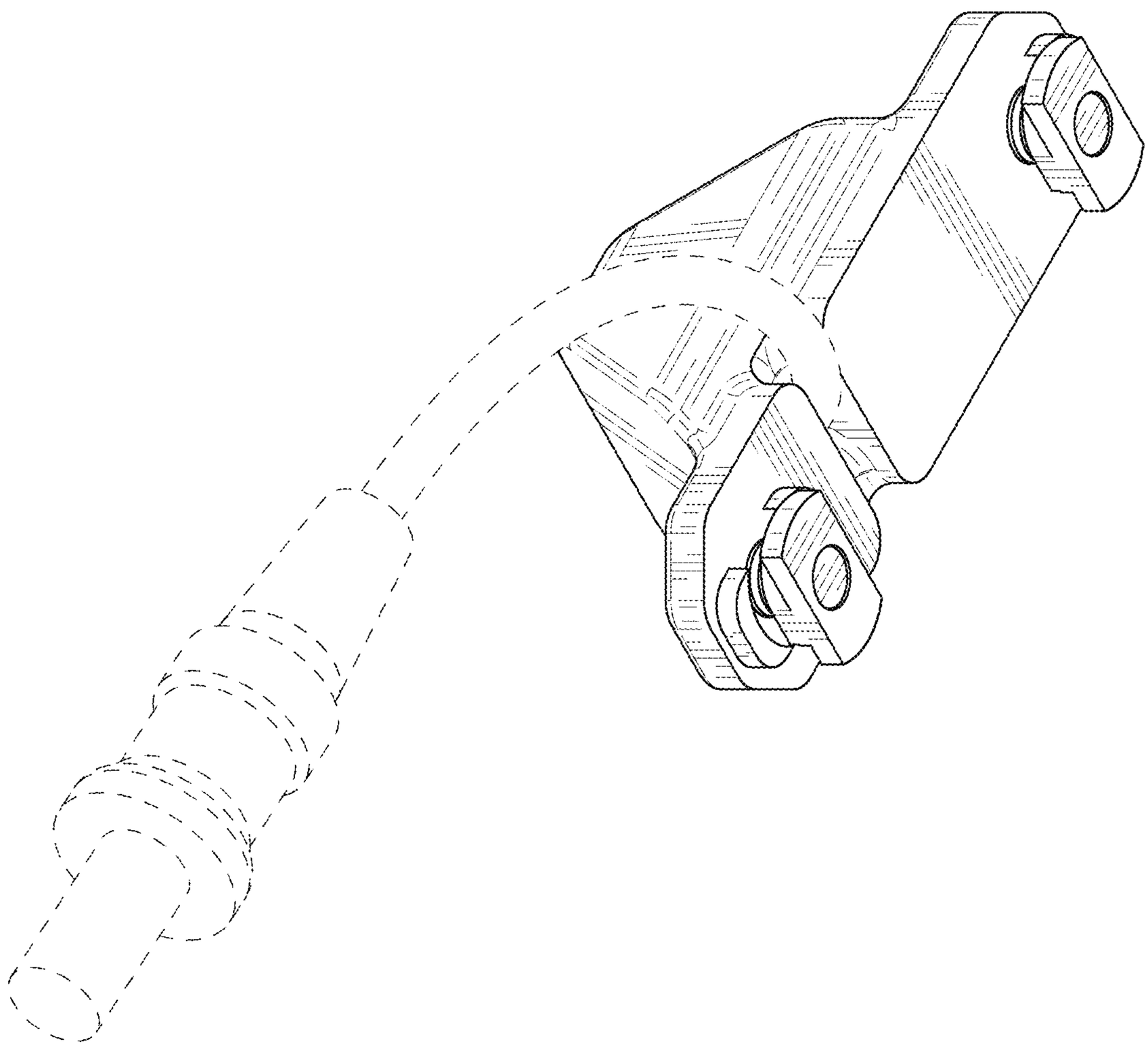

FIG. 2

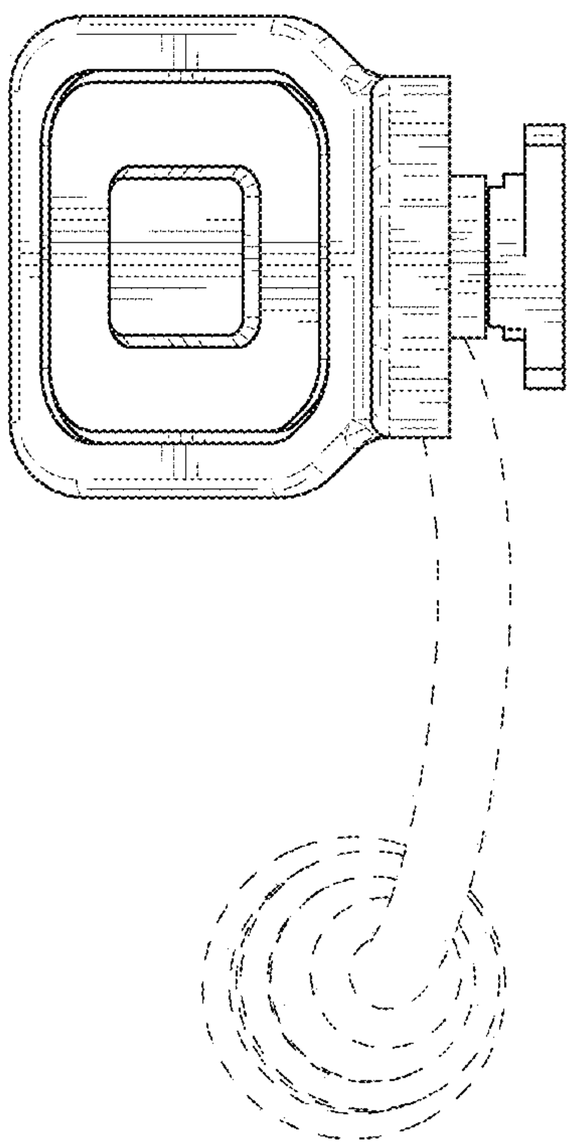

FIG. 3

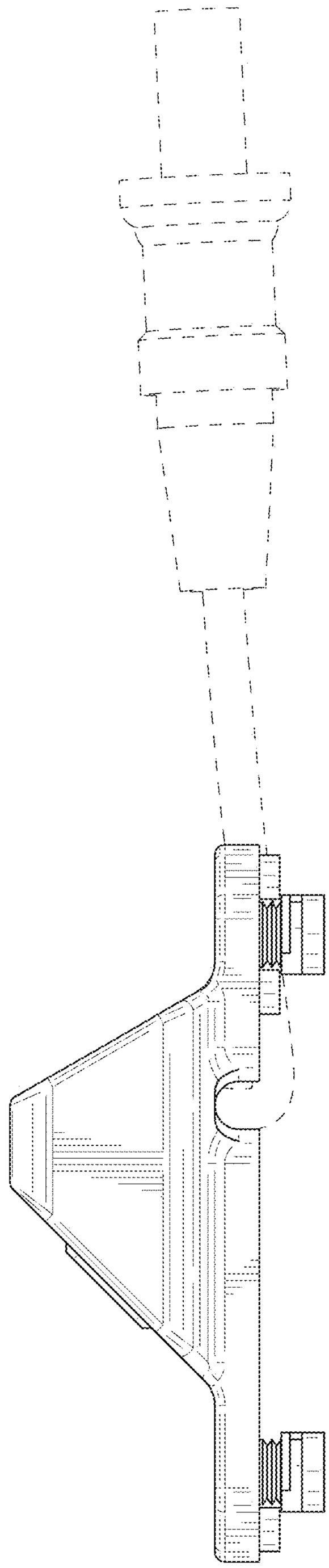

FIG. 4

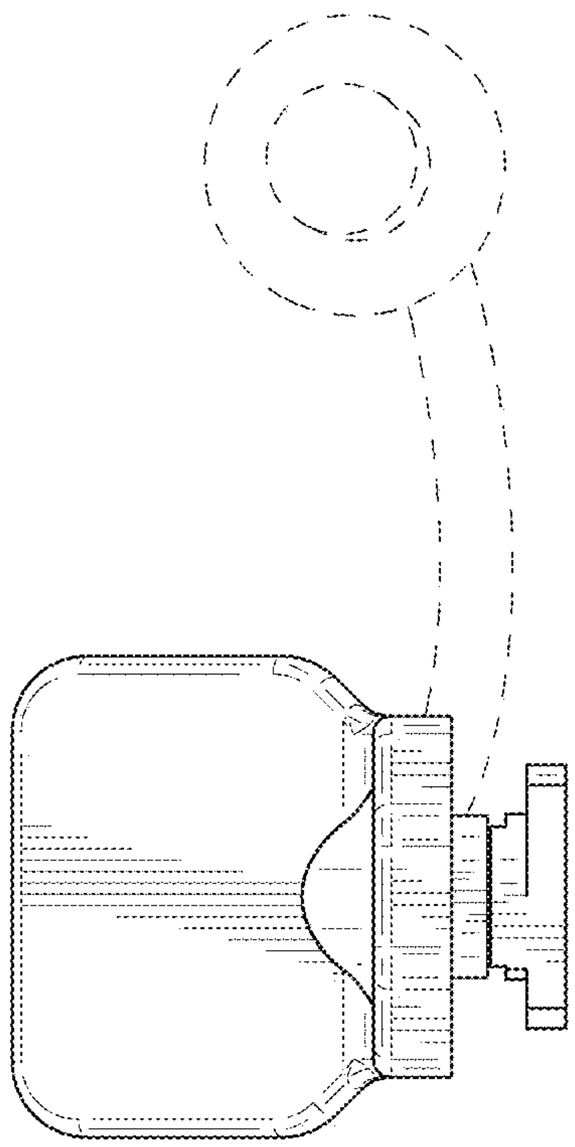

FIG. 5

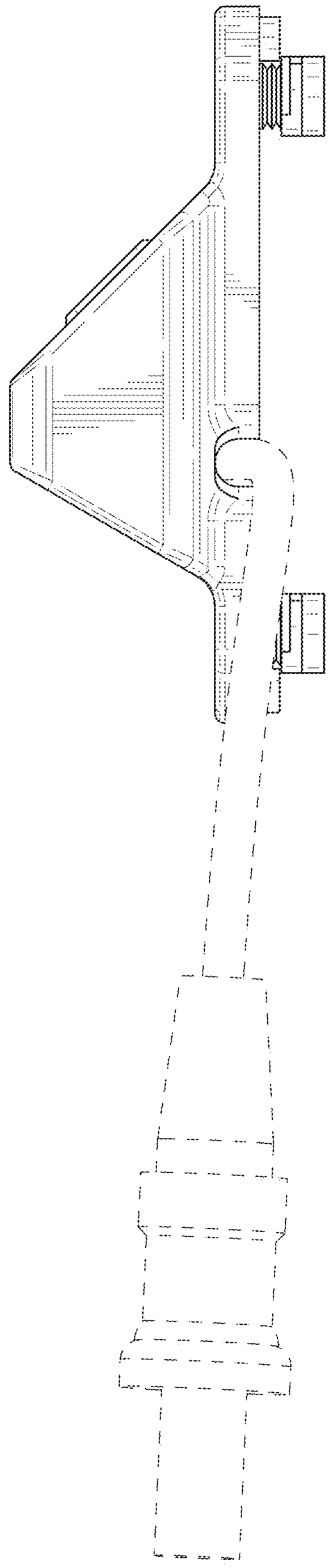

FIG. 6

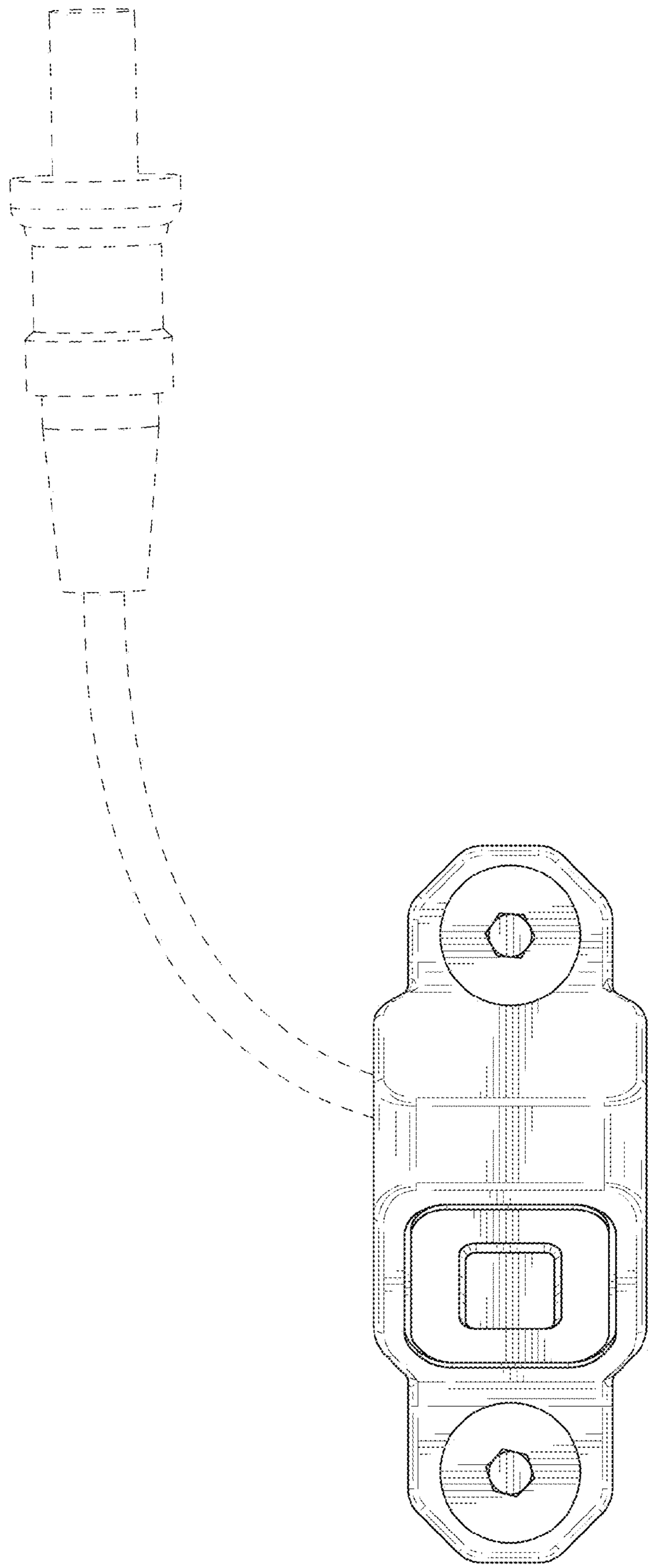

FIG. 7

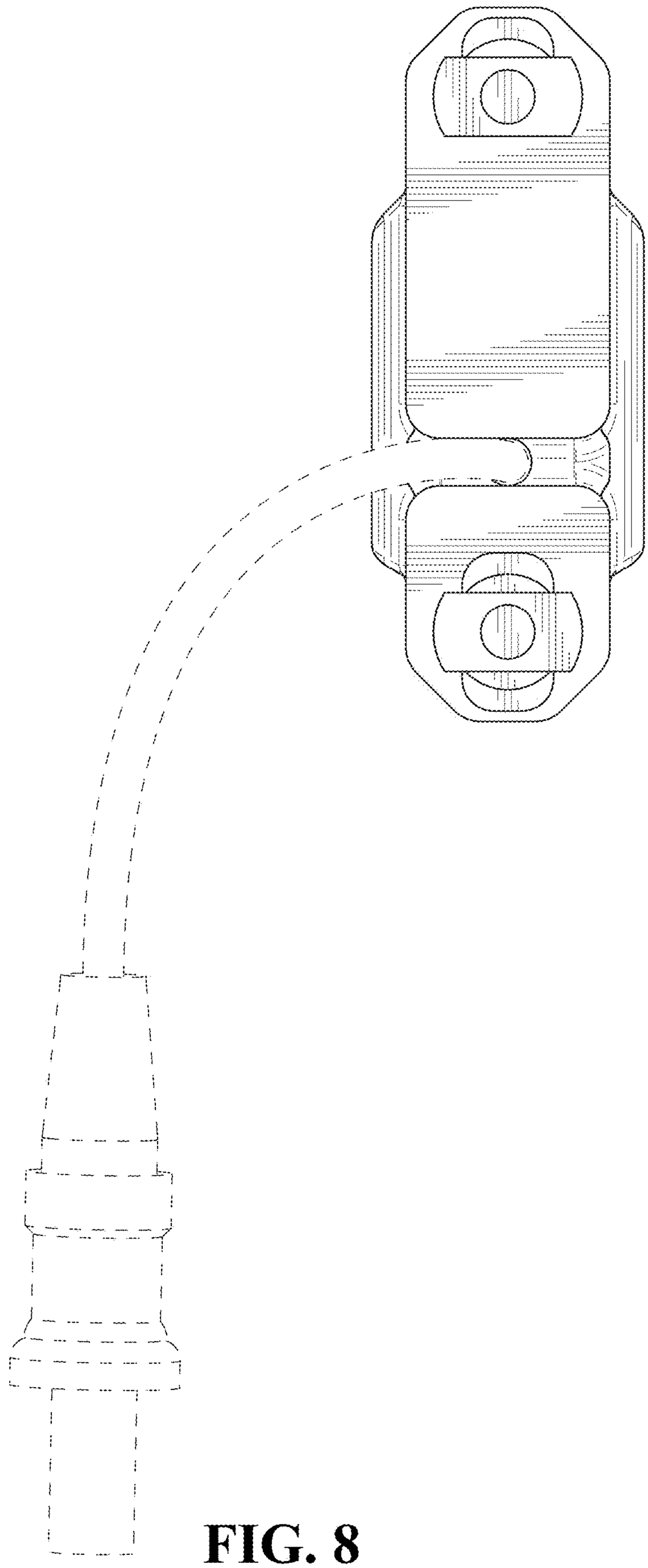

FIG. 8