US00D904927S

(12) United States Design Patent
Yaari

(10) Patent No.: US D904,927 S
(45) Date of Patent: ** Dec. 15, 2020

(54) **PLANT GROWING UNIT**

(71) Applicant: **Barak Yaari**, Miami, FL (US)

(72) Inventor: **Barak Yaari**, Miami, FL (US)

(**) Term: **15 Years**

(21) Appl. No.: **29/695,830**

(22) Filed: **Jun. 21, 2019**

(51) **LOC (12) Cl.** **11-02**

(52) **U.S. Cl.**
USPC **D11/155**

(58) **Field of Classification Search**
USPC D11/143–156, 164; D3/304; D6/403, D6/404, 405, 691.6, 691.9, 709.2, 709.22, D6/711, 711.1; D7/550.1; D26/55
CPC ... A47G 7/00; A47G 7/02; A47G 7/04; A47G 7/06; A47G 7/08; A01G 9/02; A01G 9/021; A01G 9/029; A01G 9/0293; A01G 9/047; A01G 9/24; A01G 5/04
See application file for complete search history.

(56) **References Cited**

U.S. PATENT DOCUMENTS

2,634,046 A * 4/1953 Weber B65D 5/4266 229/182
2,896,374 A * 7/1959 Perin ..... H01H 51/32 47/62 R
3,066,445 A * 12/1962 D Amico A47G 7/041 47/20.1
3,521,579 A * 7/1970 Stafford A47B 13/06 108/64
3,752,386 A * 8/1973 Froehlig B65D 5/28 229/190
D228,606 S * 10/1973 Blount D7/552.2
3,772,827 A * 11/1973 Ware A01G 9/022 47/39
D237,898 S * 12/1975 Austin et al. D11/144
3,990,663 A * 11/1976 Hendrickson A47B 3/06 248/188.7
D244,838 S * 6/1977 LeBreux D11/144
D245,407 S * 8/1977 Ware D11/144
4,048,753 A * 9/1977 Roberts, Jr. ..... A01G 31/02 47/59 R
D281,555 S * 12/1985 Levy D6/406.6
4,814,752 A * 3/1989 Lehman D06F 39/081 200/61.04
5,337,916 A * 8/1994 Voss B65D 5/4266 229/182
D350,862 S * 9/1994 Beller D6/691.1
5,427,309 A * 6/1995 Voss B65D 5/4266 229/182
D359,930 S * 7/1995 Tuttle D11/155
D379,716 S * 6/1997 Zipperle D3/304
(Continued)

Primary Examiner — Elizabeth A. Albert

(57) **CLAIM**

The ornamental design for a plant growing unit, as shown and described.

DESCRIPTION

FIG. **1** is a top perspective view of a plant growing unit showing my new design;
FIG. **2** is a bottom perspective view thereof;
FIG. **3** is a front elevational view thereof;
FIG. **4** is a rear elevational view thereof;
FIG. **5** is a left-side elevational view thereof;
FIG. **6** is a right-side elevational view thereof;
FIG. **7** is a top plan view thereof;
FIG. **8** is a bottom plan view thereof;
FIG. **9** a top perspective view thereof in an extended configuration; and,
FIG. **10** a bottom perspective view thereof in the extended configuration.
The broken lines showing the water tank, timer and handle in FIGS. **1-10** are included for the purpose of illustrating environmental structure and form no part of the claimed design.

1 Claim, 10 Drawing Sheets

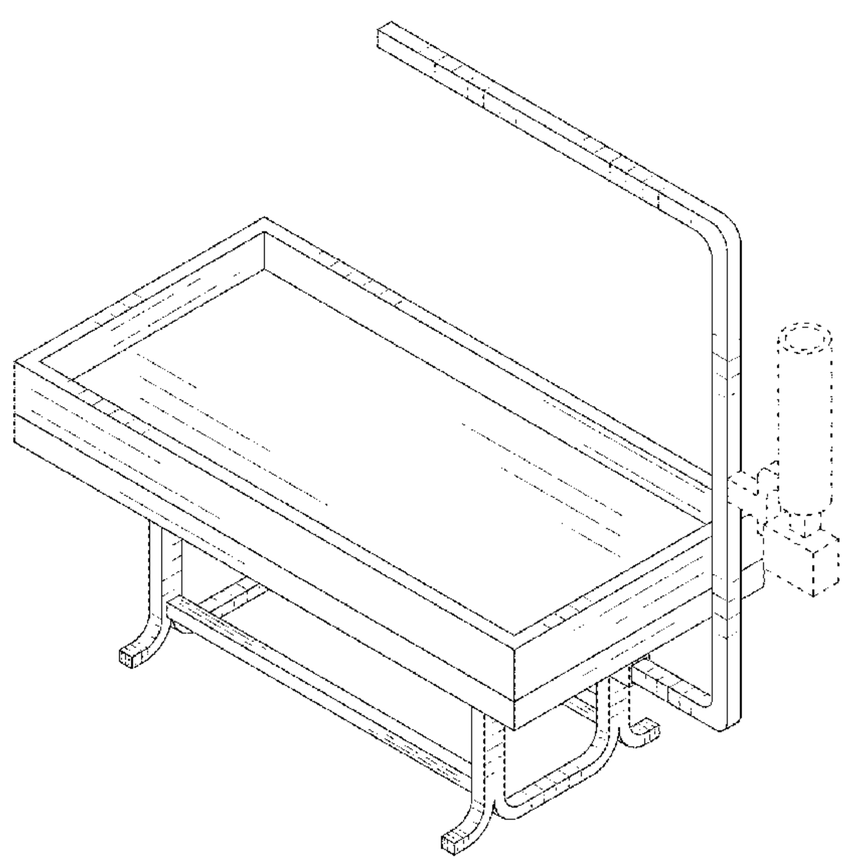

(56) **References Cited**

U.S. PATENT DOCUMENTS

D416,102	S	*	11/1999	Schulman	D11/144
D419,332	S	*	1/2000	Collins	D6/691.5
7,654,036	B2	*	2/2010	Shouse	A01G 31/06 47/39
8,042,700	B1	*	10/2011	Smalley	A47F 5/0807 211/88.01
8,416,089	B1	*	4/2013	Clary	G01M 3/045 340/602
D729,115	S	*	5/2015	Prinster	D11/144
9,192,107	B2	*	11/2015	Adams	A01G 9/02
D745,430	S	*	12/2015	McLennan	D11/155
D760,118	S	*	6/2016	Lepp	D11/142
D767,340	S	*	9/2016	Lau	D7/554.3
D767,638	S	*	9/2016	Kuge	D11/144
D771,520	S	*	11/2016	Bryan, III	D11/155
D779,862	S	*	2/2017	Everson	D6/691.1
D792,808	S	*	7/2017	Verneuil	D11/144
2019/0037779	A1	*	2/2019	Chirco	A01G 9/12
2020/0053969	A1	*	2/2020	Gehin	A01G 24/44
2020/0068809	A1	*	3/2020	Ko	A01G 9/249

* cited by examiner

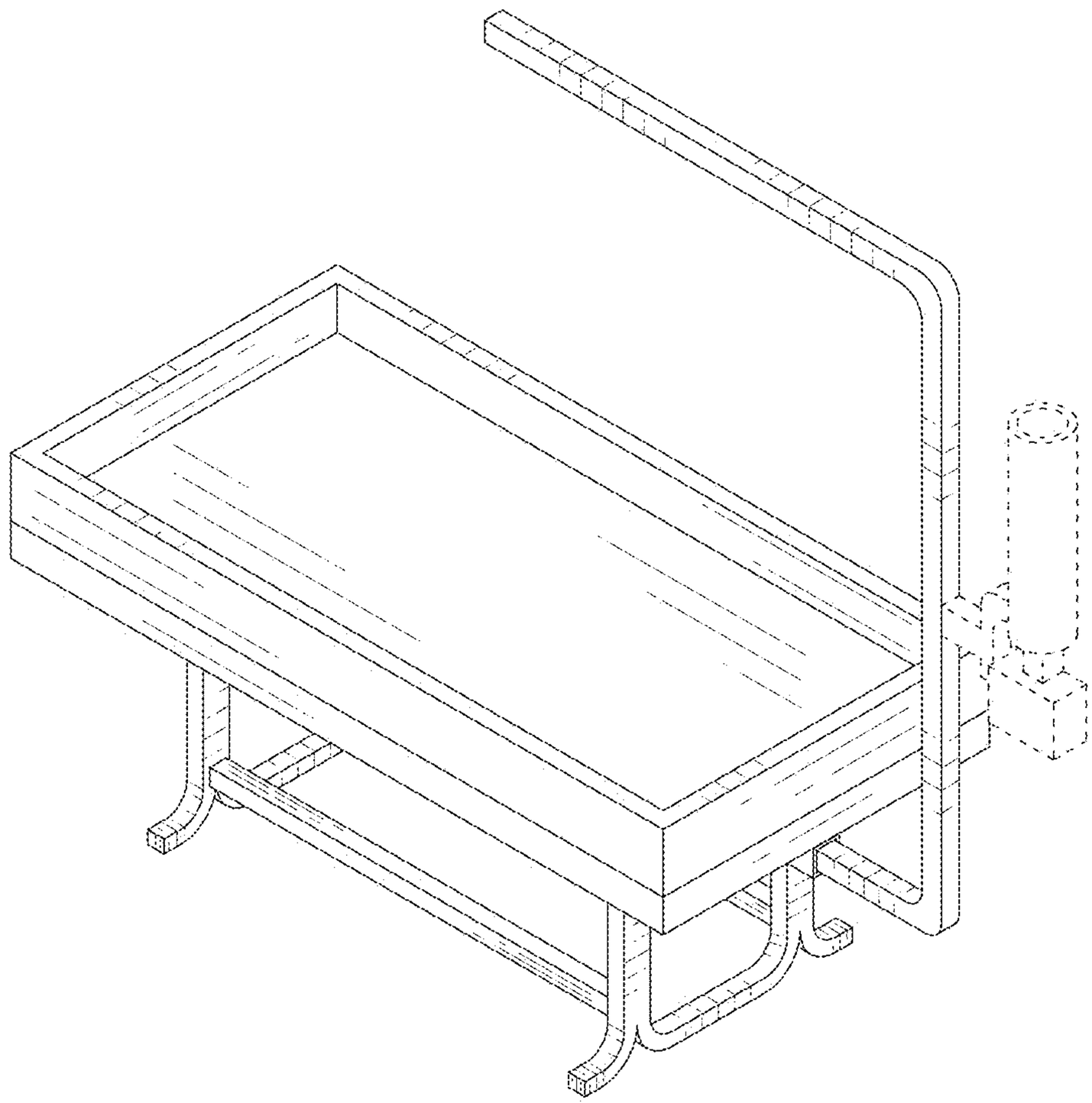

FIG. 1

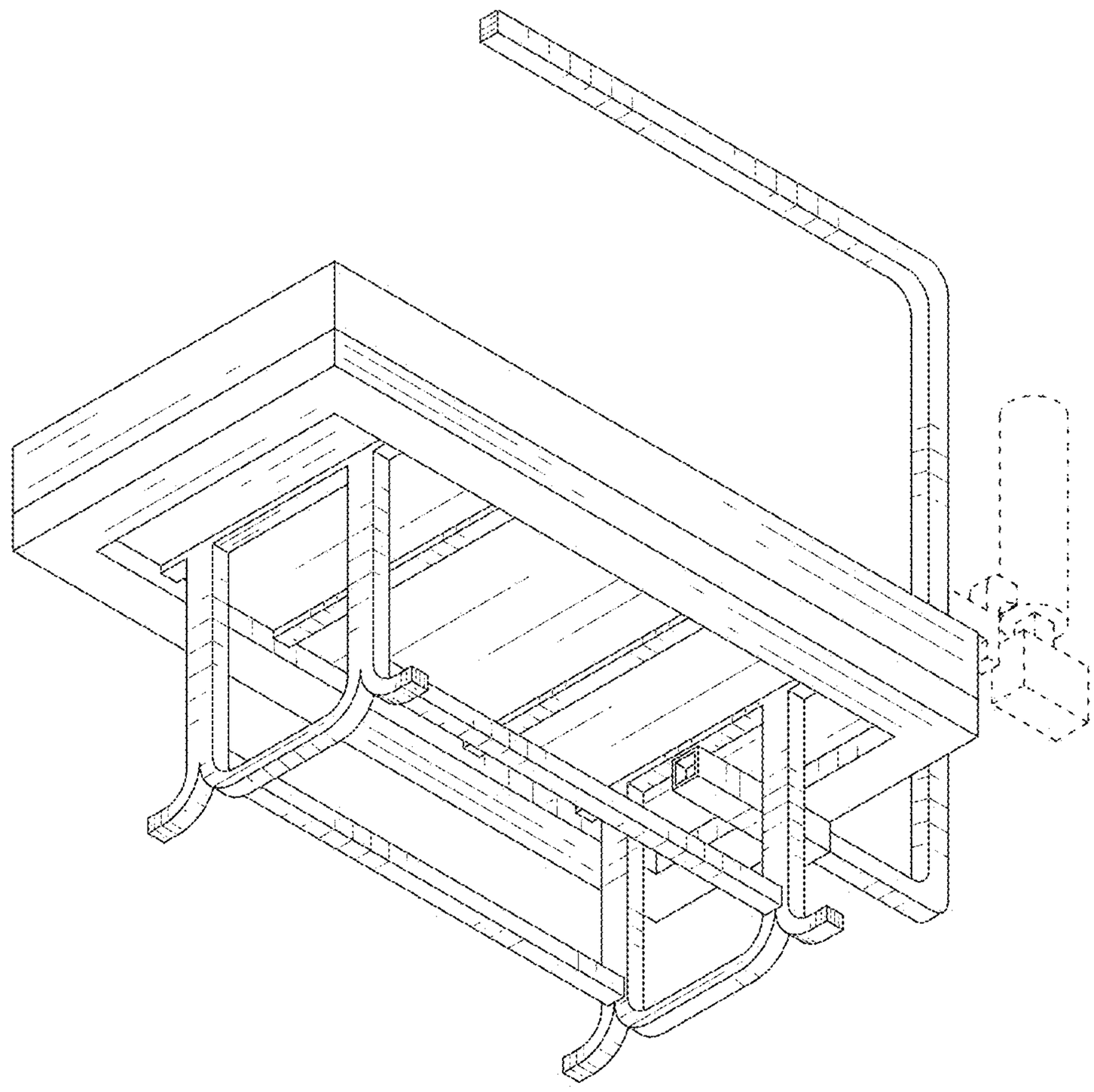

FIG. 2

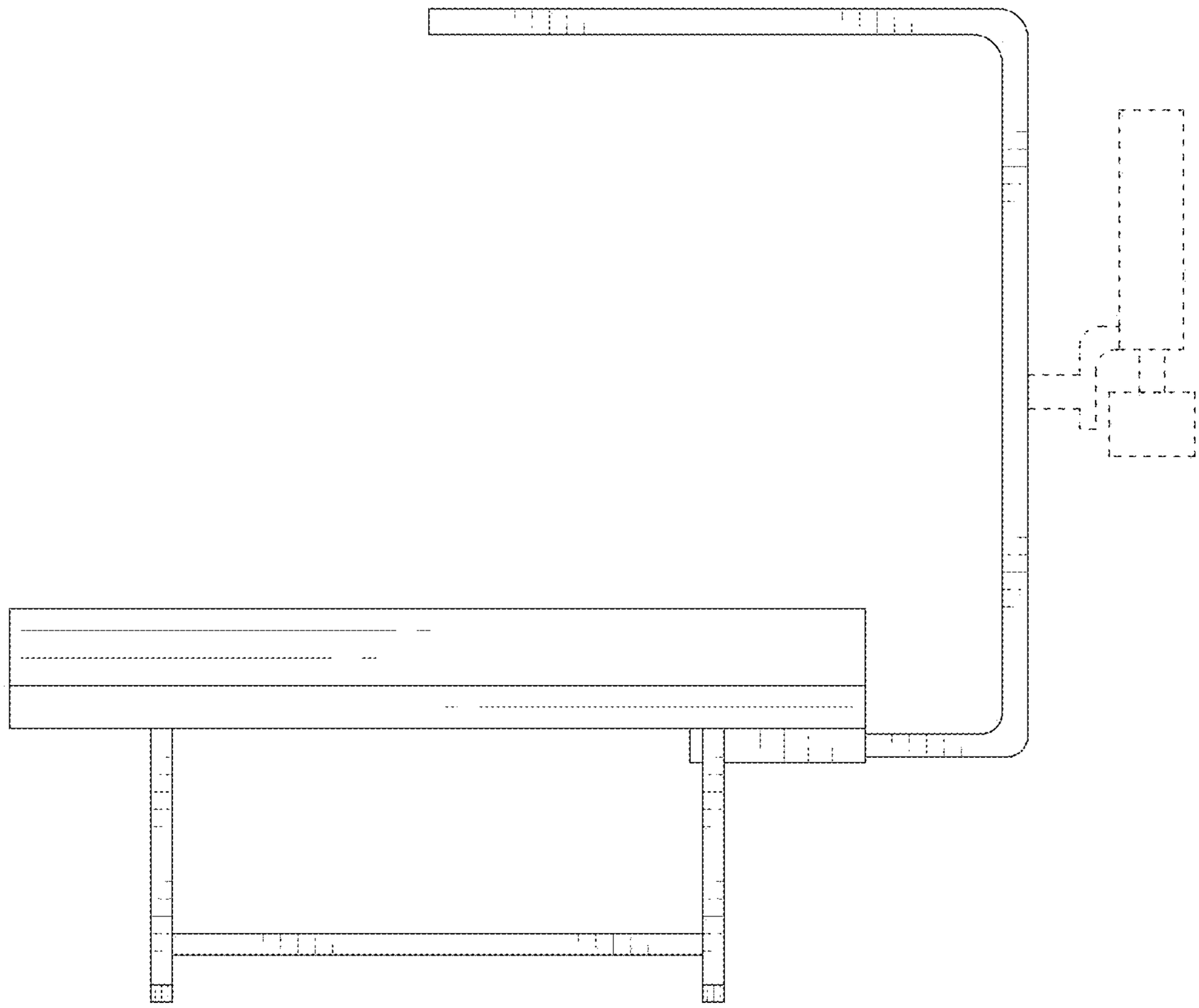

FIG. 3

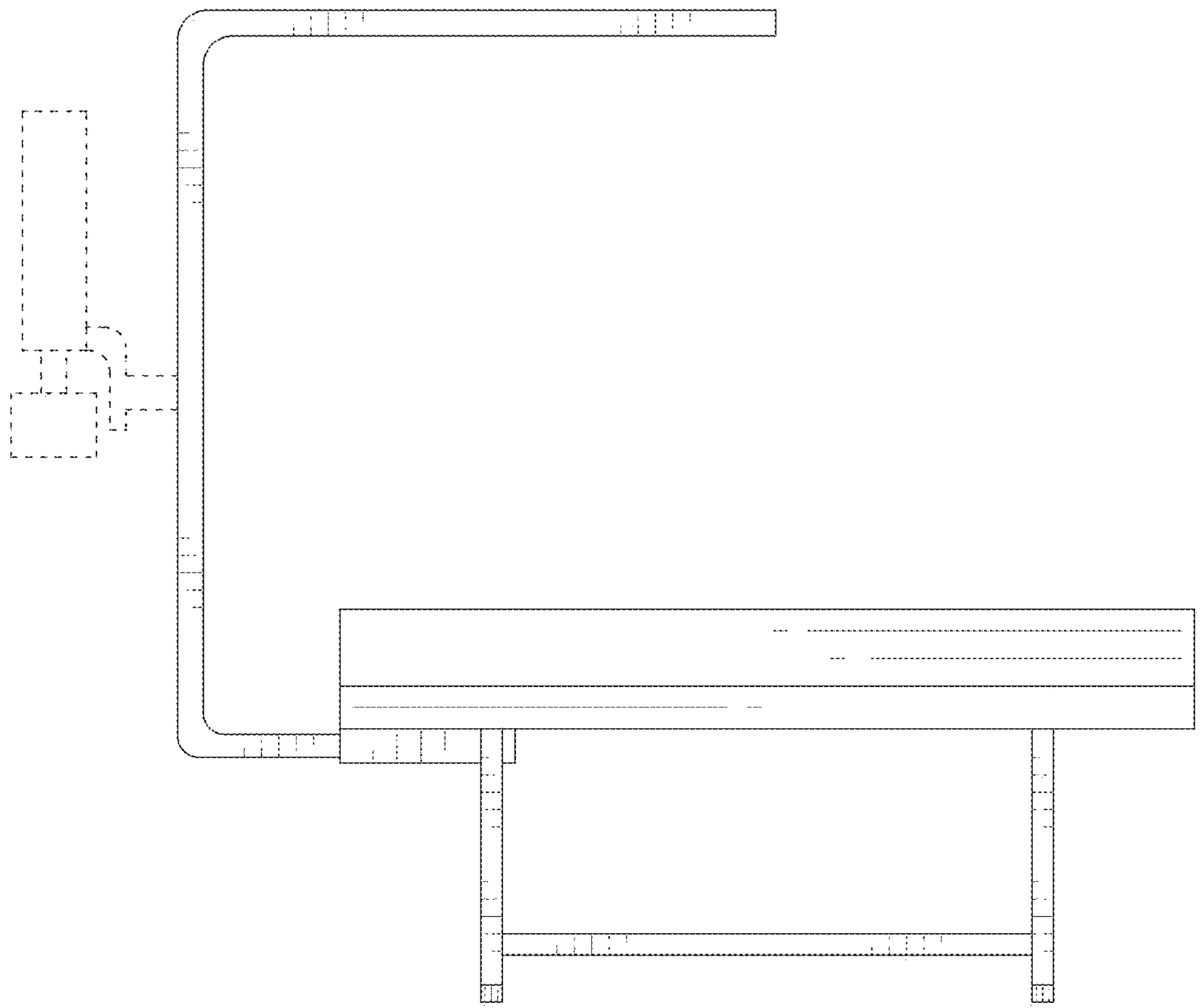

FIG. 4

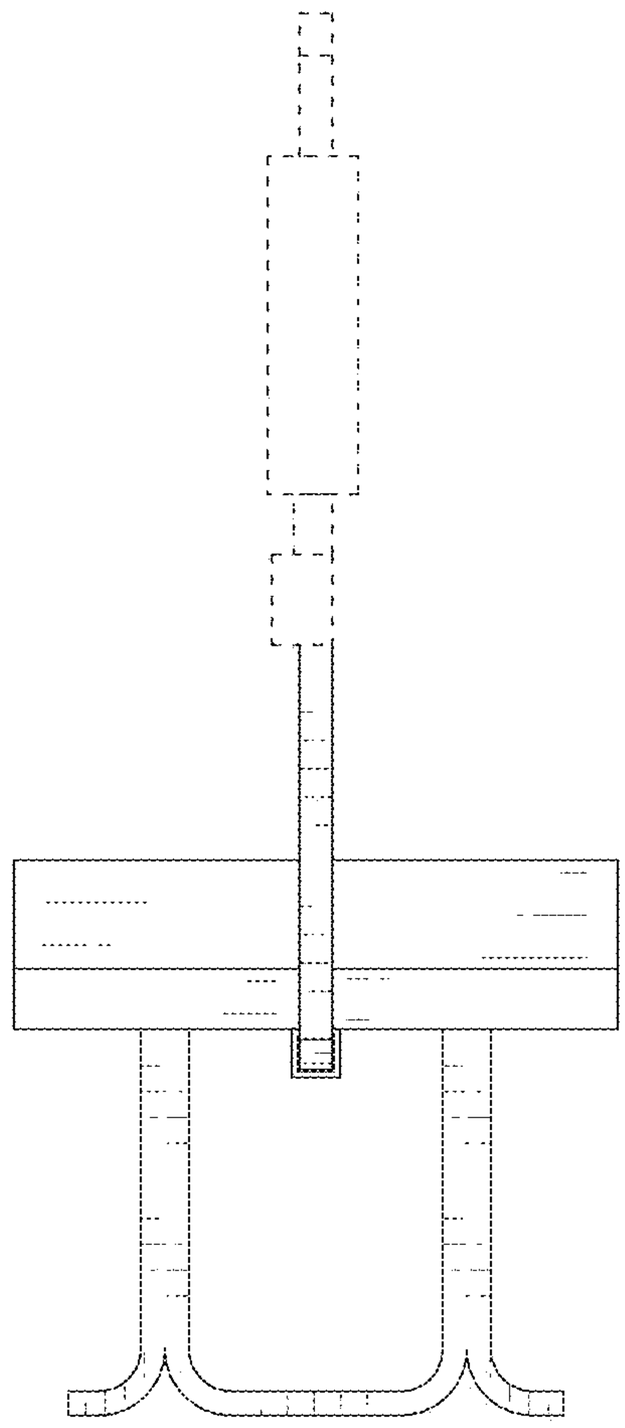

FIG. 5

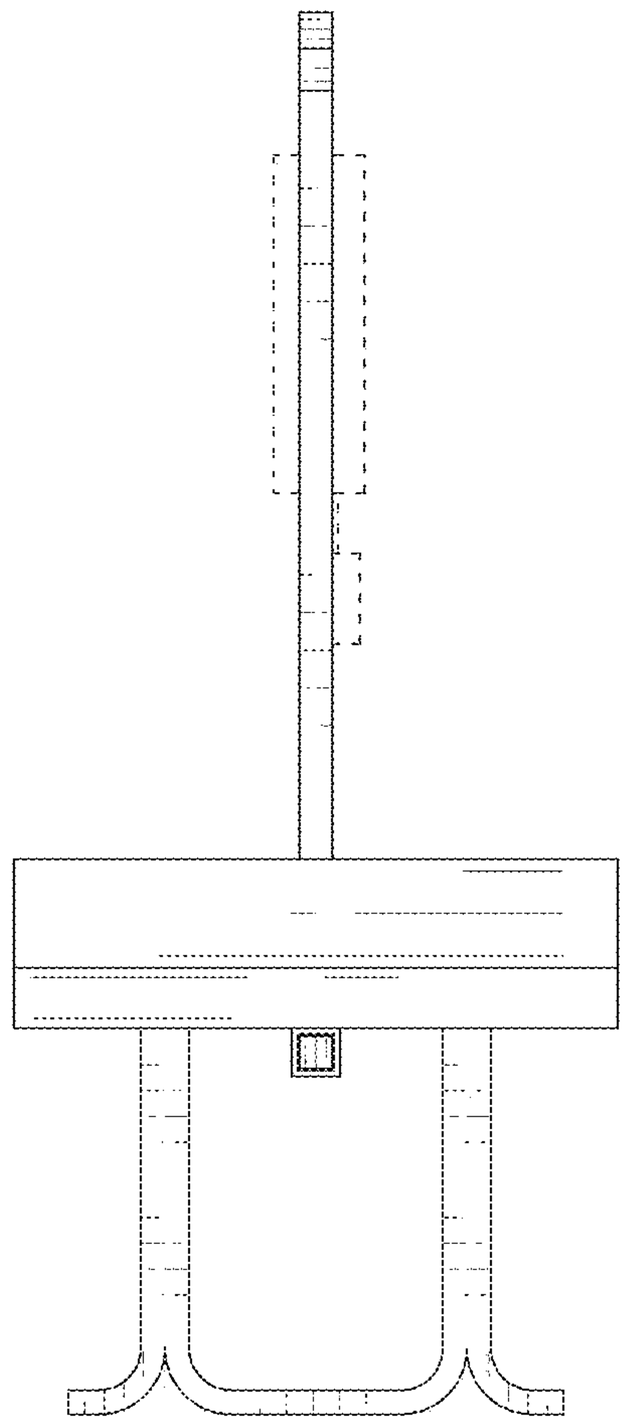

FIG. 6

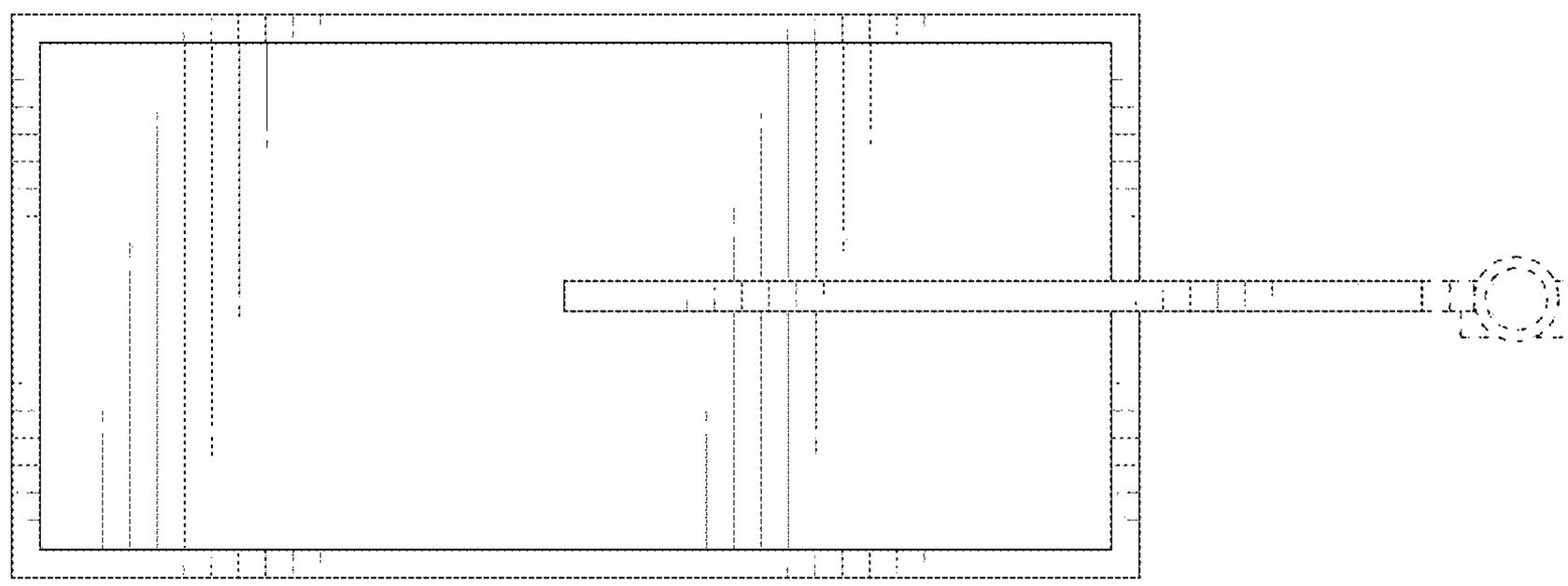

FIG. 7

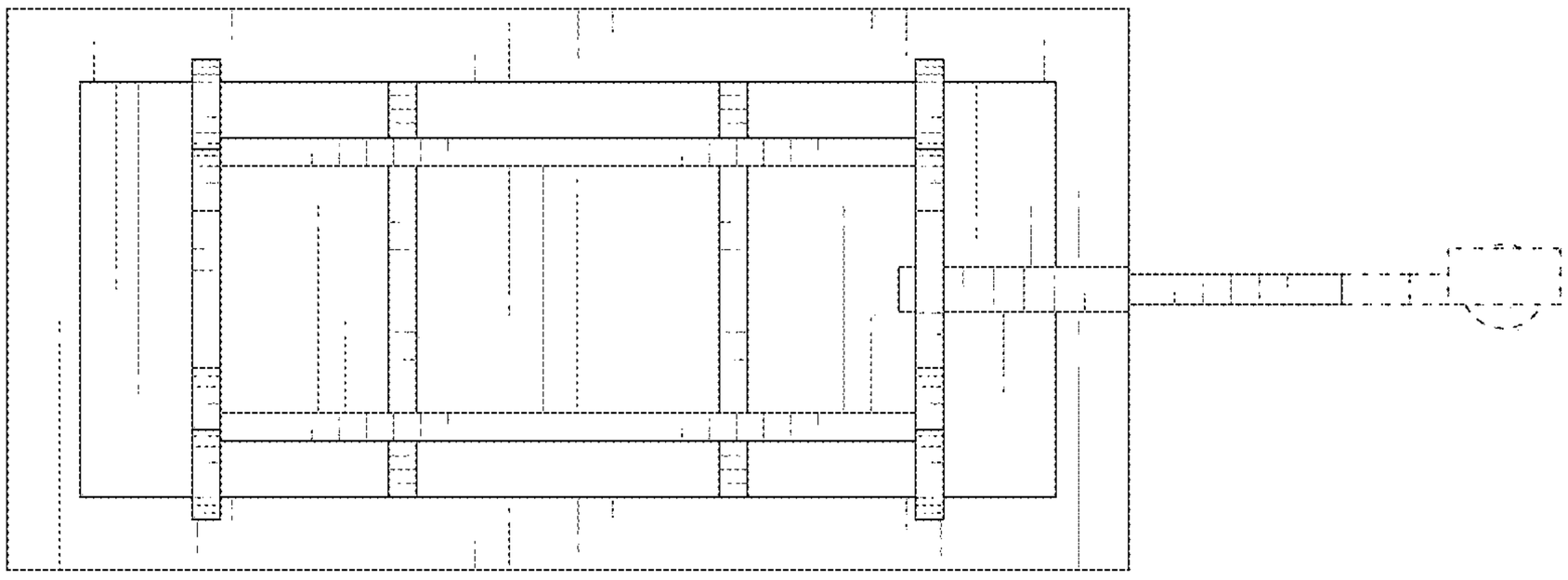

FIG. 8

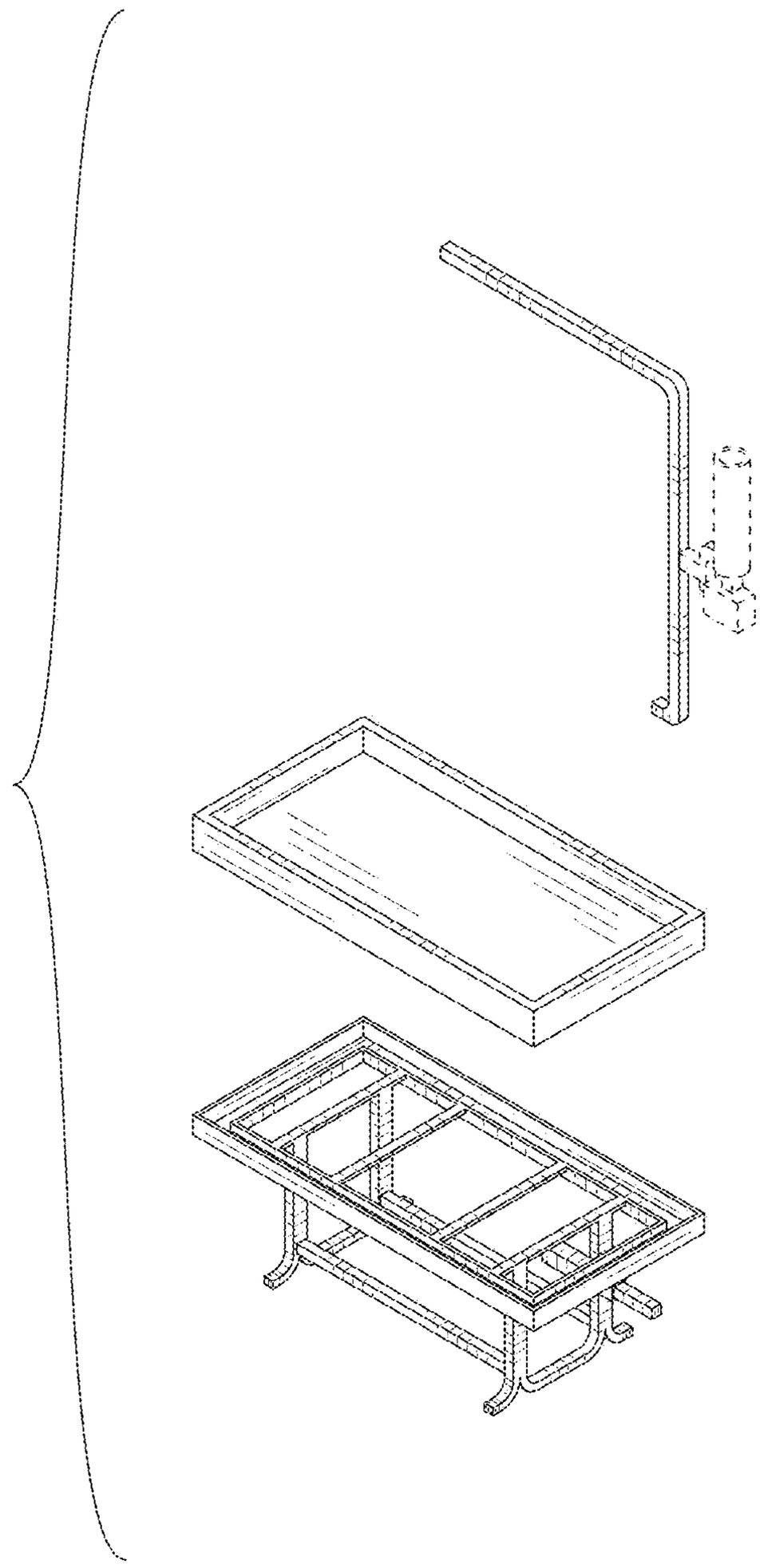

FIG. 9

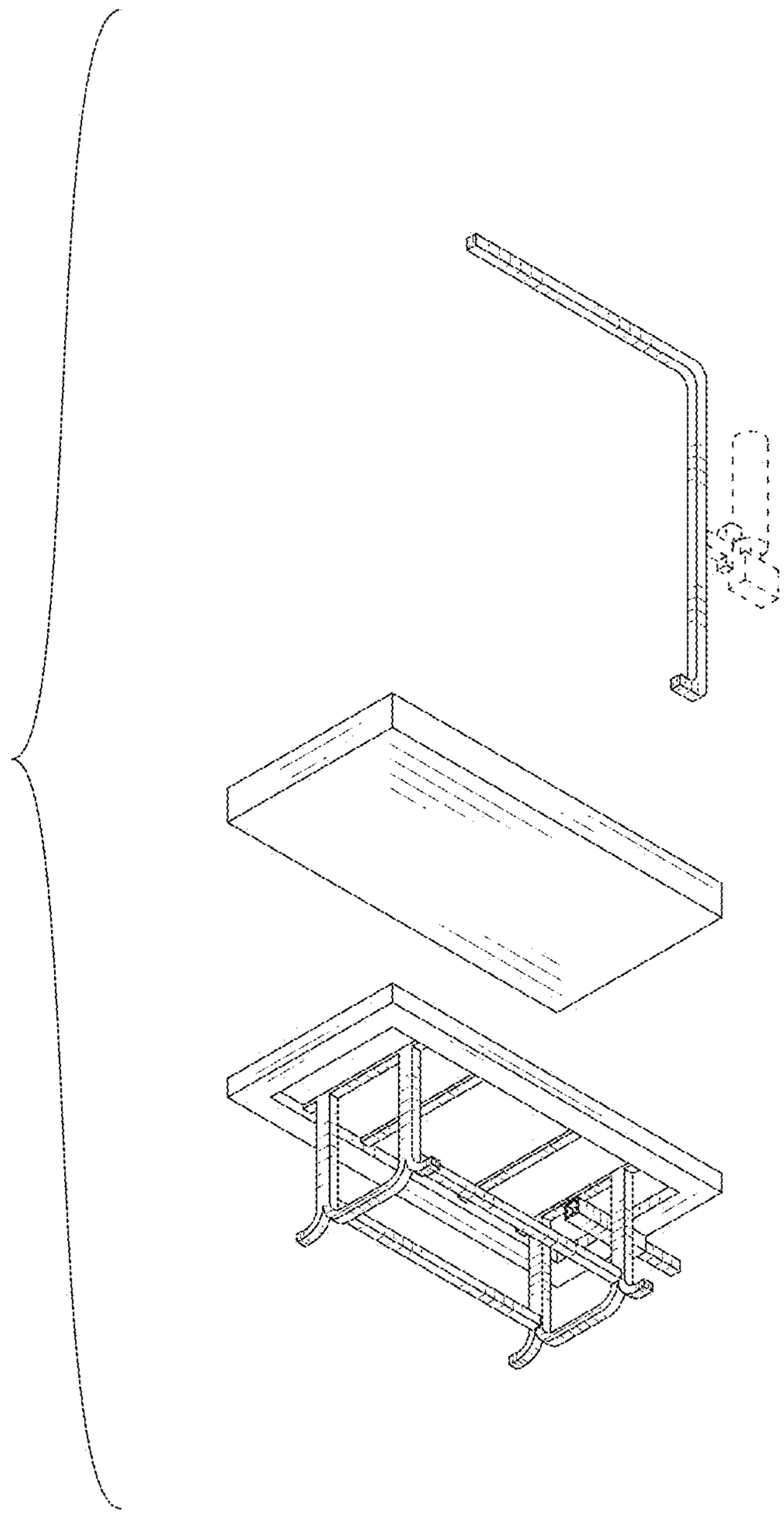

FIG. 10