US00D904662S

(12) United States Design Patent

Bao

(10) Patent No.: US D904,662 S
(45) Date of Patent: ** Dec. 8, 2020

(54) **WORK LIGHT**

(71) Applicant: **YUYAO YUCHANG ELECTRICAL APPLIANCE CO., LTD.**, Zhejiang (CN)

(72) Inventor: **Yong Bao**, Yuyao (CN)

(73) Assignee: **YUYAO YUCHANG ELECTRICAL APPLIANCE CO., LTD.**, Zhejiang (CN)

(**) Term: **15 Years**

(21) Appl. No.: **29/687,002**

(22) Filed: **Apr. 9, 2019**

(51) **LOC (12) Cl.** **26-03**

(52) **U.S. Cl.**
USPC **D26/63**

(58) **Field of Classification Search**
USPC D26/1, 24, 61, 63, 65, 85, 92
CPC F21V 21/14; F21V 15/01; F21V 14/02; F21V 21/30; F21V 21/00; F21V 14/00; F21S 8/00; F21S 8/003; F21S 8/043; F21Y 2105/001
See application file for complete search history.

(56) **References Cited**

U.S. PATENT DOCUMENTS

D403,094 S * 12/1998 Grossman D26/63
D505,220 S * 5/2005 Stekelenburg D26/61
D844,208 S * 3/2019 You D26/63
D856,565 S * 8/2019 Fang D26/63
D861,945 S * 10/2019 Fang D26/63
D863,641 S * 10/2019 Miyawaki D26/63

* cited by examiner

Primary Examiner — Brain N. Vinson
(74) *Attorney, Agent, or Firm* — Raymond Y. Chan; David and Raymond Patent Firm

(57) **CLAIM**

The ornamental design for a work light, as shown and described.

DESCRIPTION

FIG. **1** is a perspective view of the work light of my new design;
FIG. **2** is a front view thereof;
FIG. **3** is a rear view thereof;
FIG. **4** is a left view thereof;
FIG. **5** is a right view thereof;
FIG. **6** is a top view thereof;
FIG. **7** is a bottom view thereof;
FIG. **8** is a perspective view thereof, illustrating the work light being rotatably moved to adjust a tilted angle thereof; and,
FIG. **9** is a perspective view thereof, illustrating two light heads being rotatably moved sideward.
The broken line disclosure represents portions of the work light which form no part of the claimed design.

1 Claim, 9 Drawing Sheets

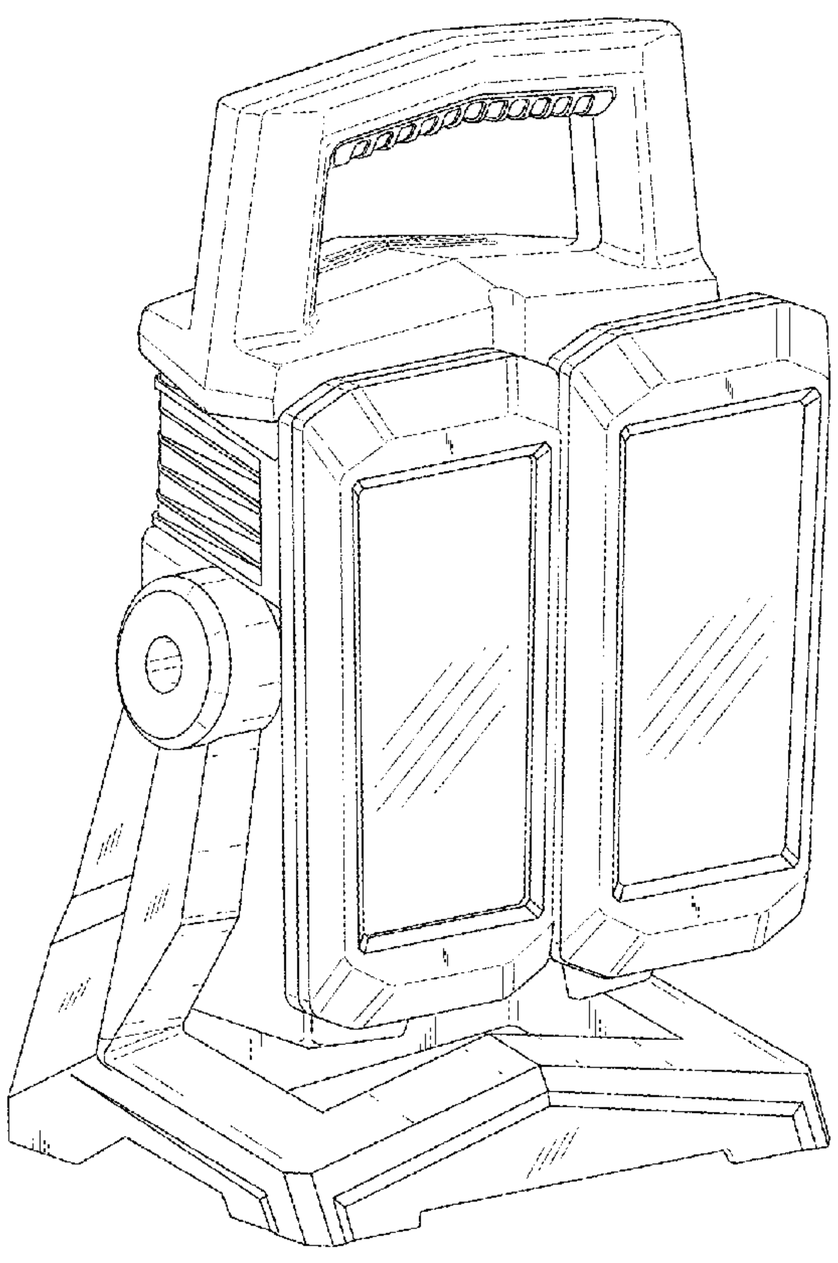

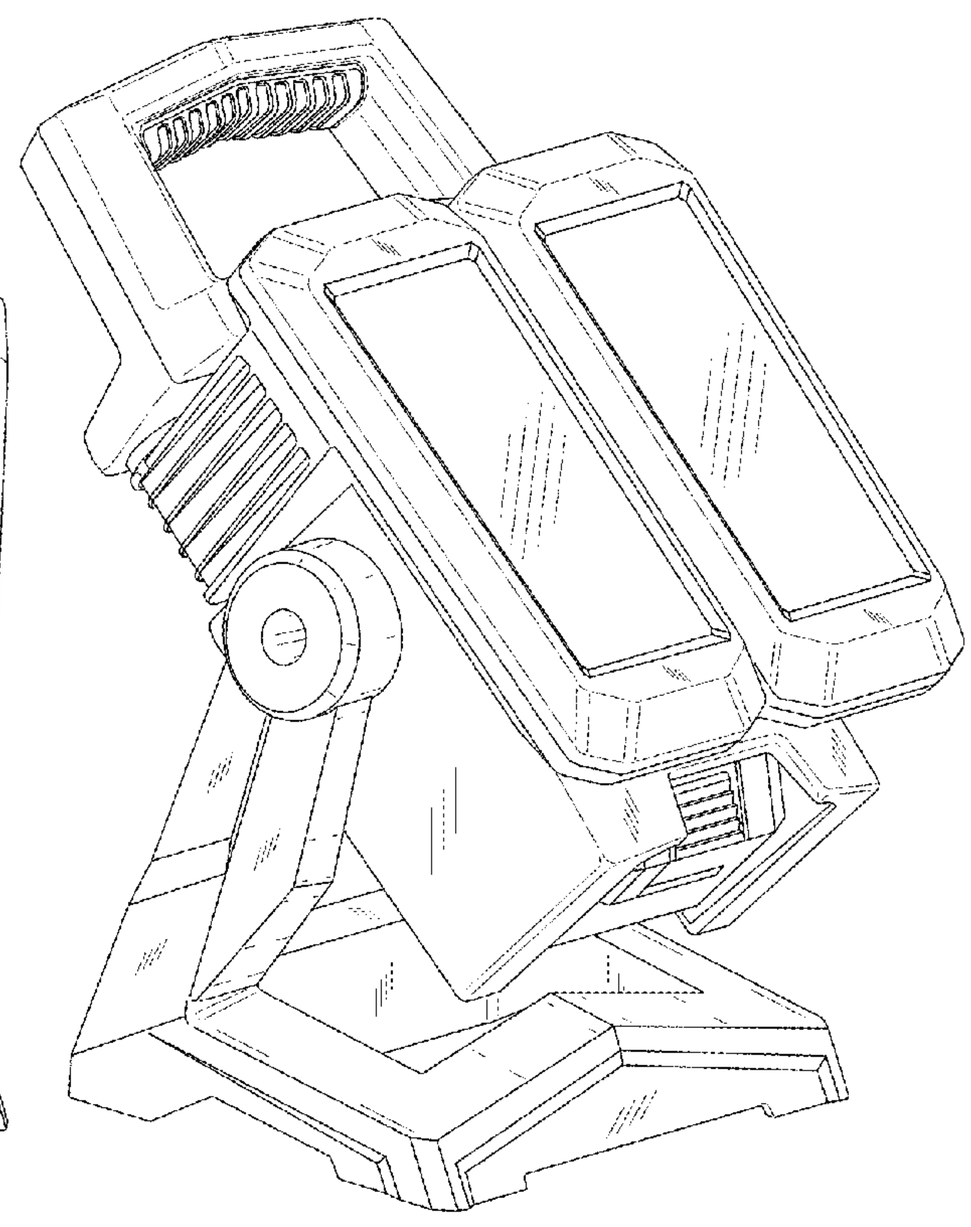

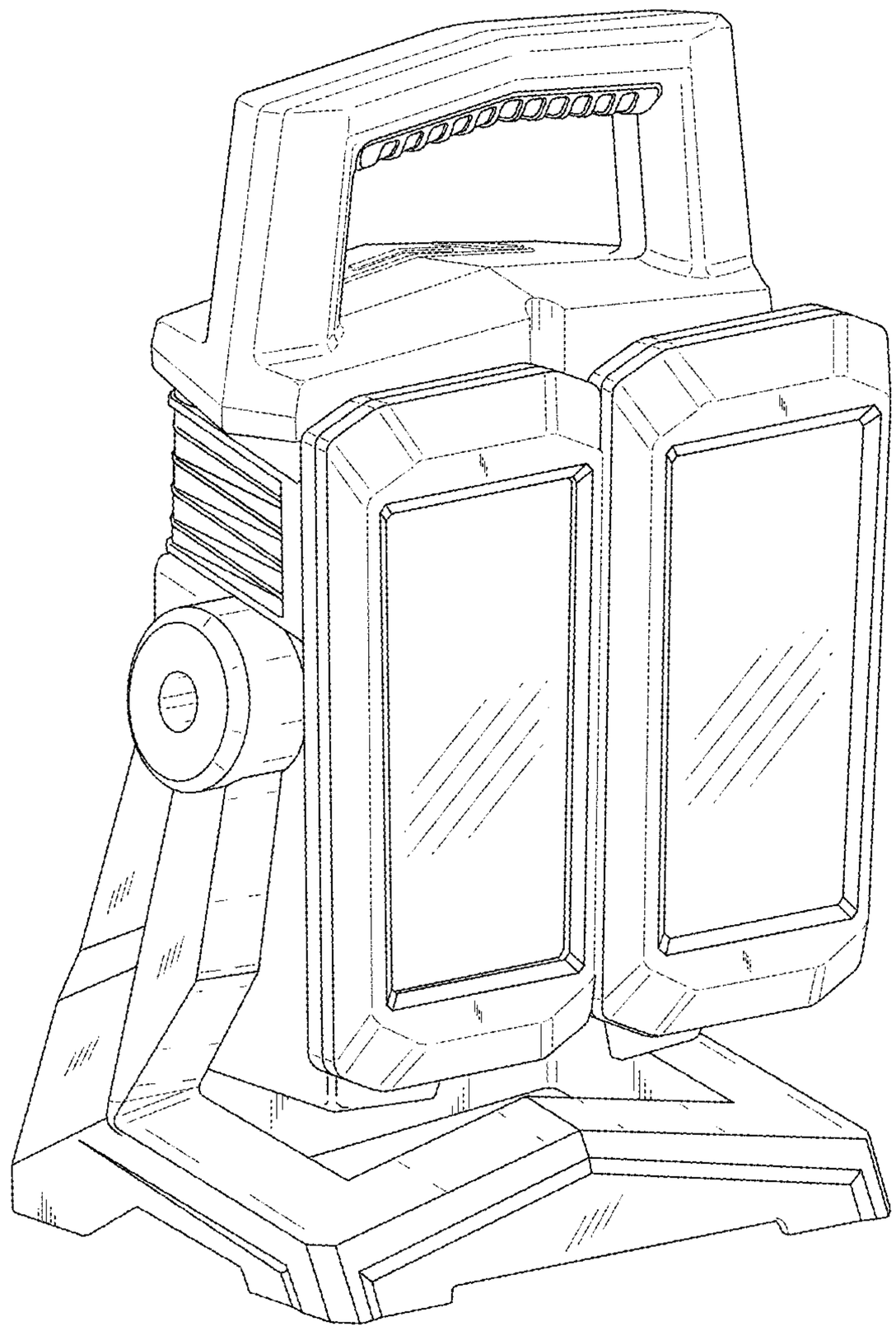

FIG.1

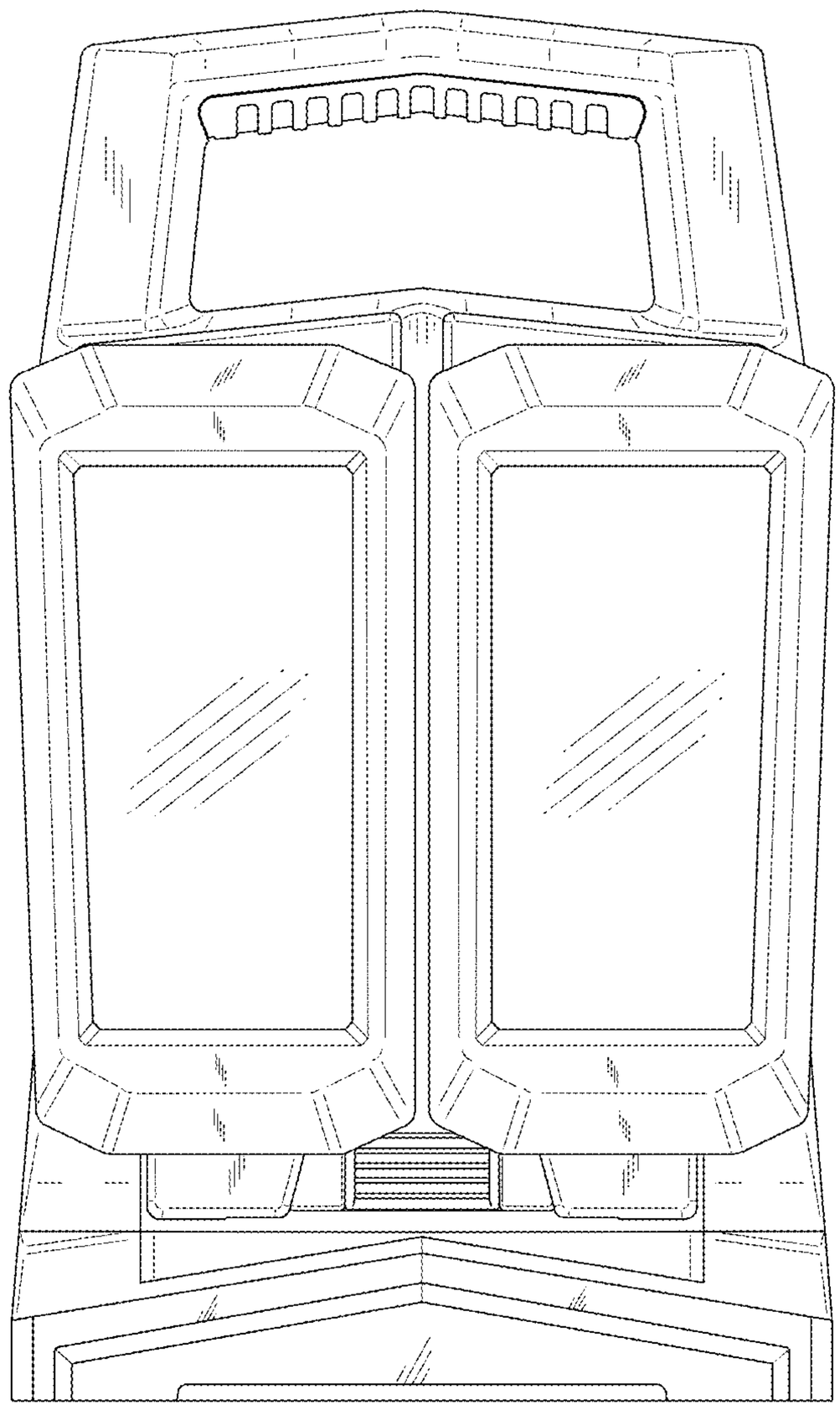

FIG.2

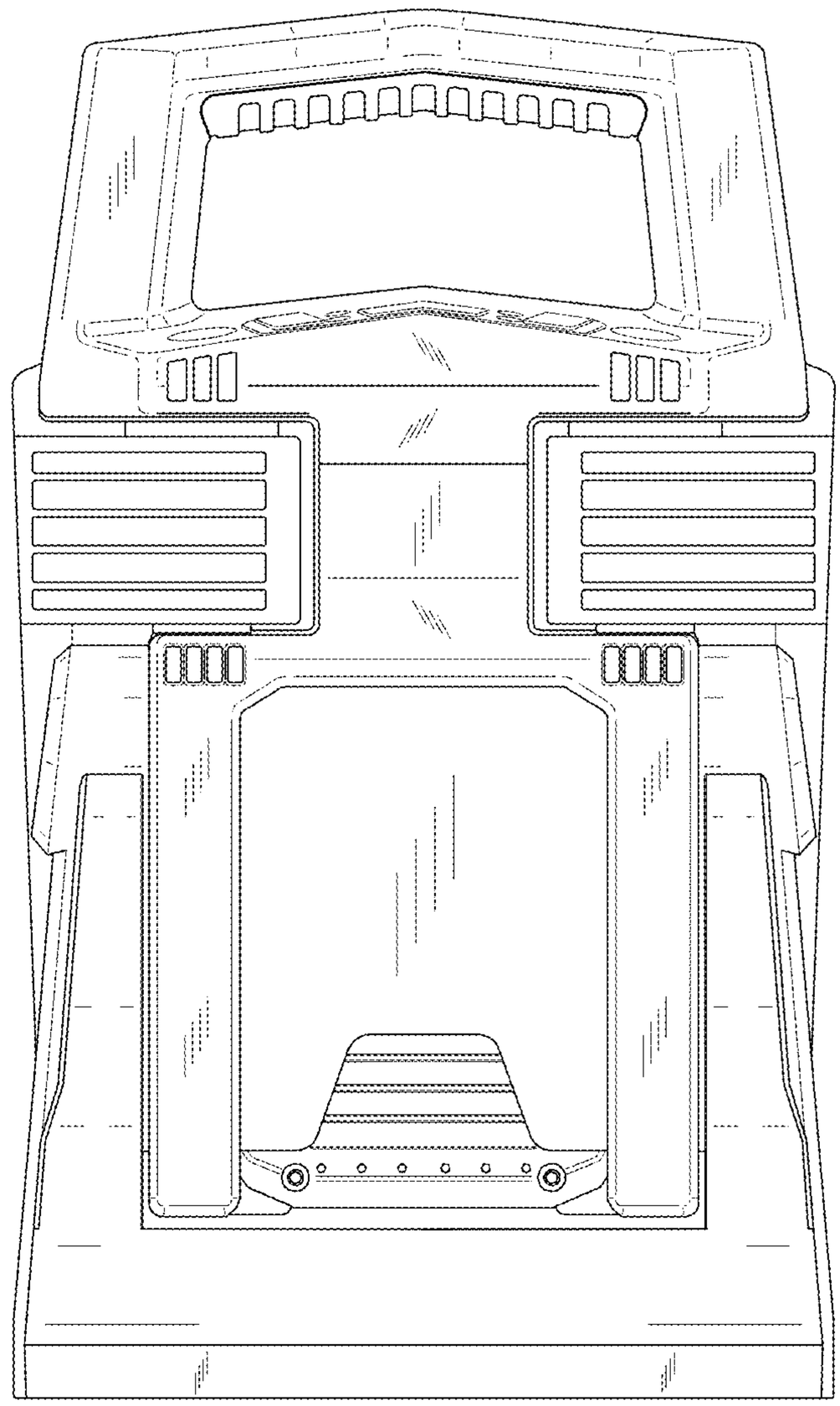

FIG.3

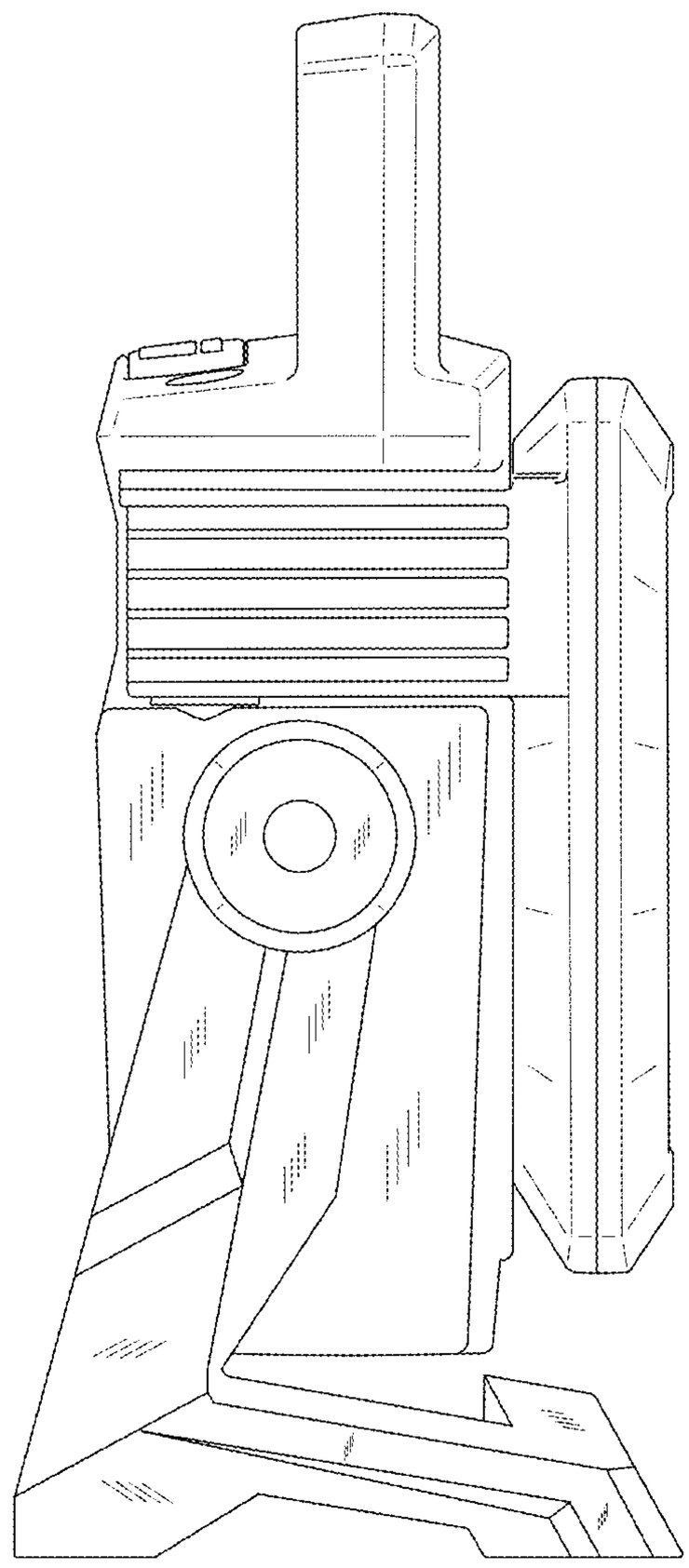

FIG.4

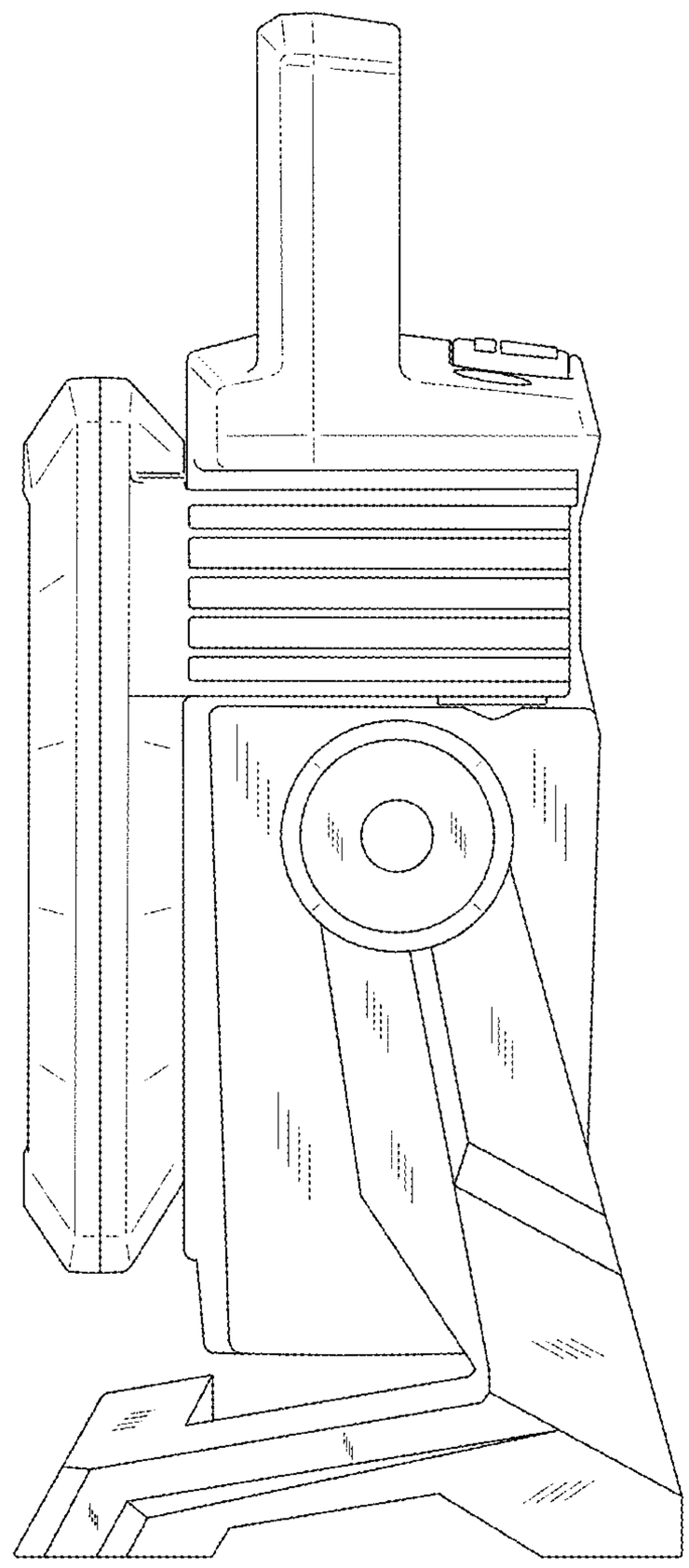

FIG.5

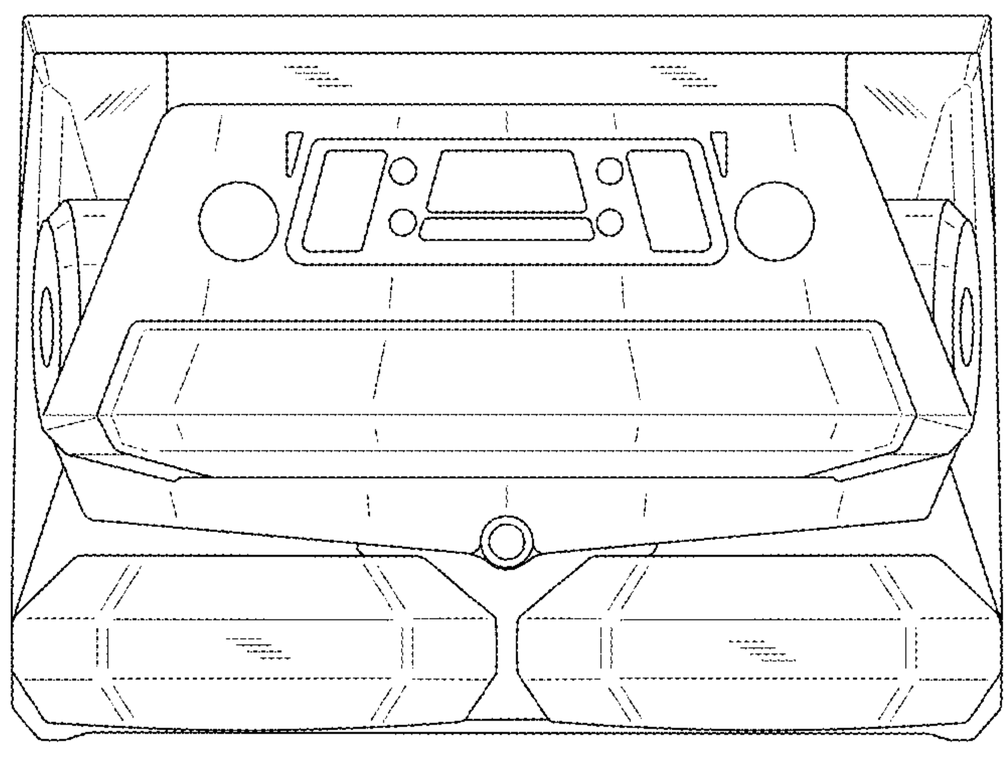

FIG.6

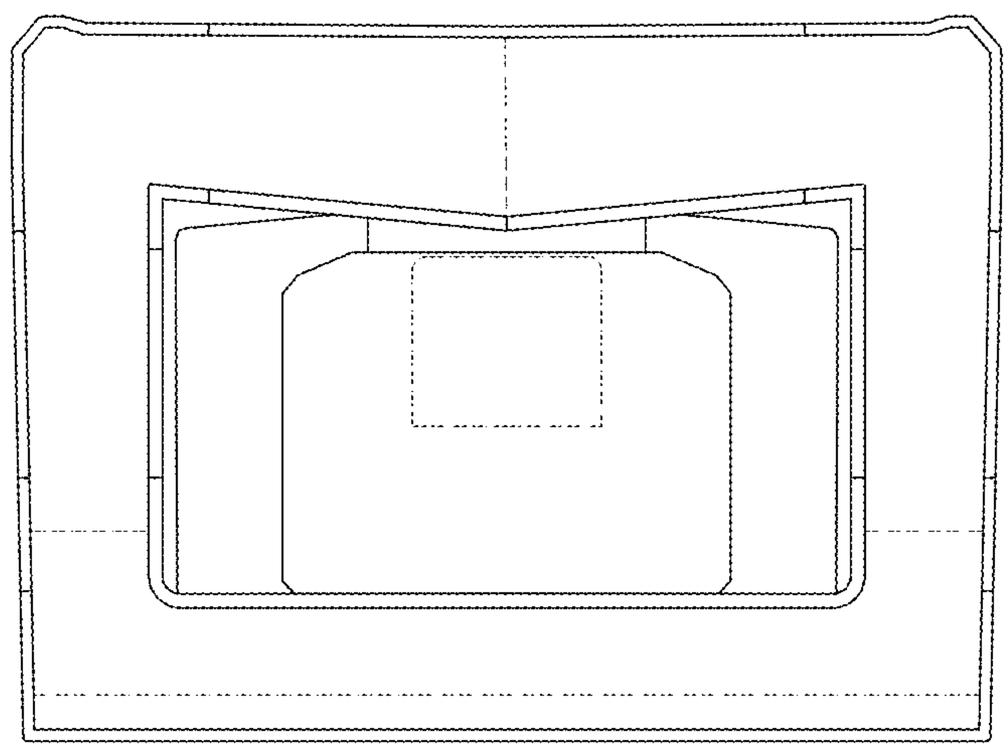

FIG.7

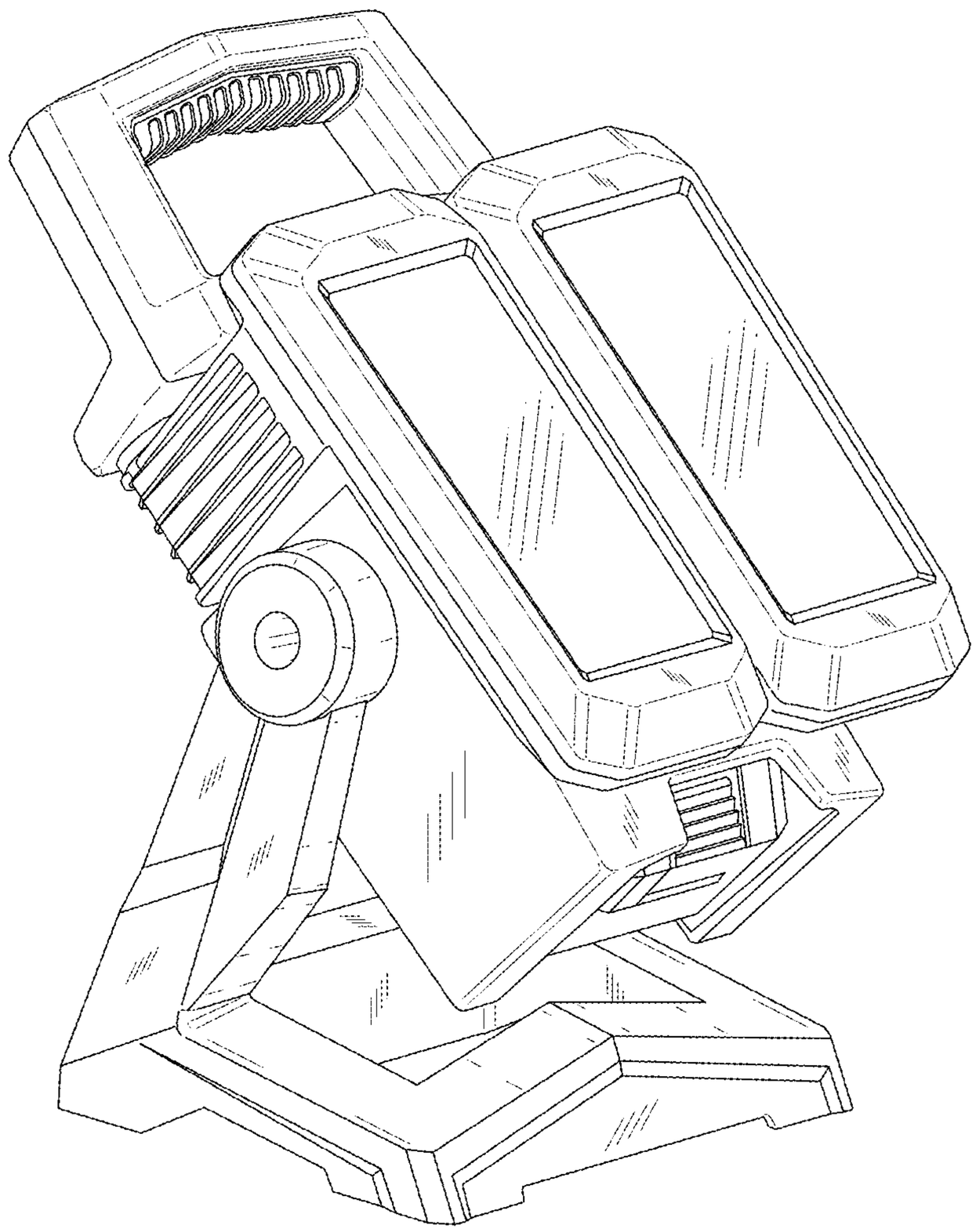

FIG.8

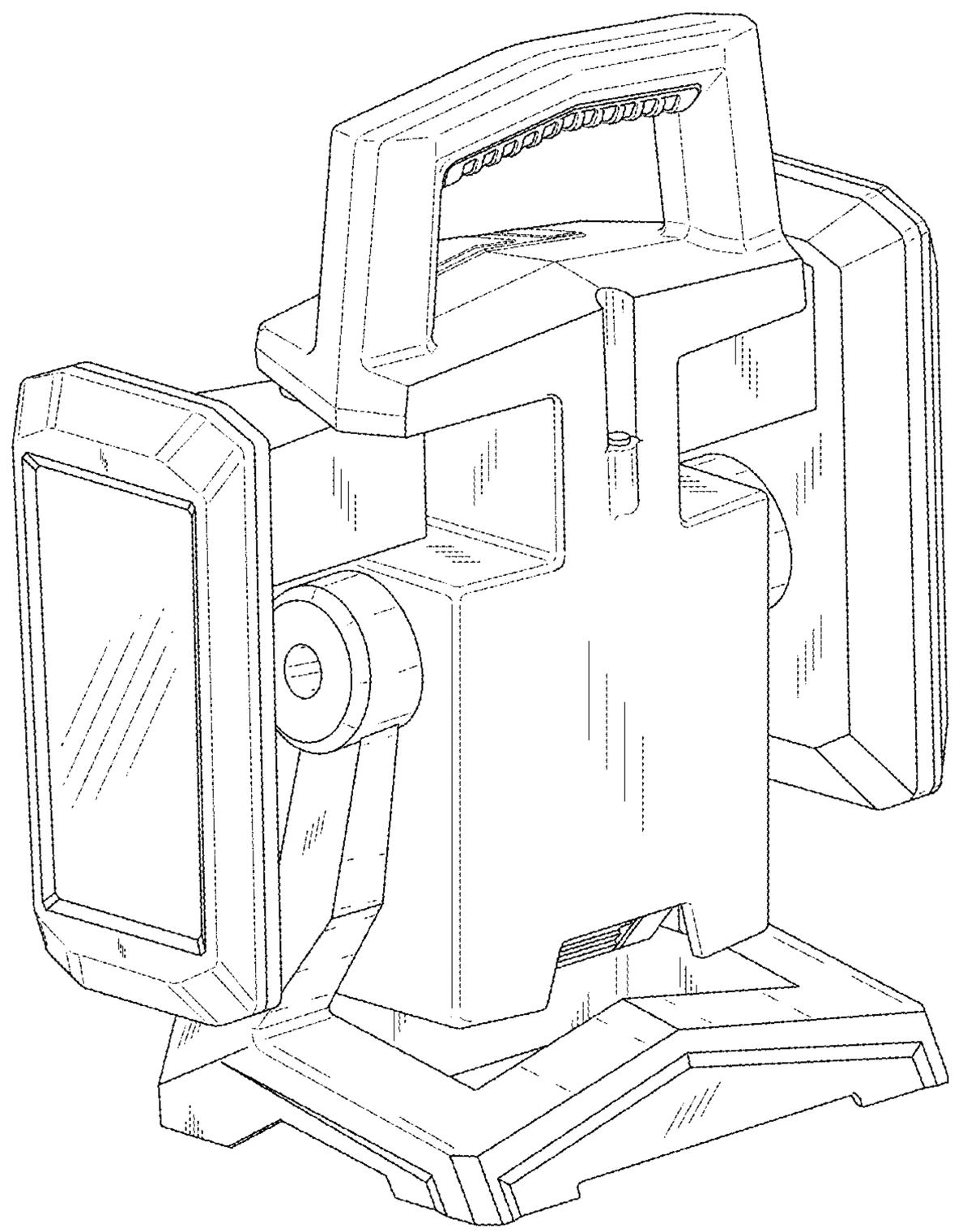

FIG.9