US00D904294S

(12) United States Design Patent

Tsuchiyama

(10) Patent No.: US D904,294 S
(45) Date of Patent: ** Dec. 8, 2020

(54) **POWER SUPPLY UNIT**

(71) Applicant: **Okamura Corporation**, Yokohama (JP)

(72) Inventor: **Waku Tsuchiyama**, Yokohama (JP)

(73) Assignee: **Okamura Corporation**, Yokohama (JP)

(**) Term: **15 Years**

(21) Appl. No.: **29/641,884**

(22) Filed: **Mar. 26, 2018**

(30) **Foreign Application Priority Data**

Sep. 29, 2017 (JP) 2017-021552

(51) **LOC (12) Cl.** **13-02**

(52) **U.S. Cl.**
USPC **D13/108**

(58) **Field of Classification Search**
USPC D13/107–110, 118–119, 184; D14/251, D14/253, 432, 434
CPC Y02E 60/12; Y02T 90/14; Y02T 90/122; Y02T 90/128; Y02T 90/163; H02J 7/025; H02J 7/0042; H02J 7/0044; H02J 7/0045; H02J 7/0013; H02J 7/0003; H01F 38/14; H01R 13/6675; H01M 2/1022; H01M 2/1055; H01M 10/44; H01M 10/46; H01M 10/425; B60L 11/182
See application file for complete search history.

(56) **References Cited**

U.S. PATENT DOCUMENTS

2,505,424 A * 4/1950 Moseley H01Q 19/17 343/776
D168,280 S * 11/1952 Schwarz D26/93
D222,567 S * 11/1971 Cohen D6/680
D228,984 S * 11/1973 Miller D6/675
D372,999 S * 8/1996 Swanson D26/110
D392,755 S * 3/1998 Khachatrian D26/9
D421,439 S * 3/2000 Giuntoli D14/230
D459,830 S * 7/2002 Dolan D26/110
D482,270 S * 11/2003 Derilo D8/397
D627,718 S * 11/2010 Houghton D13/108
D631,518 S * 1/2011 Coote D21/679
D694,451 S * 11/2013 Fang D26/70
D695,725 S * 12/2013 Taeger D14/230
D704,178 S * 5/2014 Kwak D14/240
D723,011 S * 2/2015 Symons D14/224
D745,153 S * 12/2015 Dowdell D24/108
D772,850 S * 11/2016 Safstrom D14/233
D794,557 S * 8/2017 Kim D13/108
D797,042 S * 9/2017 Miller D13/107
(Continued)

Primary Examiner — Nathaniel D. Buckner
(74) *Attorney, Agent, or Firm* — Sughrue Mion, PLLC

(57) **CLAIM**

The ornamental design for a power supply unit, as shown and described.

DESCRIPTION

FIG. **1** is a perspective view of a power supply unit.
FIG. **2** is a front elevation view thereof. The rear elevation view is identical to the front elevation view.
FIG. **3** is a right side elevation view thereof. The left side elevation view is identical to the right side elevation view.
FIG. **4** is a top plan view thereof.
FIG. **5** is a bottom plan view thereof.
FIG. **6** is an enlarged cross-sectional view taken along the line **6-6** in FIG. **4**.
FIG. **7** is a perspective view thereof, shown in an environment of use; and,
FIG. **8** is a perspective view thereof, shown in a second environment of use.
The broken lines shown in the drawings illustrate portions of the power supply unit that form no part of the claimed design.

1 Claim, 8 Drawing Sheets

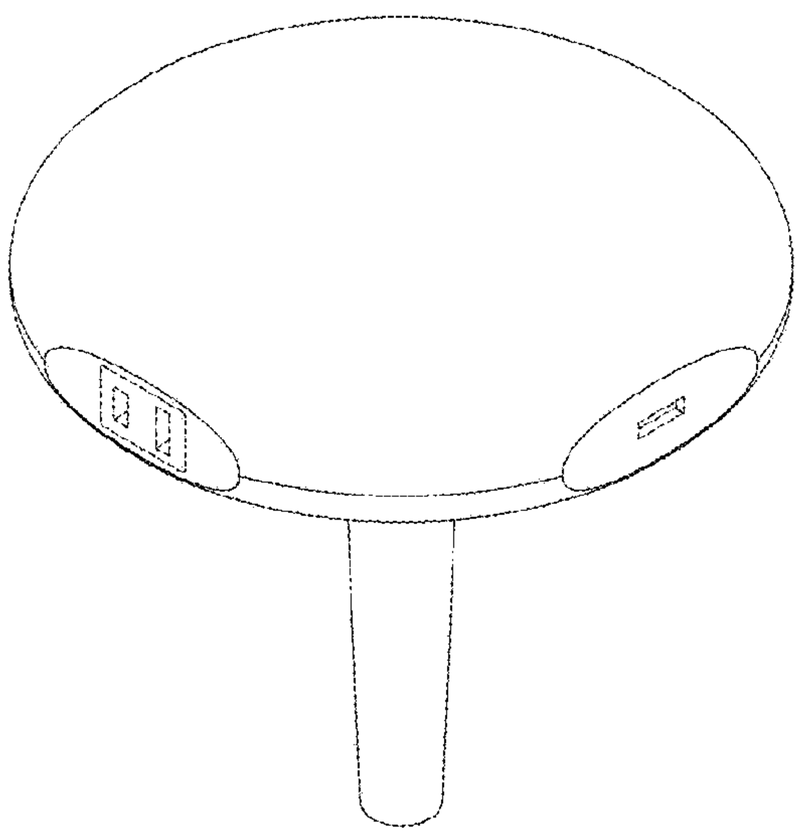

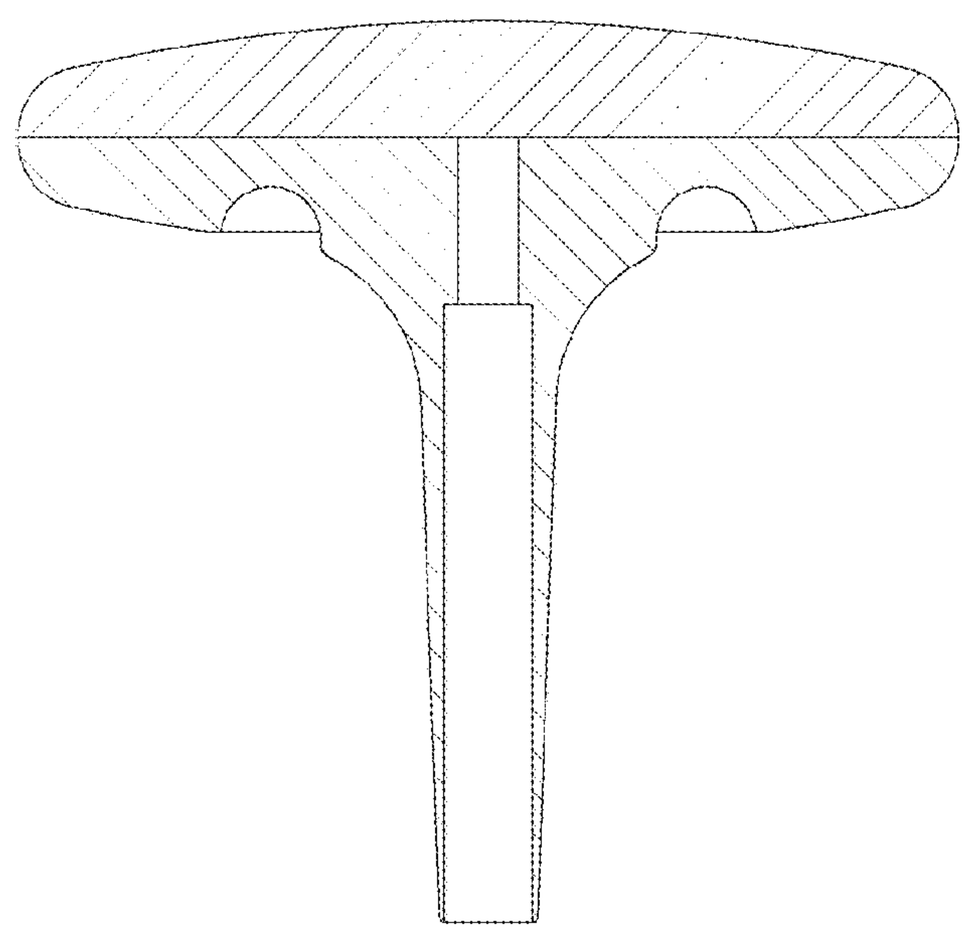

(56) **References Cited**

U.S. PATENT DOCUMENTS

D807,288	S	*	1/2018	Kim	D13/107
D829,696	S	*	10/2018	Wallace	D14/233
D834,330	S	*	11/2018	Louisa	D4/127
D842,241	S	*	3/2019	Hasani	D13/107
D870,664	S	*	12/2019	Langhammer	D13/108
D874,399	S	*	2/2020	Lockenwitz	D13/108

* cited by examiner

FIG. 1

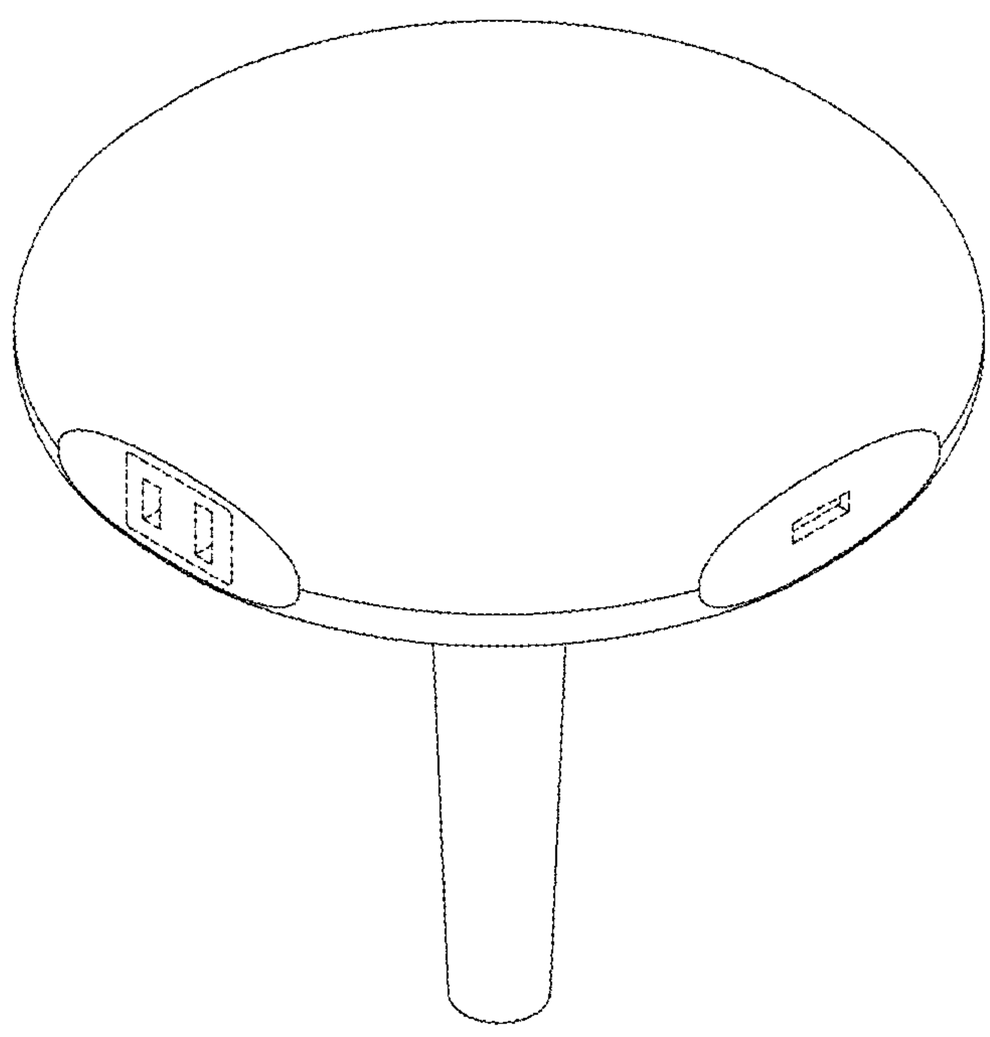

FIG. 2

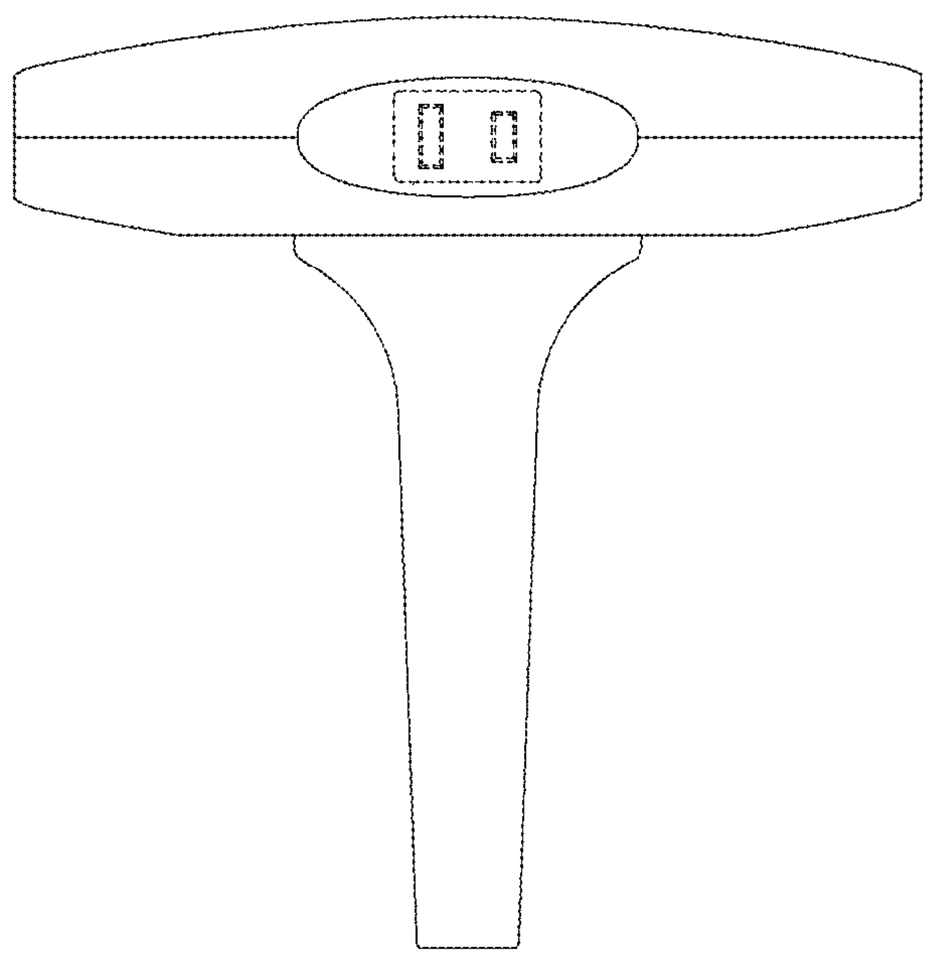

FIG. 3

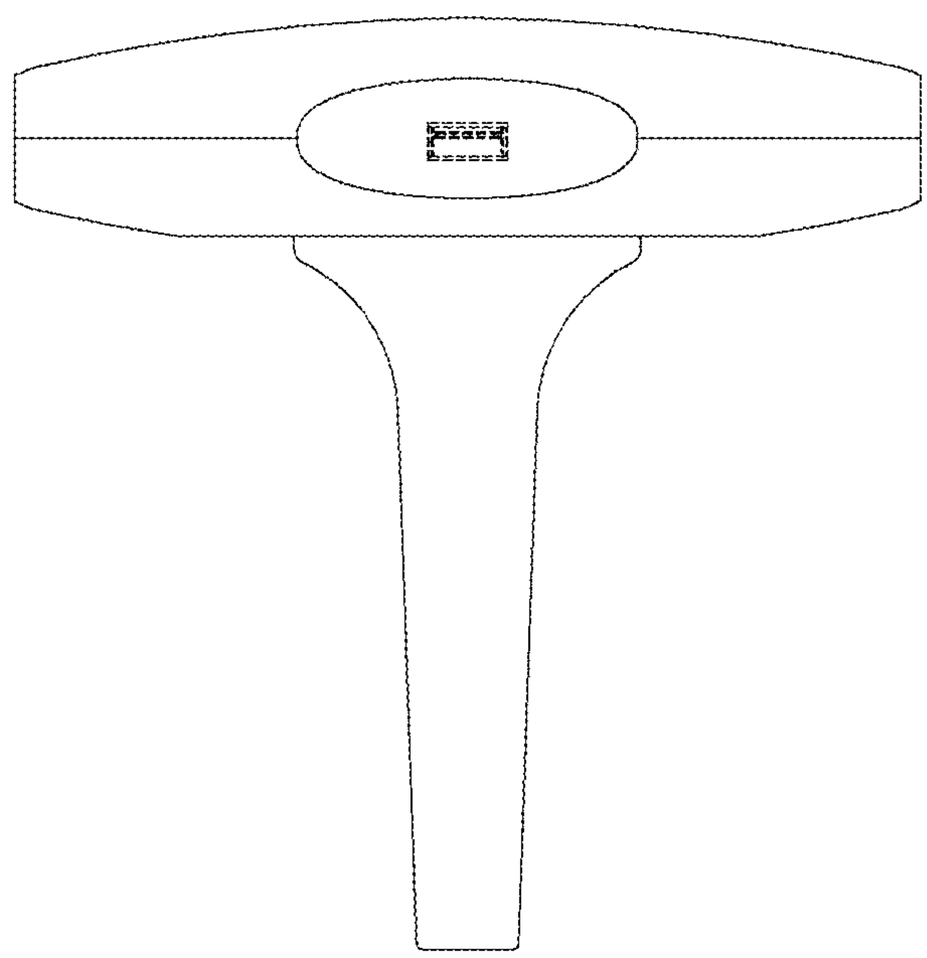

FIG. 4

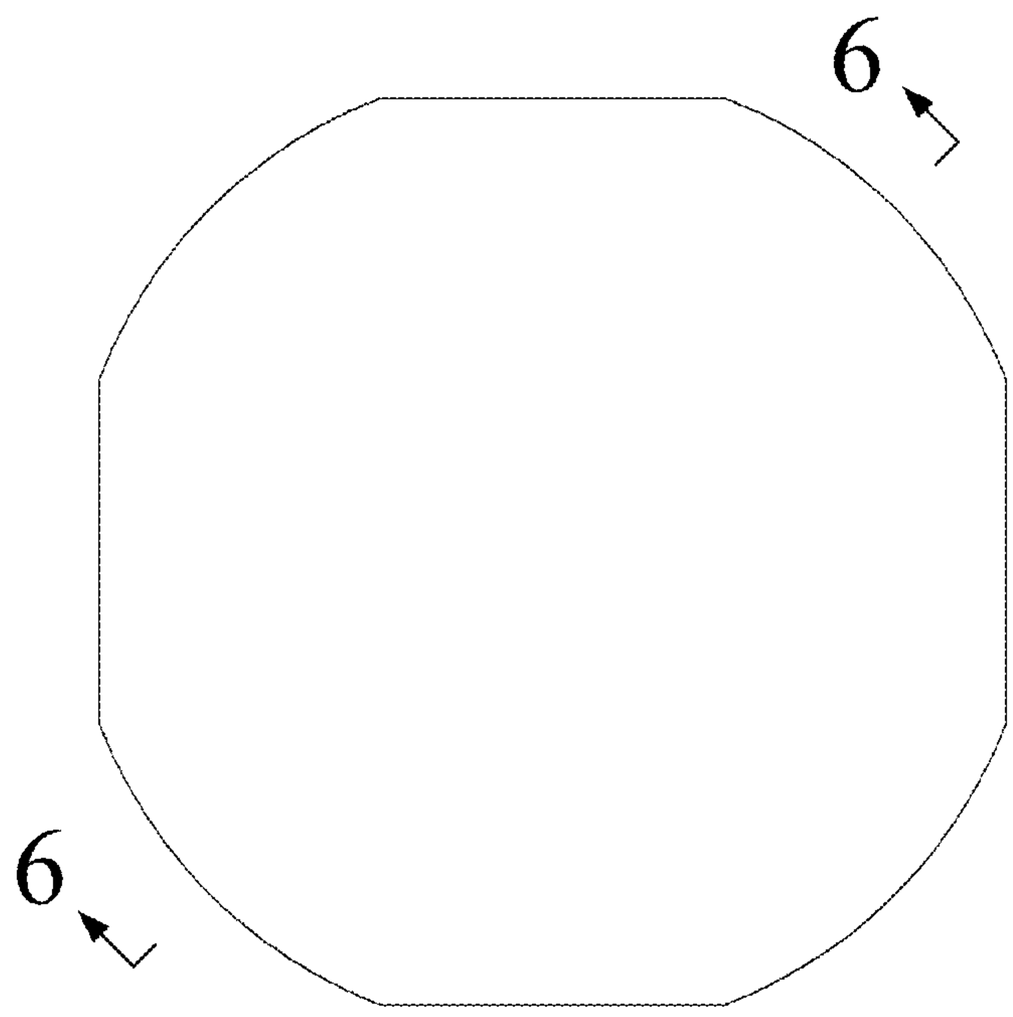

FIG. 5

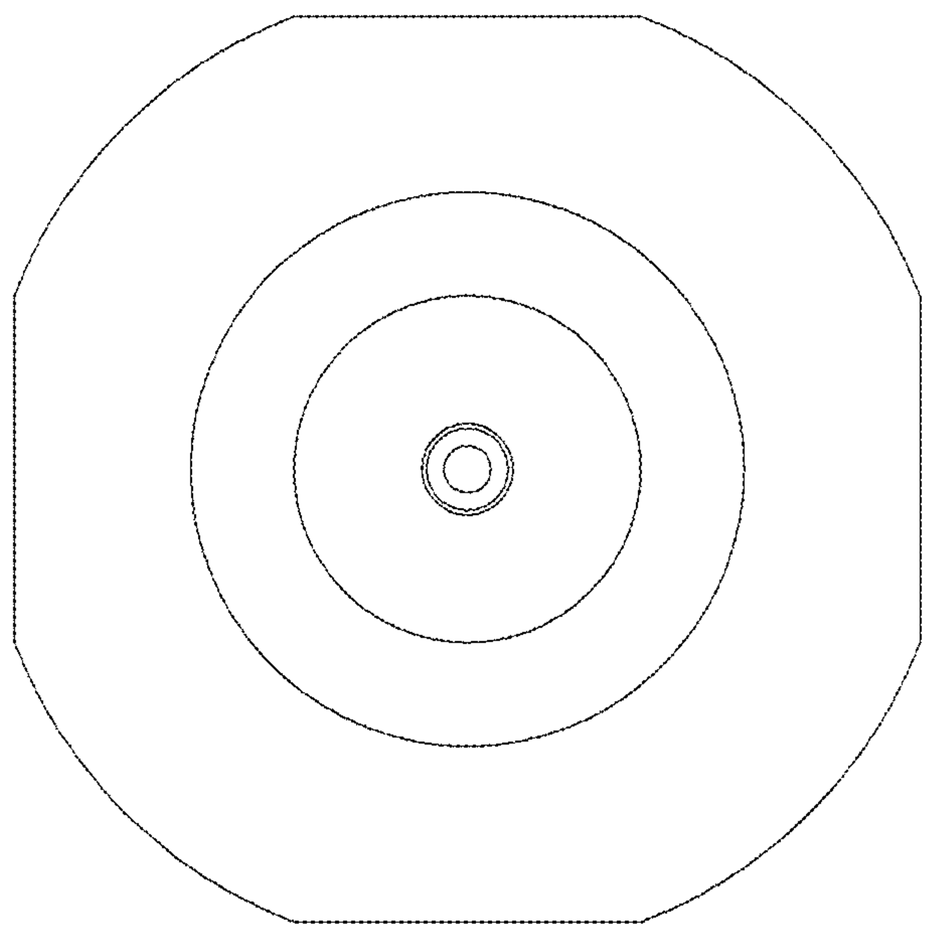

FIG. 6

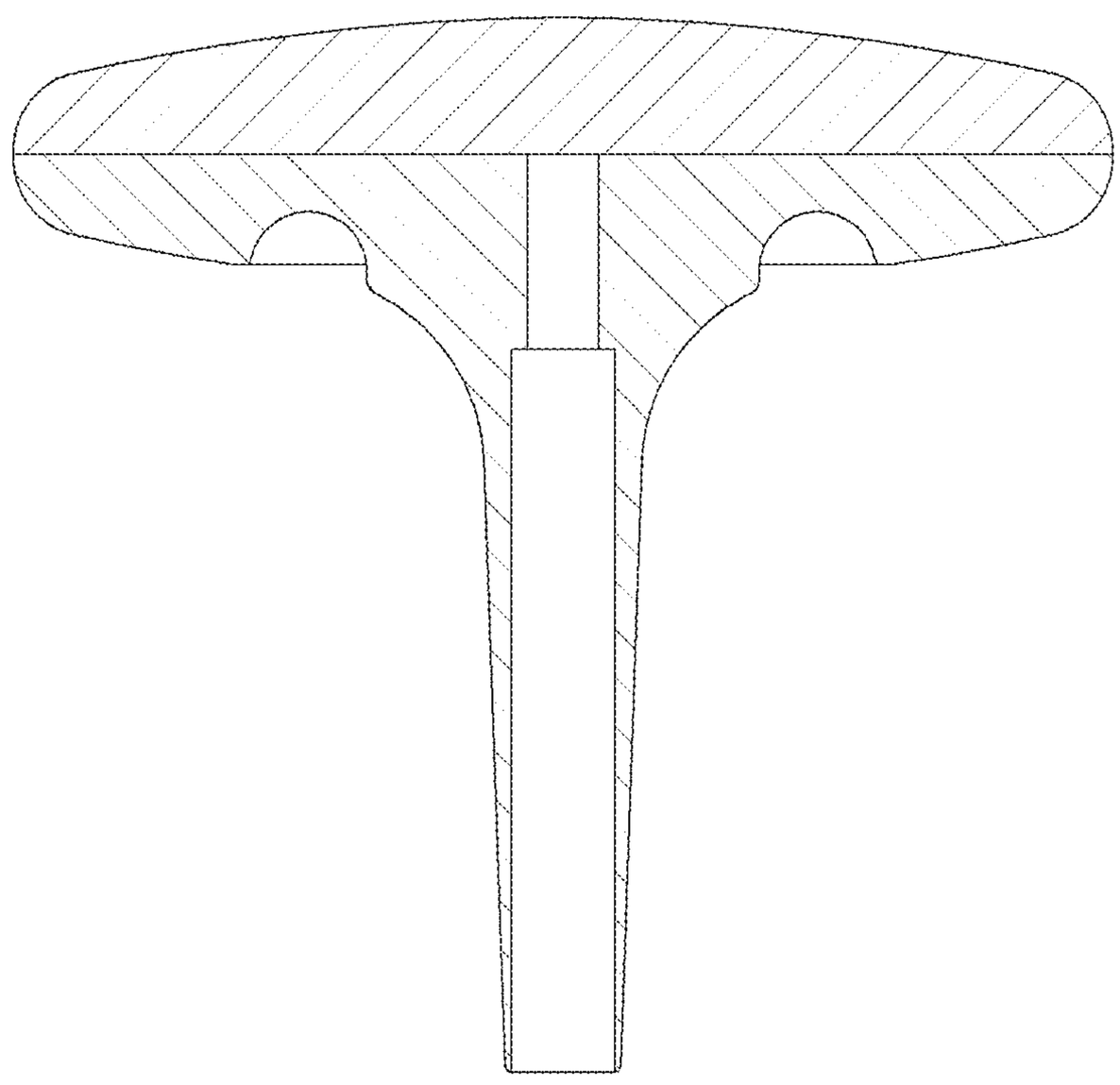

FIG. 7

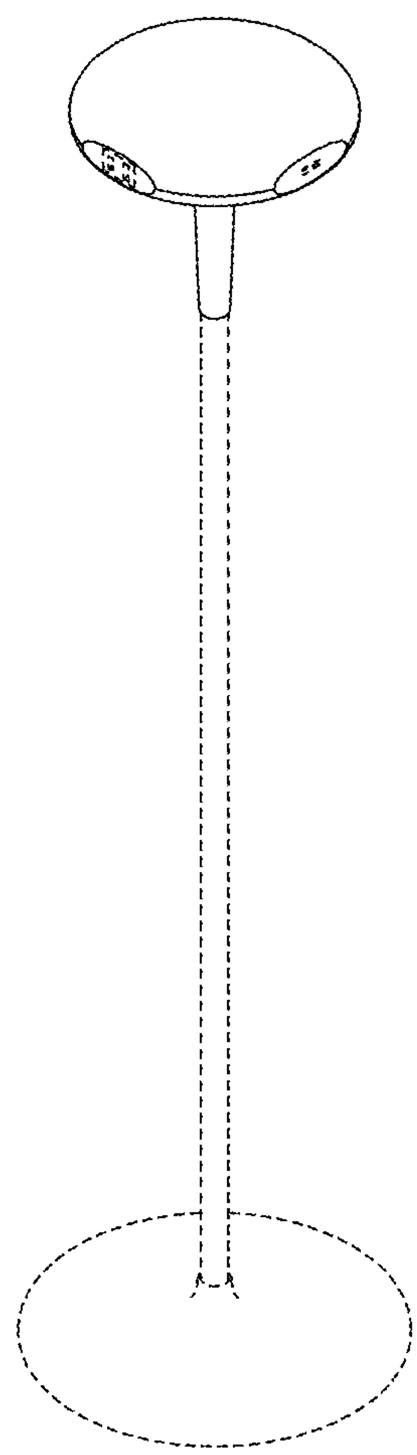
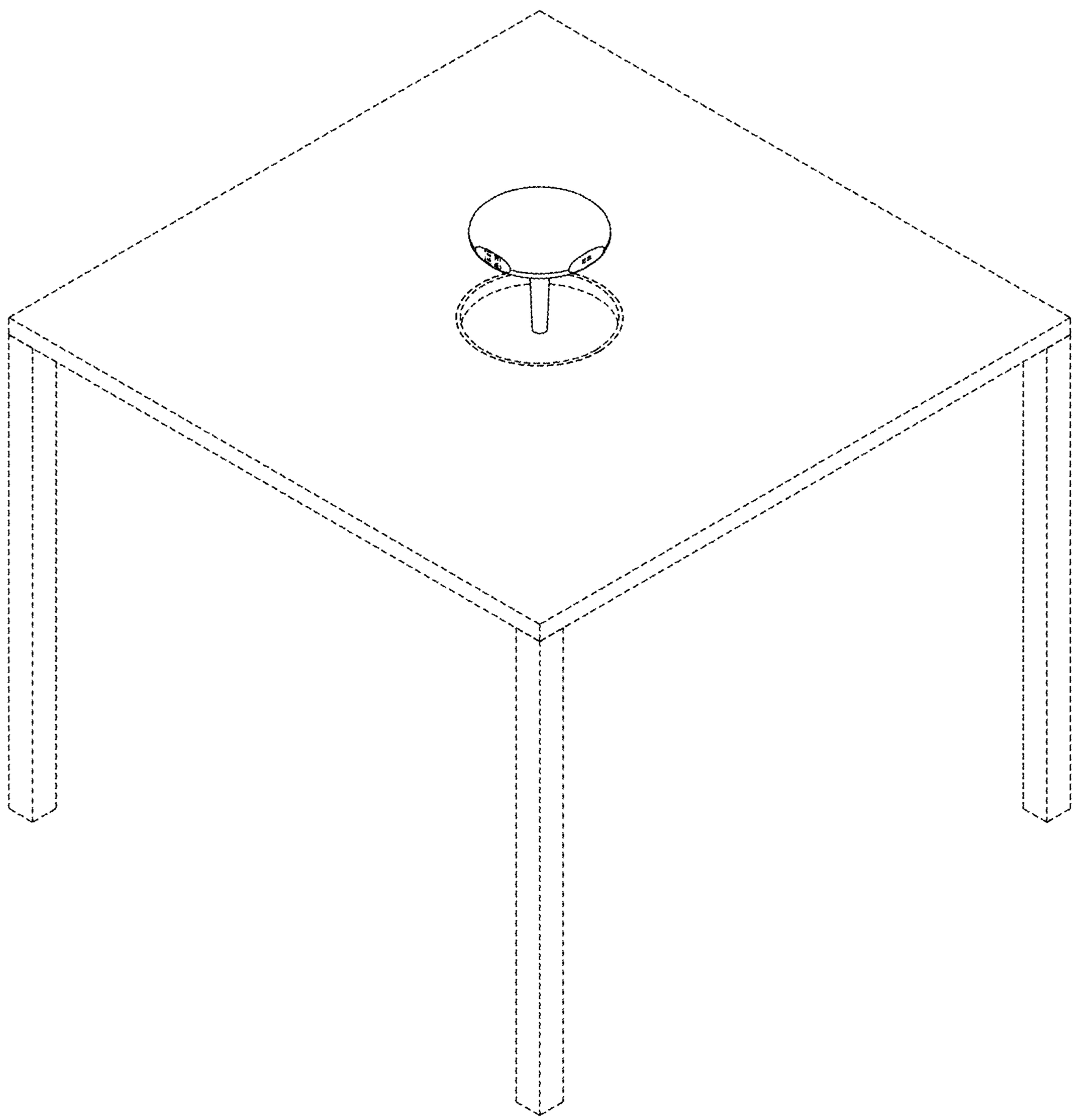
FIG. 8