US00D903934S

(12) United States Design Patent

Moses et al.

(10) Patent No.: US D903,934 S
(45) Date of Patent: ** *Dec. 1, 2020

(54) **SEGMENTED LIGHT FIXTURE WITH CEILING MOUNT**

(71) Applicant: **USAI, LLC**, New Windsor, NY (US)

(72) Inventors: **Eran Moses**, New Windsor, NY (US); **John P. Harkins-Fleischmann**, Bloomingdale, NJ (US); **Yorgo Lykouria**, London (GB); **Thomas Adam Kaczkowski**, University City, MO (US)

(73) Assignee: **USAI, LLC**, New Windsor, NY (US)

(*) Notice: This patent is subject to a terminal disclaimer.

(**) Term: **15 Years**

(21) Appl. No.: **29/711,500**

(22) Filed: **Oct. 31, 2019**

(51) **LOC (12) Cl.** **26-05**

(52) **U.S. Cl.**
USPC **D26/138**; D26/88

(58) **Field of Classification Search**
USPC D26/61, 72, 74, 76, 78–83, 85, 86, 88, D26/90, 93, 111, 113, 118, 119, 120, 121, D26/122, 138, 139, 140, 141, 142, 152
(Continued)

(56) **References Cited**

U.S. PATENT DOCUMENTS

D565,787 S * 4/2008 DeCicco D26/138
D621,083 S * 8/2010 Coushaine D26/61
(Continued)

OTHER PUBLICATIONS

Bonou, Chandelier Ceiling Pendant Light, https://www.ebay.com.au/itm/163039675072, retrieved from the Internet on Jul. 31, 2019.
(Continued)

Primary Examiner — Natasha Vujcic
(74) *Attorney, Agent, or Firm* — St. Onge Steward Johnston & Reens LLC

(57) **CLAIM**

The ornamental design for a segmented light fixture with ceiling mount, as shown and described.

DESCRIPTION

FIG. **1** is a perspective view, from the bottom, of a first embodiment of a segmented light fixture with ceiling mount in accordance with the new design;
FIG. **2** is a front view thereof, with the rear view being a mirror image;
FIG. **3** is a left side view thereof, with the right side being a mirror image;
FIG. **4** top view thereof;
FIG. **5** is a bottom thereof; and
FIGS. **6-9** are front views thereof, with each view showing an alternate position of the article.
FIG. **10** is a perspective view, from the bottom, of a second embodiment of a segmented light fixture with ceiling mount in accordance with the new design;
FIG. **11** is a left side view thereof, with the right side being a mirror image;
FIG. **12** is a front view thereof, with the rear view being a mirror image;
FIG. **13** is a top view thereof; and
FIG. **14** is a bottom view thereof.
FIG. **15** is a perspective view, from the bottom, of the ceiling mount of the segmented light fixture in Embodiment 1 in accordance with the new design;
FIG. **16** is a perspective view thereof, from the top;
FIG. **17** is a perspective view thereof, from the bottom;
FIG. **18** is a front view thereof, with the rear view being a mirror image;
FIG. **19** is a top view thereof;
FIG. **20** is a bottom view thereof; and
FIG. **21** is a left side view thereof, with the right side being a mirror image.
FIG. **22** is a perspective view, from the bottom, of another embodiment of the ceiling mount of the segmented light fixture in accordance with the new design;
(Continued)

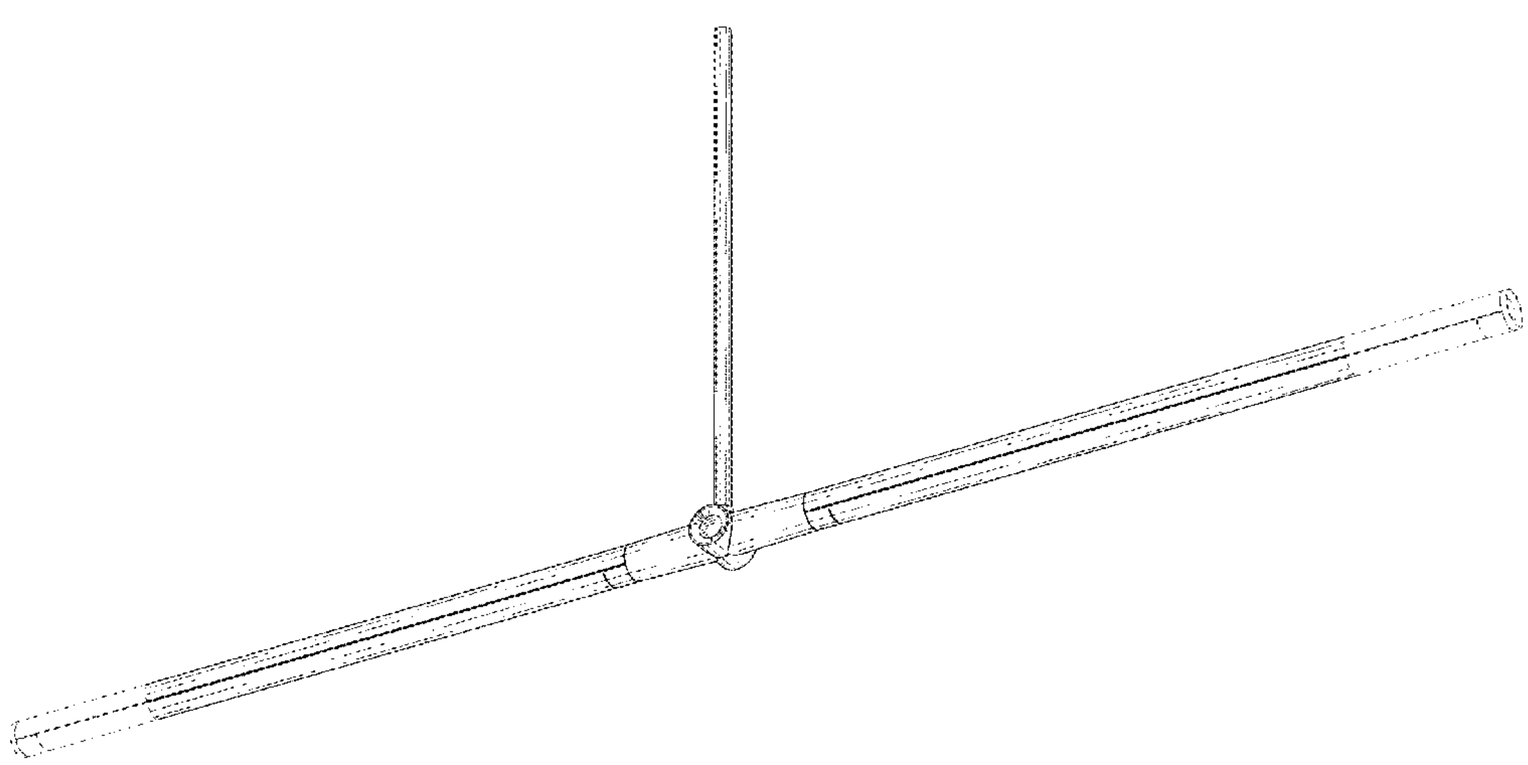

FIG. **23** is a perspective view thereof, from the top;
FIG. **24** is a perspective view thereof, from the bottom;
FIG. **25** is a front view thereof, with the rear view being a mirror image;
FIG. **26** is a top view thereof;
FIG. **27** is a bottom view thereof; and,
FIG. **28** is a left side view thereof, with the right side being a mirror image.
The broken lines shown in the drawings are for the purpose of illustrating portions of the segmented light fixture with ceiling mount that form no part of the claimed design.

1 Claim, 18 Drawing Sheets

(58) **Field of Classification Search**
CPC F21S 2/00; F21S 4/00; F21S 4/003; F21S 4/005; F21S 4/006; F21S 4/007; F21S 4/008; F21S 6/00; F21S 8/00; F21S 8/024; F21S 8/026; F21S 8/031; F21S 8/033; F21S 8/035–037; F21S 8/04; F21S 8/043; F21S 8/063
See application file for complete search history.

(56) **References Cited**

U.S. PATENT DOCUMENTS

D626,264	S	*	10/2010	Liu	D26/61
D636,514	S	*	4/2011	Ruud	D26/61
D642,730	S	*	8/2011	Leadford	D26/138
D657,489	S	*	4/2012	Johnstone	D26/138
D657,905	S	*	4/2012	Yu	F21S 8/06 D26/138
D657,906	S	*	4/2012	Yu	D26/138
D669,629	S	*	10/2012	Yu	F21S 8/06 D26/155
D669,630	S	*	10/2012	Yu	D26/155
D689,647	S	*	9/2013	Brott	D26/86
D756,558	S	*	5/2016	Paulsen	D26/142
D788,358	S	*	5/2017	Sonneman	D26/138
D831,257	S	*	10/2018	Boulanger	D26/76
D840,086	S	*	2/2019	Deng	D26/76
D851,805	S	*	6/2019	Chen	D26/76
D858,853	S	*	9/2019	Anastassiades	D26/76
D865,260	S	*	10/2019	Arola	D26/76
D866,045	S	*	11/2019	Anastassiades	D26/88
D866,047	S	*	11/2019	Anastassiades	D26/88
D869,745	S	*	12/2019	Sonneman	D26/138

OTHER PUBLICATIONS

Benedict Hobson, "OMA draws on the 'fundamentals of geometry' for XY180 lights"Dezeen, https://www.dezeen.com/2018/04/11/video-interview-ippolito-pestellini-laparelli-oma-xy180-delta-light-movie/, Apr. 11, 2018.
Juniper, "Thin Task Lamp T with Wall Mount", www.juniper-design.com, https://www.juniper-design.com/products/thin-task-lamp-wall-mount/, 2019.
Seed Design, "Laito Gentle", Seed Lighting Design Co., Ltd., www.SeedDesignUSA.com, 2018.
Medical Illumination, "Installation and Service Manual", 37 pages, undated.
Greenhouse Megastore, "PVC Adjustable 2-Way L", https://www.greenhousemegastore.com/hardware-diy/pvc-fittings/pvc-adjustable-2-way-I, retrieved from the Internet on Oct. 11, 2019.
Rebrilliant Rhoades, "Slip Stream LED Swing Arm Lamp", www.wayfair.com, https://www.wayfair.com/lighting/pdp/rebrilliant-rhoades-slip-stream-led-swing-arm-lamp-w001019352.html, retrieved from internet on Jul. 31, 2019.
Stickbulb, "Multiple Pendant" Lamp, https://www.architonic.com/en/product/stickbulb-multiple-pendant/1425152, retrieved from the Internet on Jul. 31, 2019.

* cited by examiner

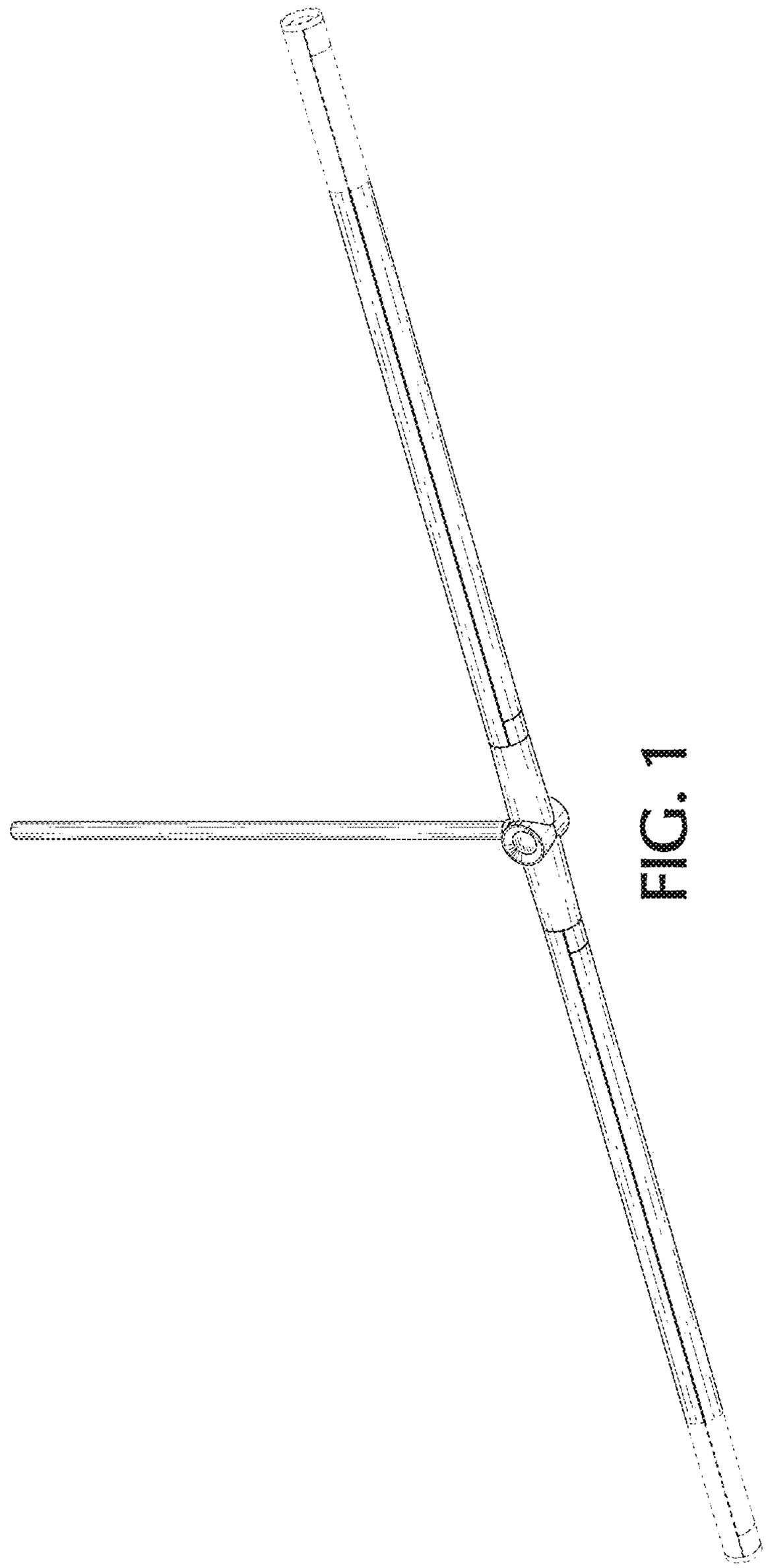

FIG. 1

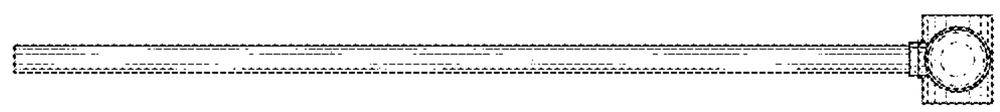

FIG. 3

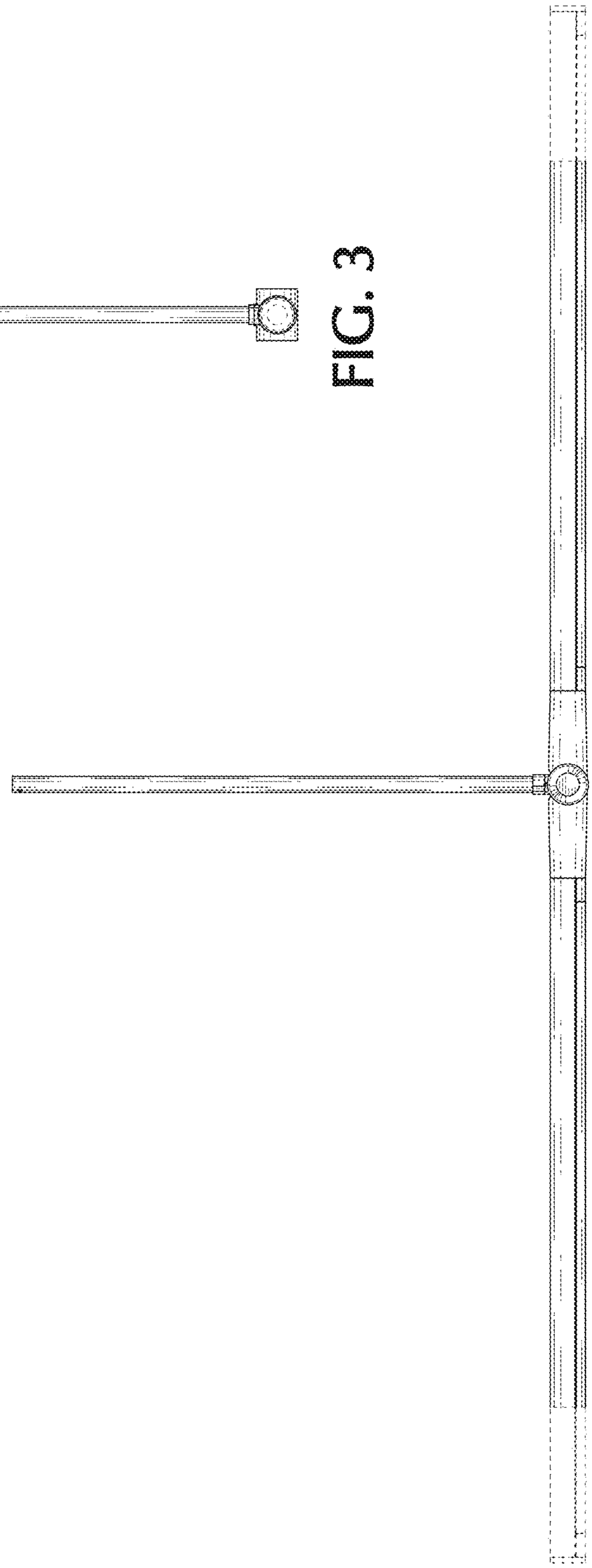

FIG. 2

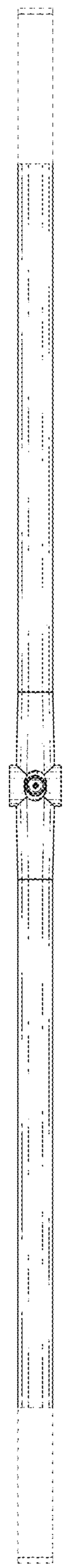

FIG. 4

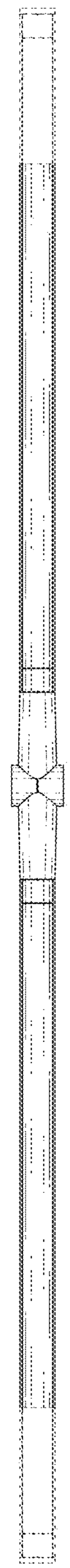

FIG. 5

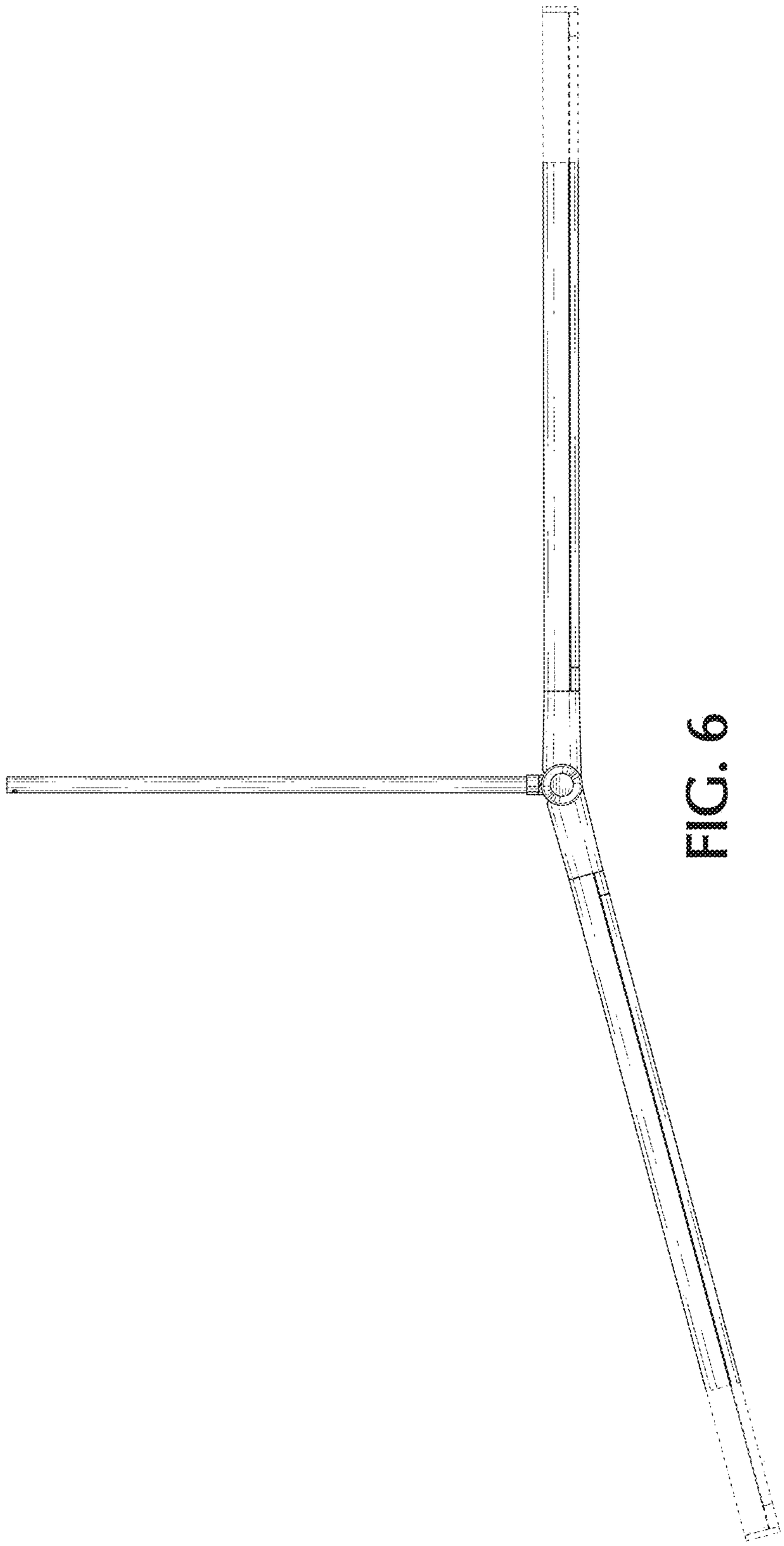

FIG. 6

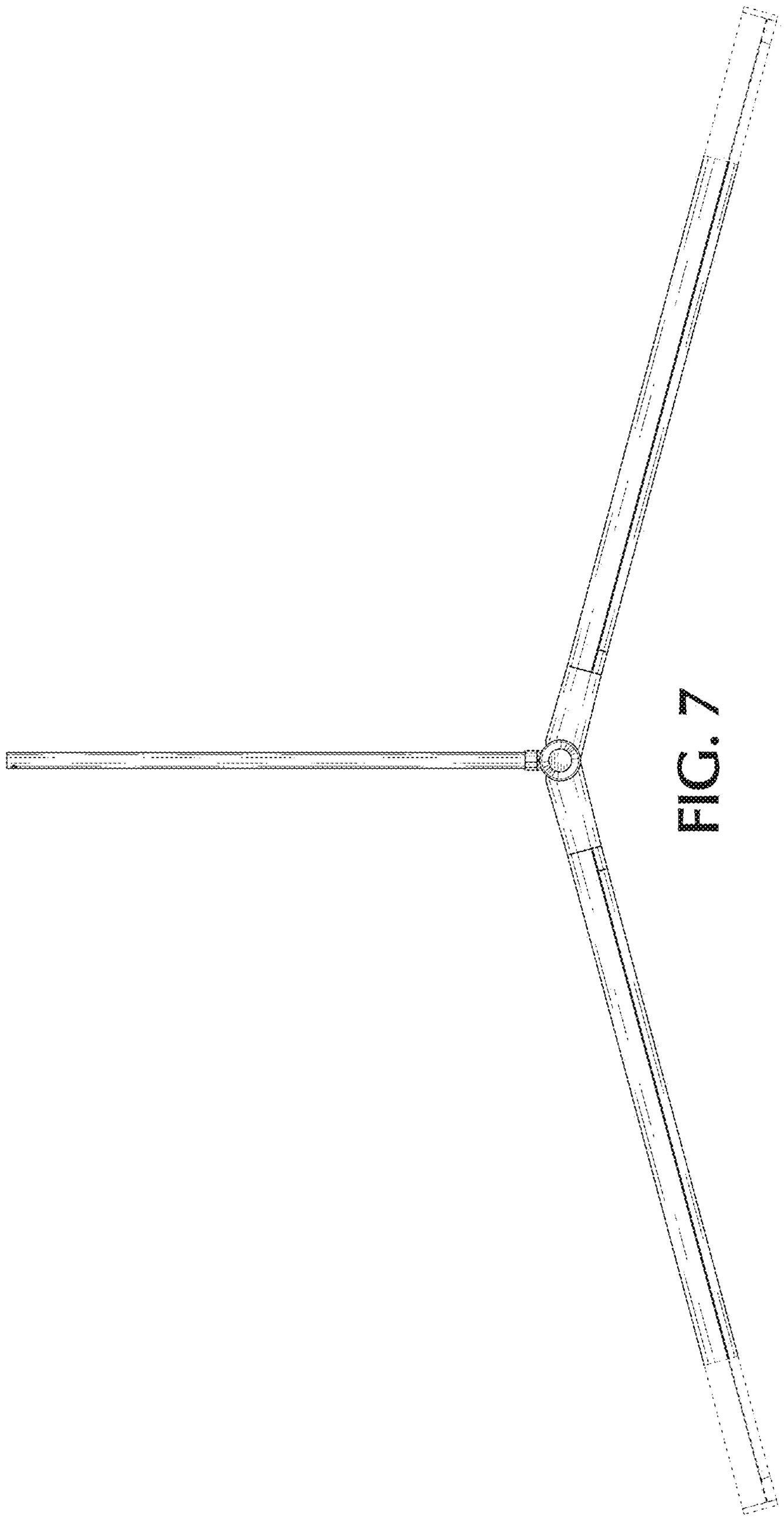

FIG. 7

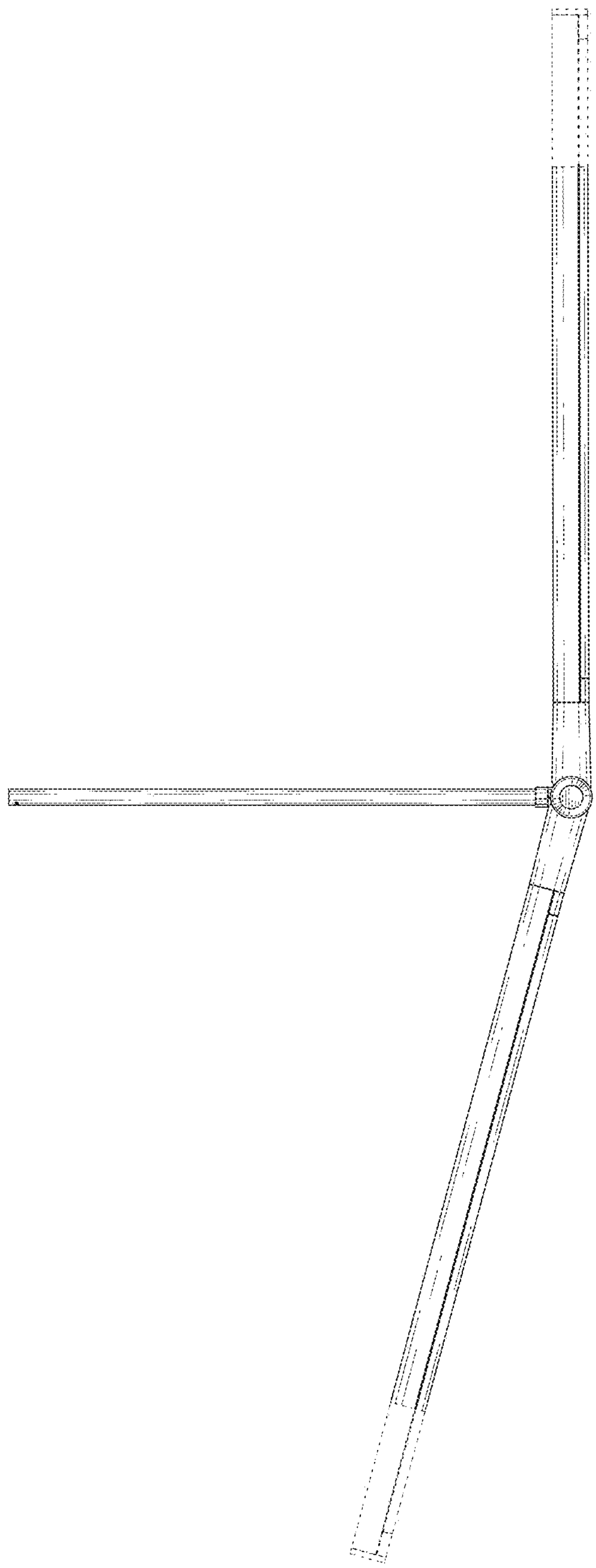

FIG. 8

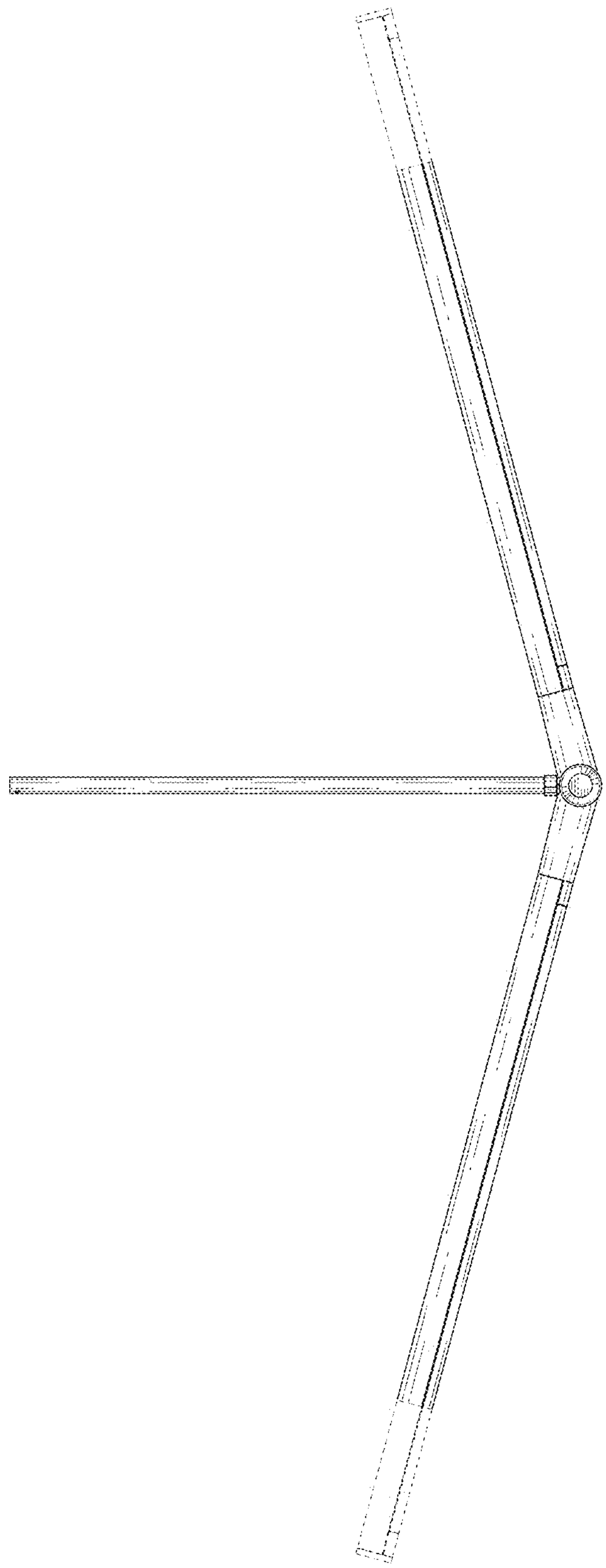

FIG. 9

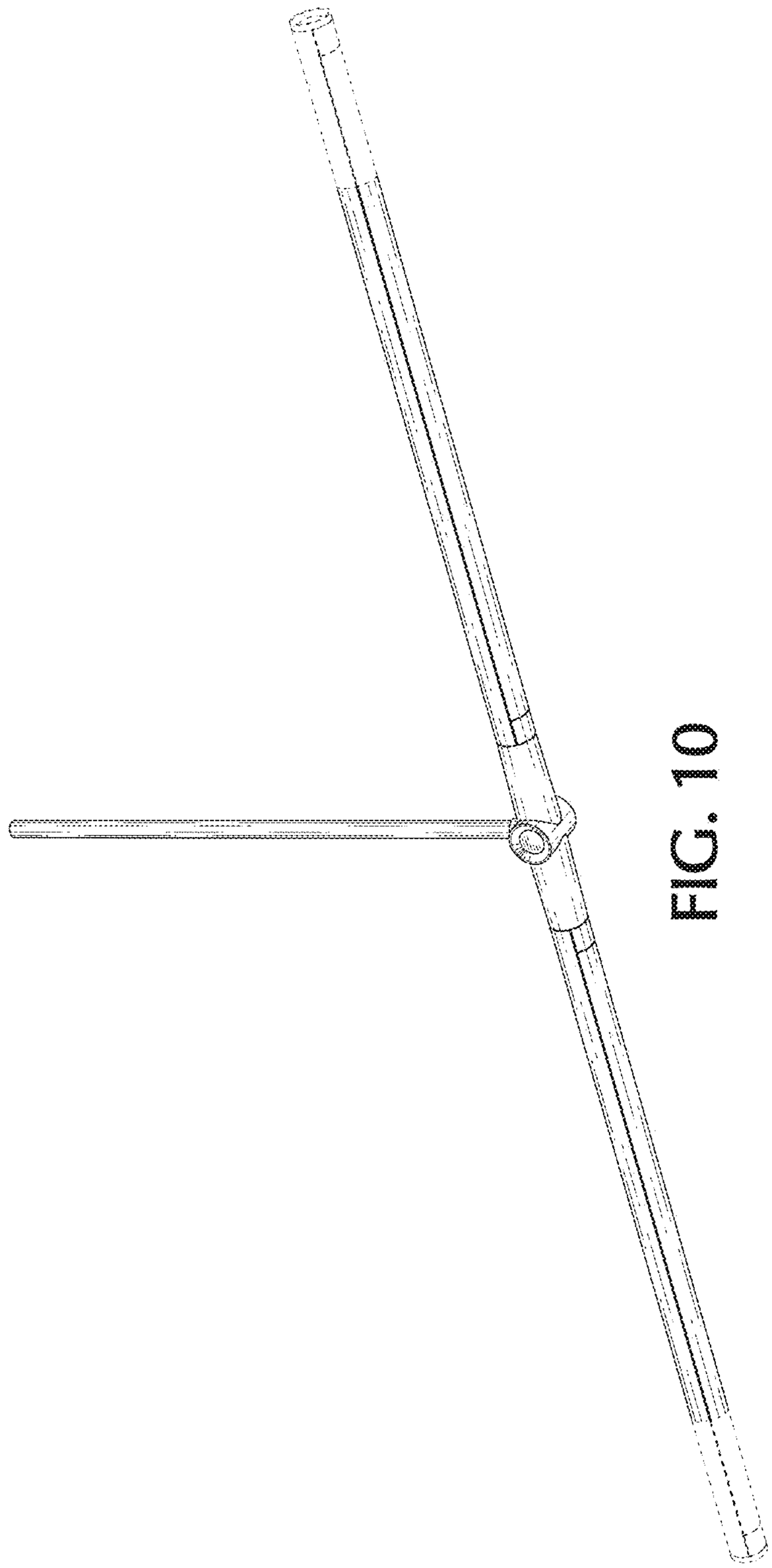

FIG. 10

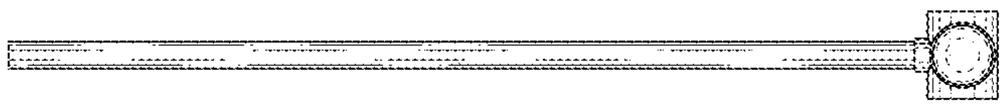

FIG. 11

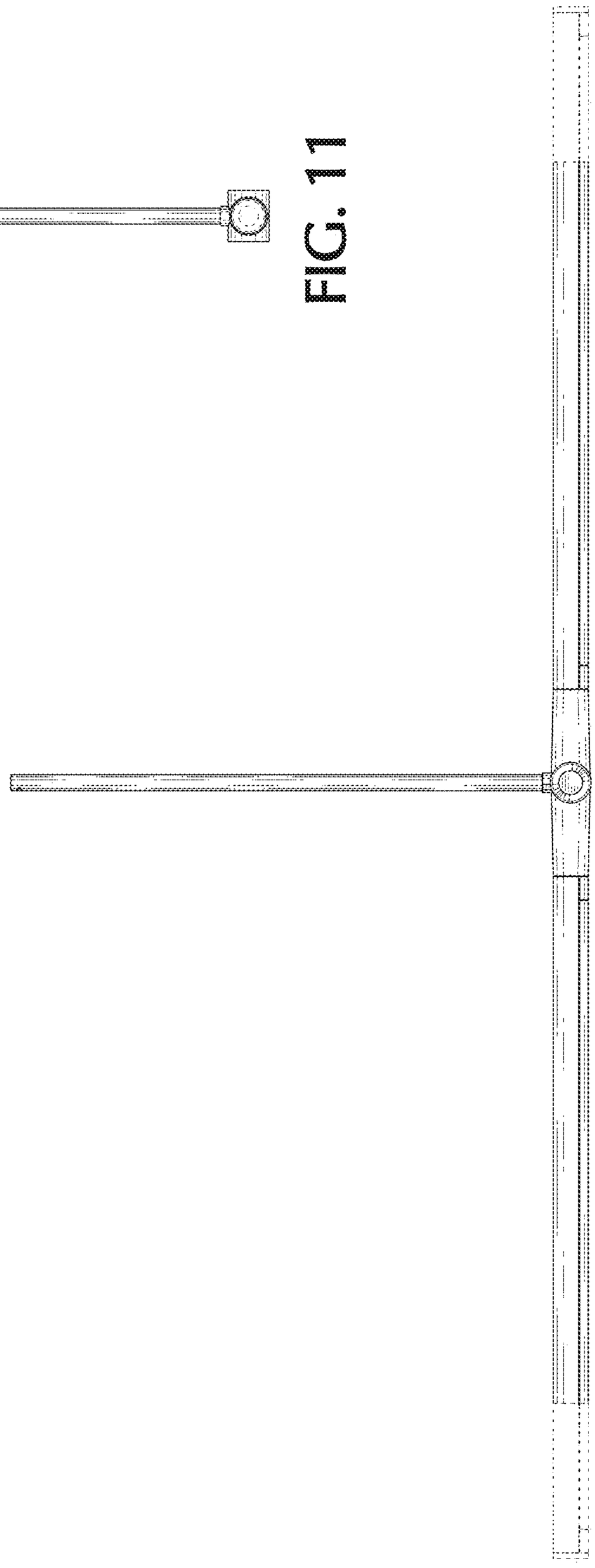

FIG. 12

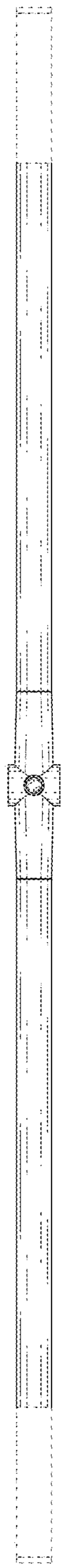

FIG. 13

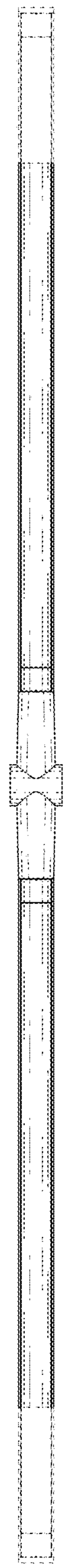

FIG. 14

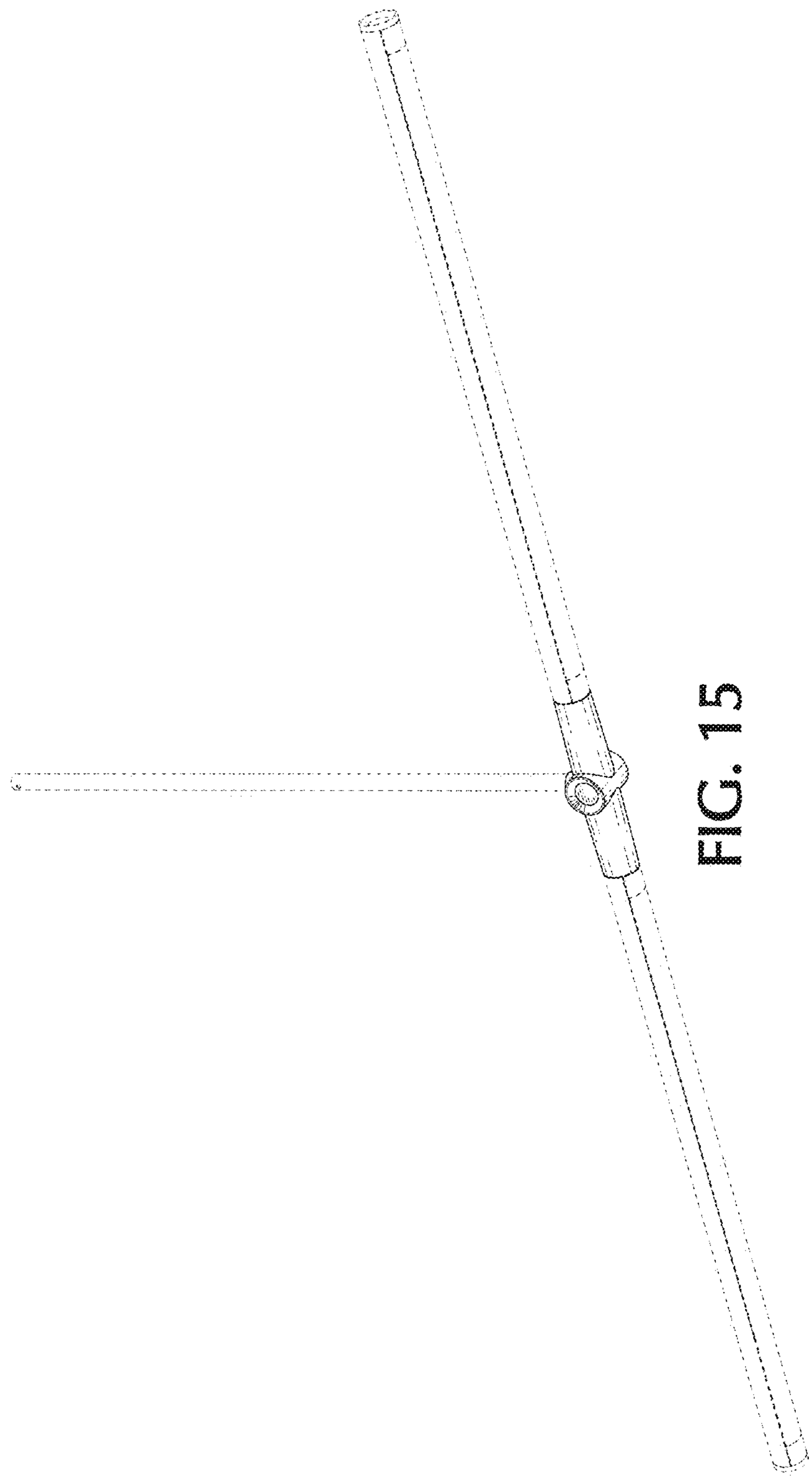

FIG. 15

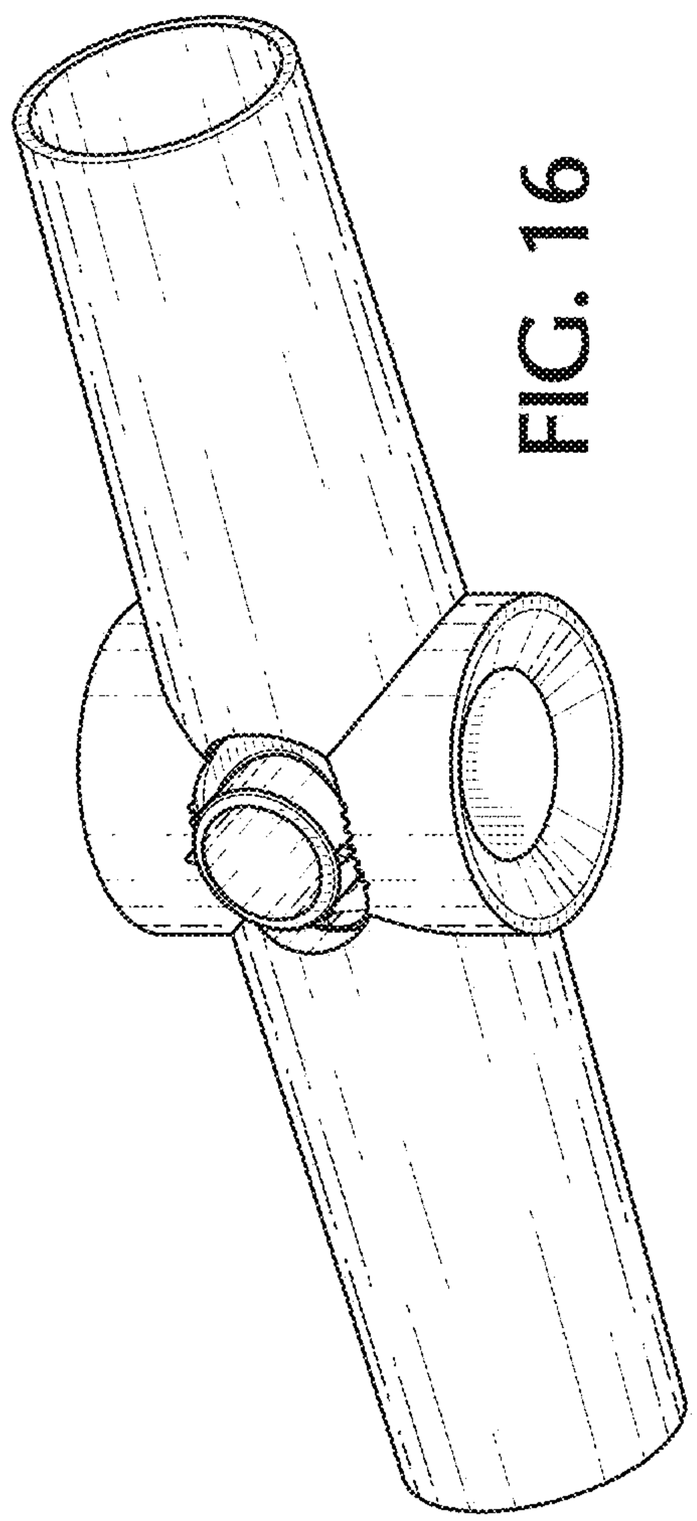

FIG. 16

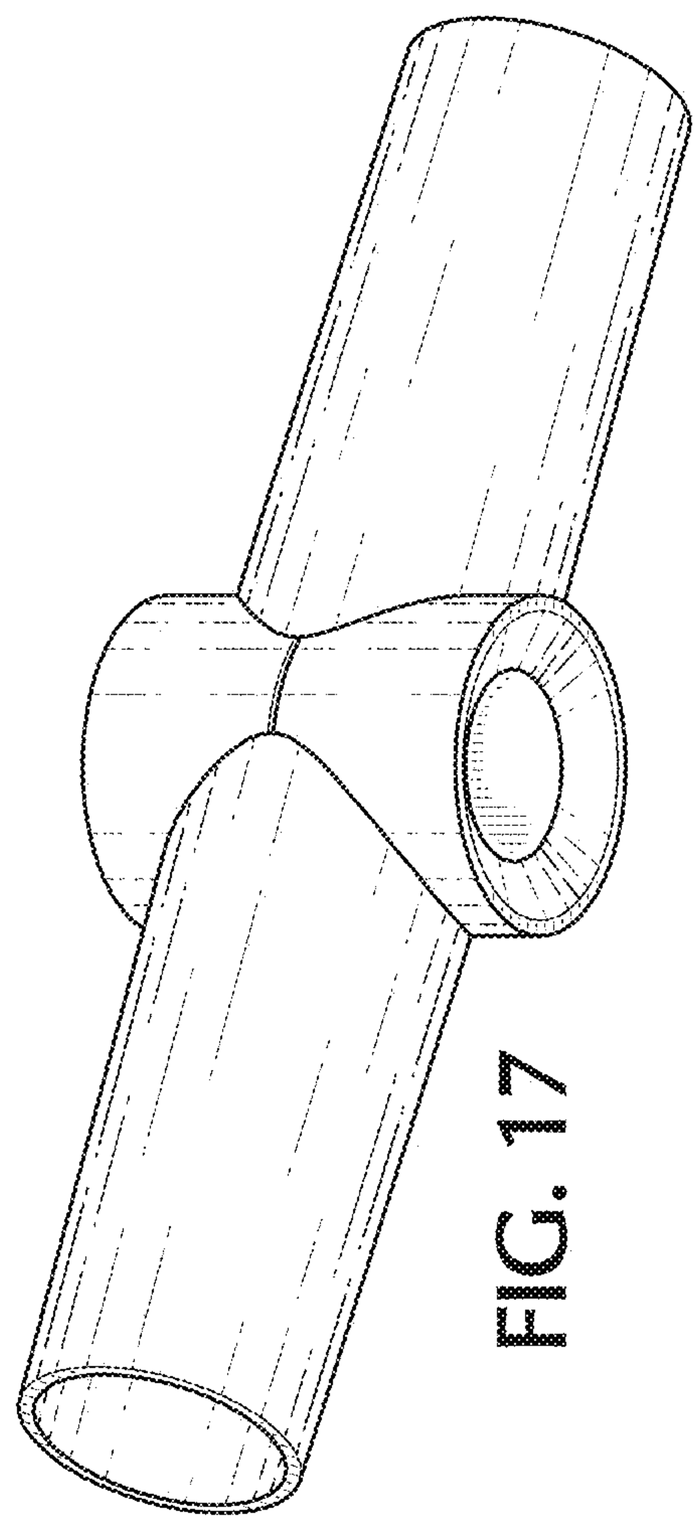

FIG. 17

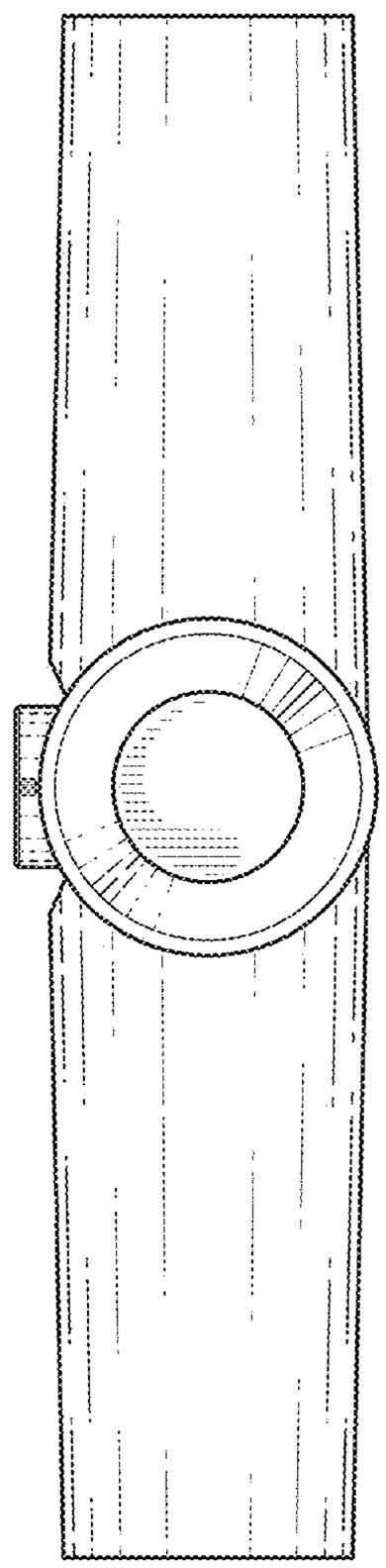

FIG. 18

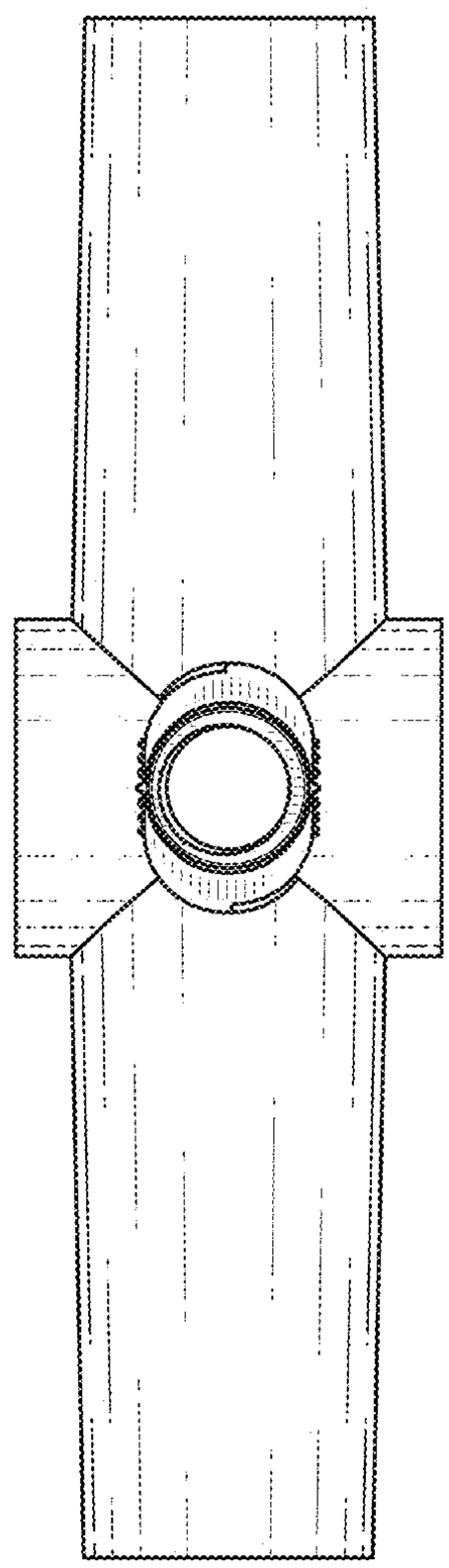

FIG. 19

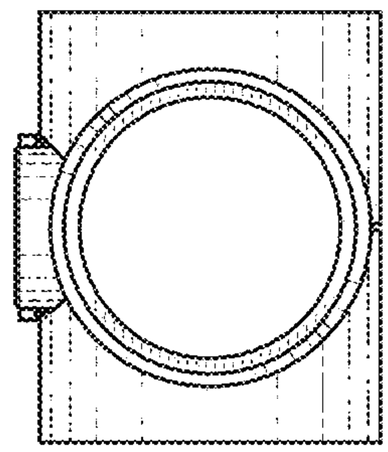

FIG. 21

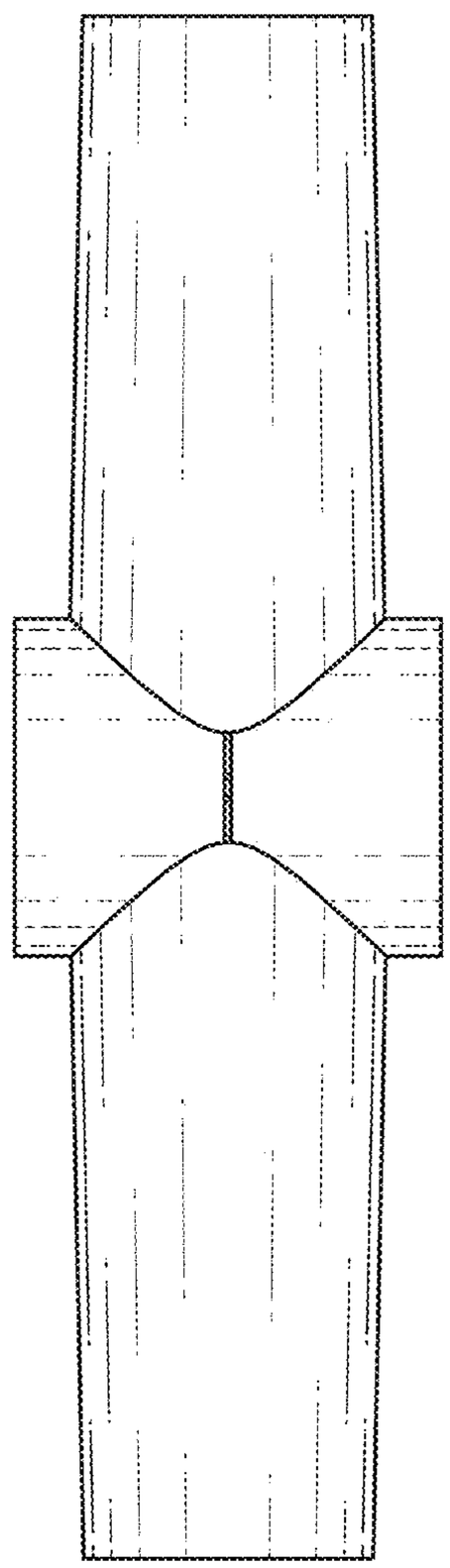

FIG. 20

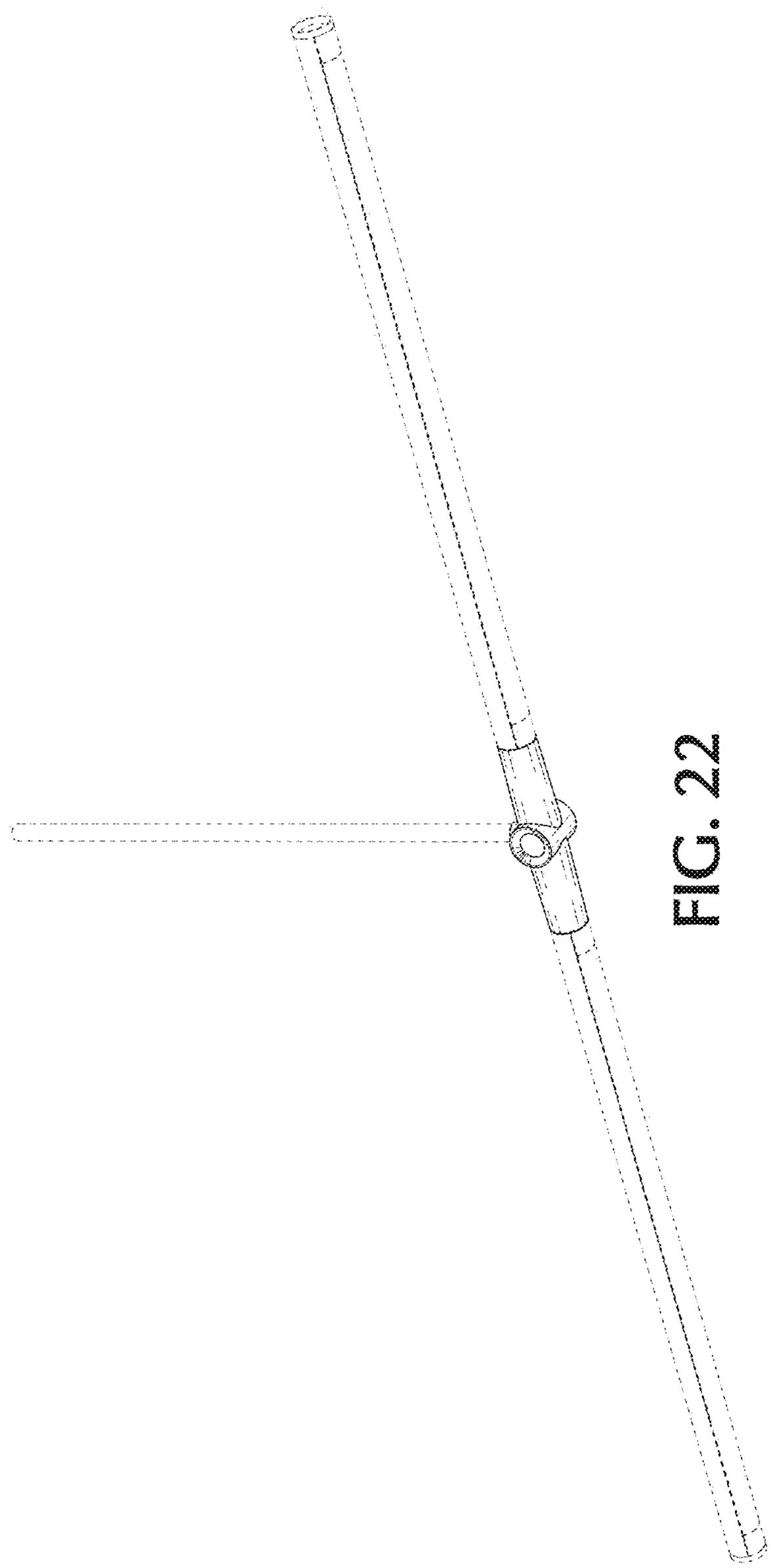

FIG. 22

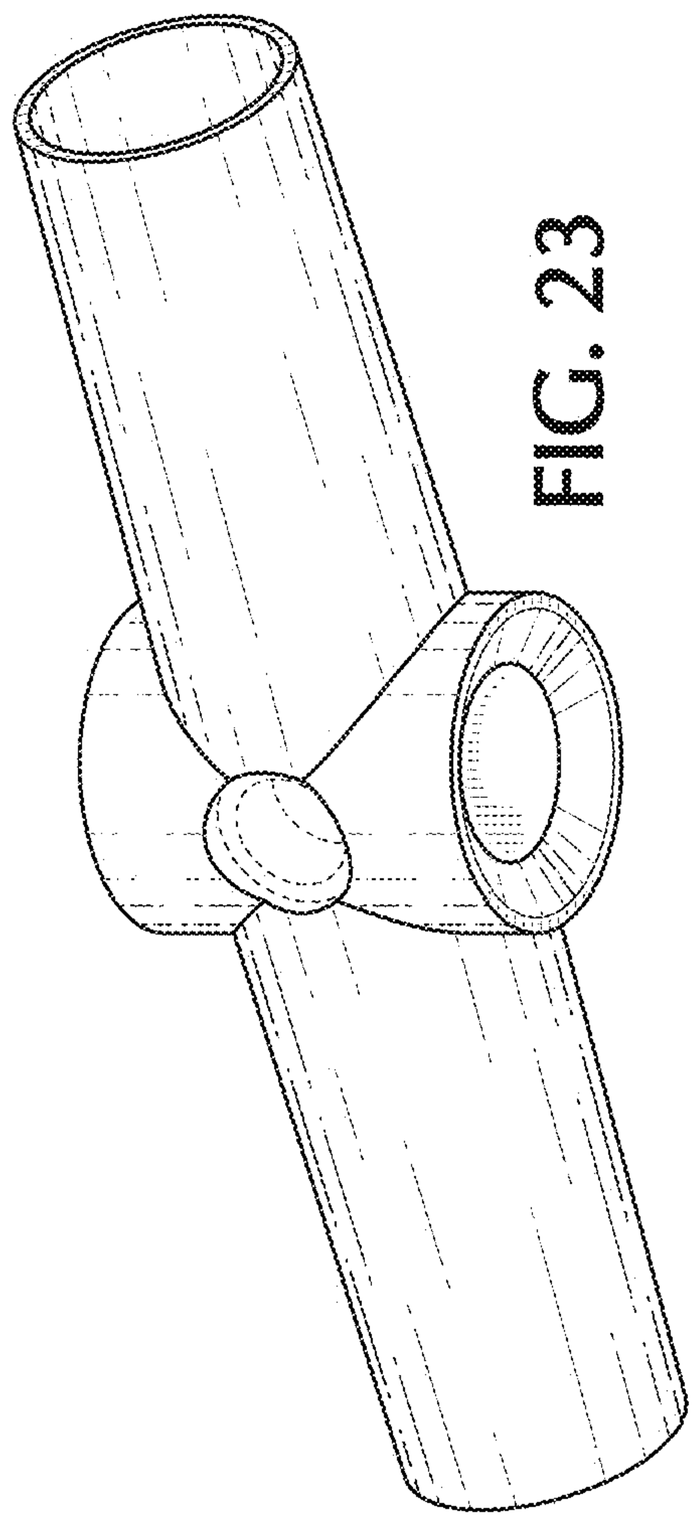

FIG. 23

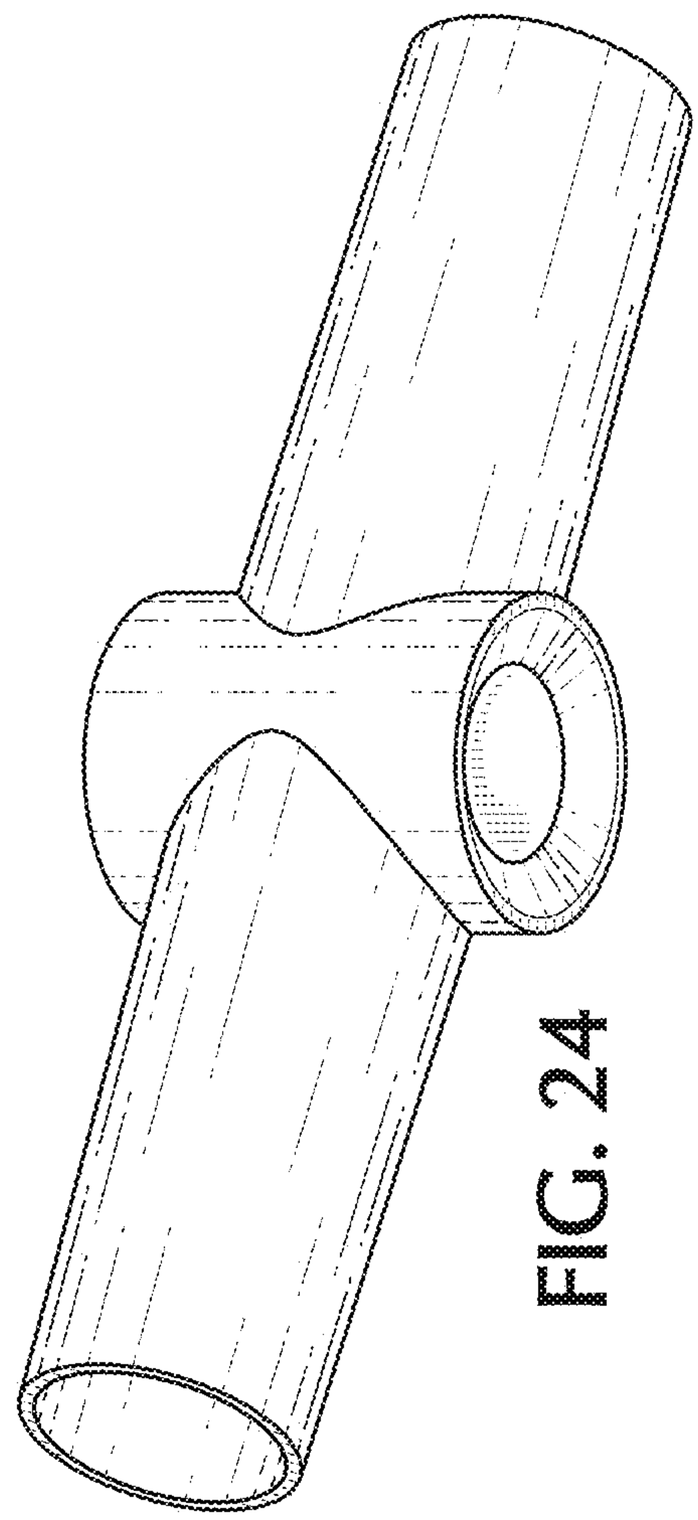

FIG. 24

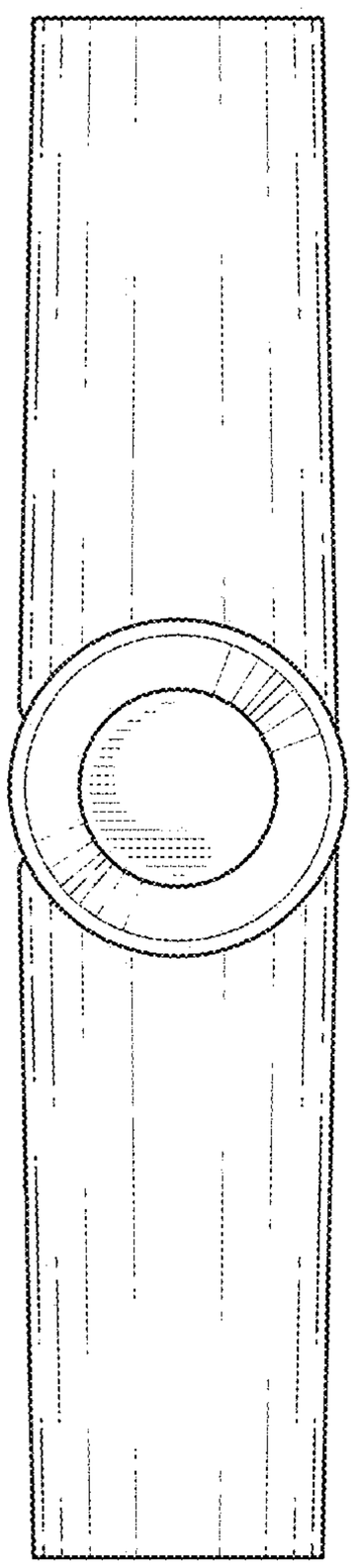

FIG. 25

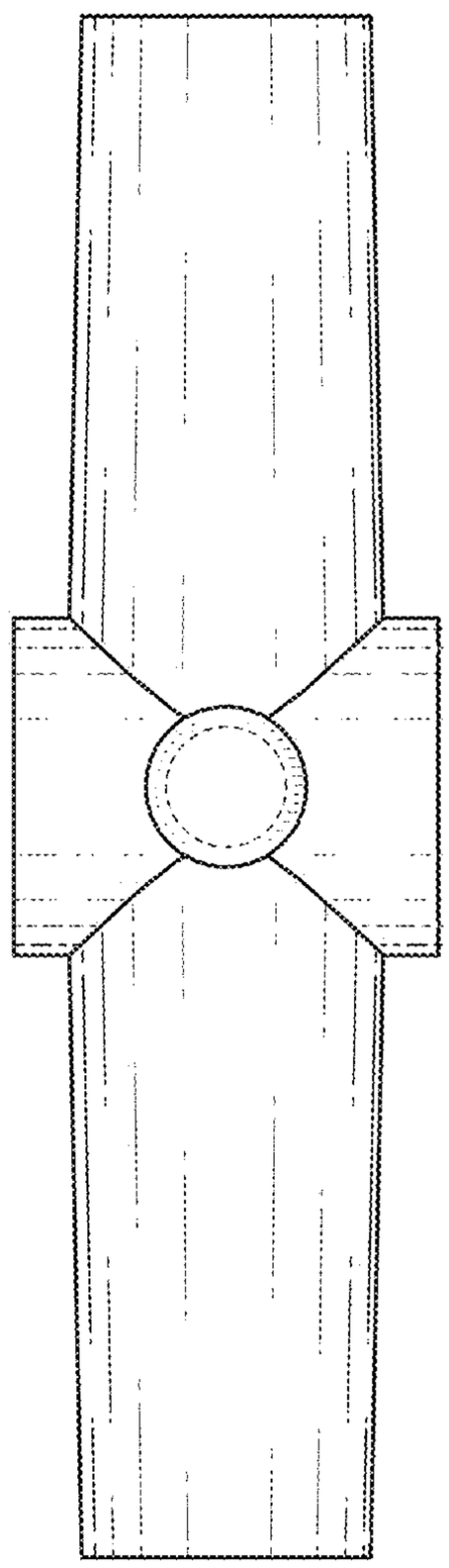

FIG. 26

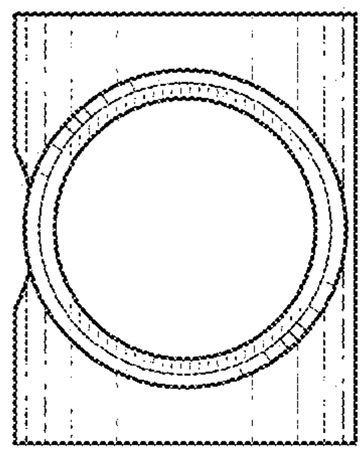

FIG. 28

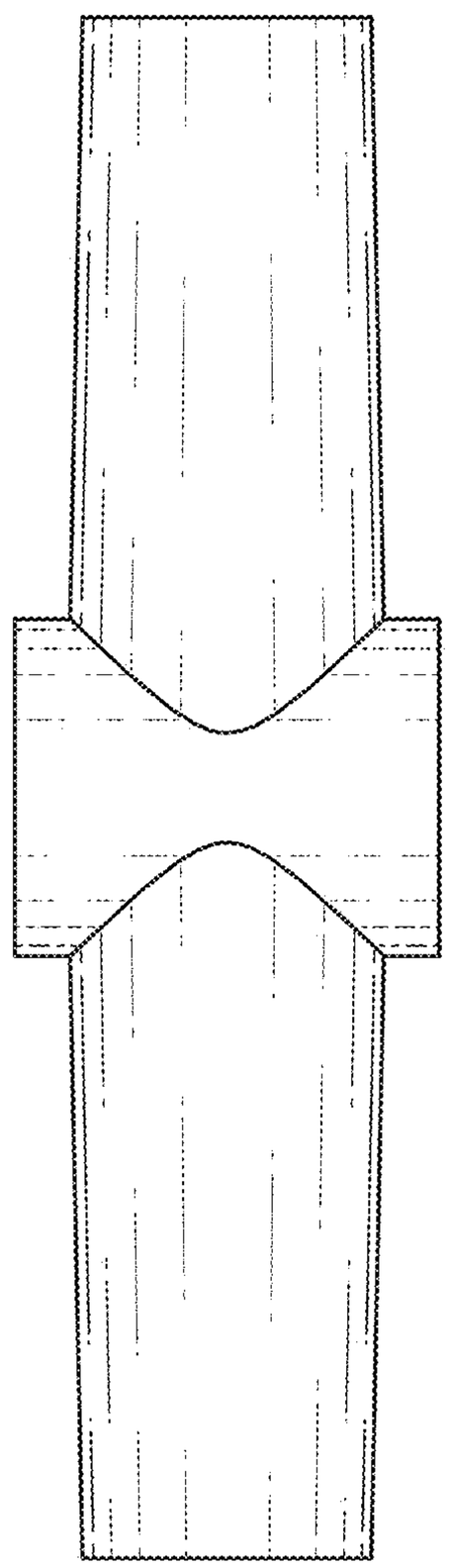

FIG. 27