US00D903733S

(12) United States Design Patent

Baumann et al.

(10) Patent No.: US D903,733 S
(45) Date of Patent: ** *Dec. 1, 2020

(54) **AXIAL TURBINE HOUSING FOR A ROTARY ATOMIZER FOR A PAINTING ROBOT**

(71) Applicant: **Dürr Systems AG**, Bietigheim-Bissingen (DE)

(72) Inventors: **Michael Baumann**, Flein (DE); **Frank Herre**, Oberriexingen (DE); **Marcus Frey**, Weil der Stadt (DE); **Bernhard Seiz**, Lauffen (DE); **Harry Krumma**, Bönnigheim (DE); **Timo Beyl**, Besigheim (DE); **Jürg Schiffmann**, Bern (SZ); **Stephan Scholl**, Herzogenbuchsee (SZ)

(73) Assignee: **Dürr Systems AG**, Bietigheim-Bissingen (DE)

(*) Notice: This patent is subject to a terminal disclaimer.

(**) Term: **15 Years**

(21) Appl. No.: **29/651,105**

(22) Filed: **Dec. 17, 2019**

Related U.S. Application Data

(63) Continuation of application No. 29/593,815, filed on Feb. 13, 2017, now Pat. No. Des. 873,874, which is (Continued)

(30) **Foreign Application Priority Data**

Mar. 31, 2010 (DE) 10 2010 013 551

(51) **LOC (12) Cl.** **15-09**

(52) **U.S. Cl.**
USPC **D15/138**

(58) **Field of Classification Search**
USPC D15/122, 138, 199
(Continued)

(56) **References Cited**

U.S. PATENT DOCUMENTS

2,640,679 A 6/1953 Wheatley et al.
3,709,630 A 1/1973 Pohl et al.
(Continued)

FOREIGN PATENT DOCUMENTS

DE 459519 C 5/1928
DE 560836 C 10/1932
(Continued)

OTHER PUBLICATIONS

Notification of Reason for Rejection from the Japan Patent Office for Japanese Patent Application No. 2013-501659, dated Sep. 24, 2015 (English translation; 9 pages).
(Continued)

Primary Examiner — Patricia A Palasik
(74) *Attorney, Agent, or Firm* — Bejin Bieneman PLC

(57) **CLAIM**

We claim the ornamental design for an axial turbine housing for a rotary atomizer for a painting robot, as shown and described.

DESCRIPTION

FIG. **1** is a side perspective view of an axial turbine housing for a rotary atomizer for a painting robot, in which the ornamental design of the front and sides of the axial turbine housing is symmetric about the axis thereof; and
FIG. **2** is a rear perspective view of the axial turbine housing of FIG. **1**.
FIG. **3** is a side view of the axial turbine housing of FIG. **1**; and,
FIG. **4** is a rear plan view of the axial turbine housing of FIG. **1**.

1 Claim, 4 Drawing Sheets

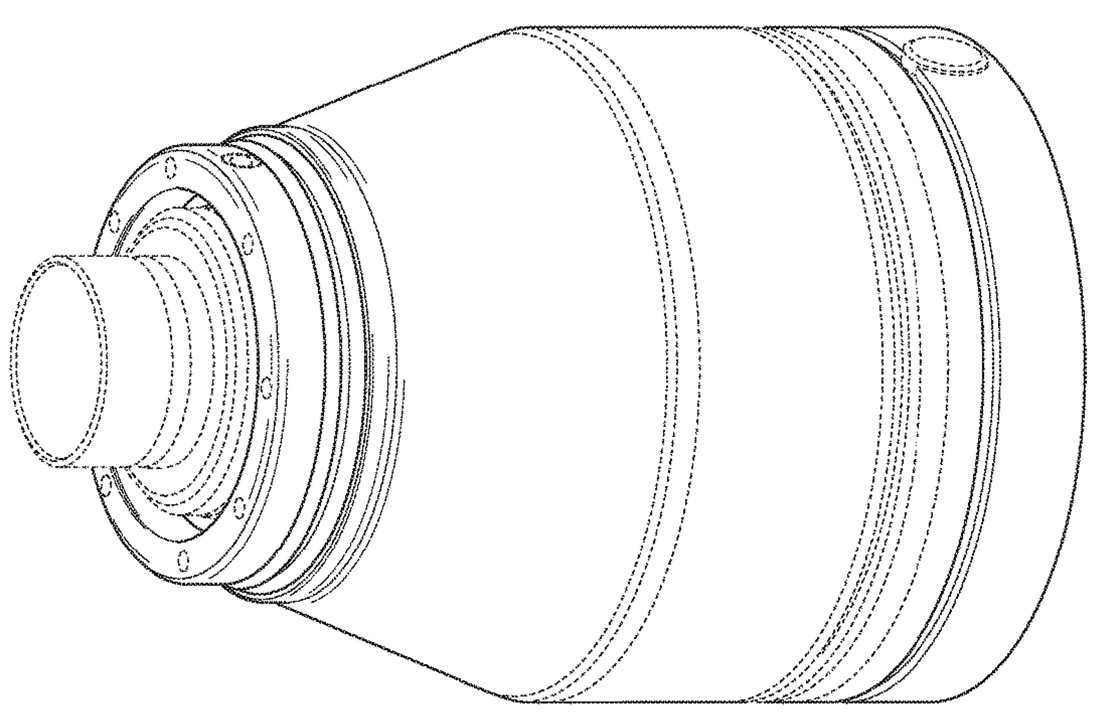

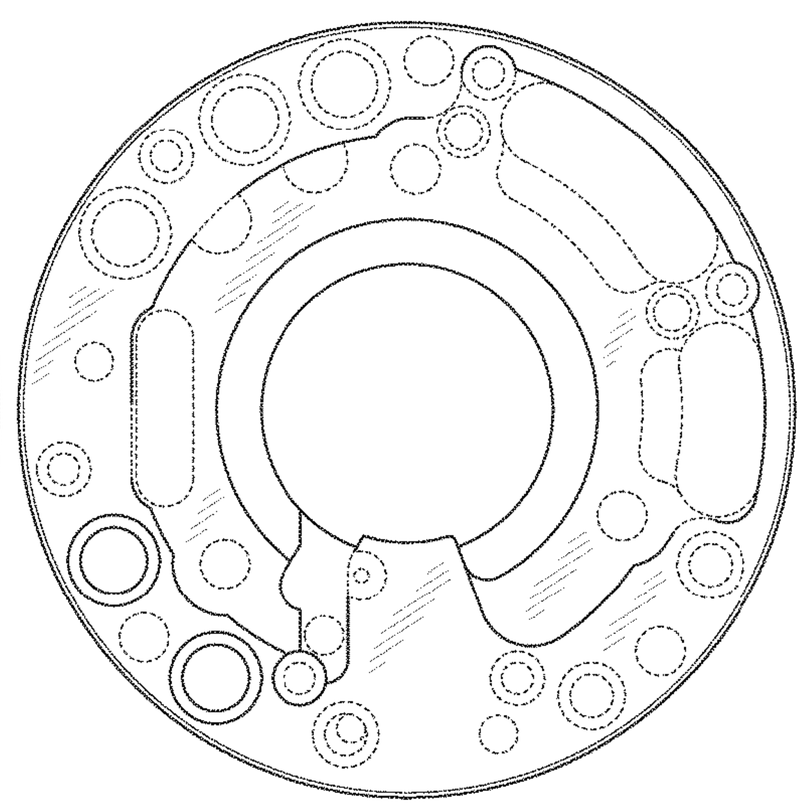

Related U.S. Application Data

a continuation of application No. 13/638,193, filed on Sep. 28, 2012, now Pat. No. 9,604,232.

(58) **Field of Classification Search**
CPC ... B05B 3/1035; B05B 3/1042; B05B 3/1092; B05B 5/0407; B05B 5/0415
See application file for complete search history.

(56) **References Cited**

U.S. PATENT DOCUMENTS

4,361,287	A	11/1982	Morishita et al.	
4,555,058	A	11/1985	Weinstein	
4,589,597	A	5/1986	Robisch	
4,896,834	A	1/1990	Coeling	
5,697,559	A	12/1997	Davis	
5,803,372	A	9/1998	Weinstein	
5,853,126	A	12/1998	Alexander	
5,922,131	A	7/1999	Haas	
6,056,215	A	5/2000	Hansinger et al.	
6,811,094	B2	11/2004	Kon	
7,017,835	B2	3/2006	Vetter	
7,080,794	B2	7/2006	Baumann	
7,131,601	B2	11/2006	Nolte et al.	
7,322,793	B2	1/2008	Baumann et al.	
D636,842	S	4/2011	Nolte	
D636,843	S	4/2011	Nolte	
D636,844	S	4/2011	Herre	
D643,510	S	8/2011	Nolte	
9,375,734	B1	6/2016	van der Steur	
9,604,232	B2	3/2017	Baumann	
D873,874	S *	1/2020	Baumann	D15/138

FOREIGN PATENT DOCUMENTS

DE	1140945	B	12/1962
DE	38045	A1	5/1965
DE	1954130	B2	8/1972
DE	3151929	A1	7/1983
DE	3317695	A1	11/1984
DE	19816648	A1	11/1998
DE	10233199	A1	2/2004
DE	102006053921	A1	5/2008
DE	102009034645	A1	1/2011
EP	0037645	B2	2/1988
EP	0508771	A1	10/1992
EP	0837223	A2	4/1998
EP	1384514	A2	1/2004
GB	2097291	A	11/1982
JP	S56141864	A	11/1981
JP	S57169455	U	10/1982
JP	S58-124254	U	8/1983
JP	S6014960	A	1/1985
JP	S60-189351	U	12/1985
JP	H07185405	A	7/1995
JP	H10-212901	A	8/1998
JP	H10-305241	A	11/1998
JP	2004321844	A	11/2004
JP	2008-104903	A	5/2008
JP	S6097683	B2	3/2017

OTHER PUBLICATIONS

International Search Report for PCT/EP2011/001038 dated Jun. 17, 2011.

Braunling, Willy JG: Flugzeugtriebwerke, Springer Verlag. Gleichdruckturbine Seite 653 (3. Aufl. 2009); http://en.wikipedia.org/w/index.php?title=blanaced_turbine&oldid=164814892; Apr. 22, 2017 (4 pages; with English translation).

Adolph, Max (1959): Einfuhrung in die Stromungsmaschinen. Turbinen, Kreiselpumpen, und Verdichte: Berlin: Springer Verlag (Auszug).

Kauder, Knut: Stromungslehre-Teil II—Stromungsmaschinen. Grundlagen der Turbinen, Kompressoren und Kreiselpumpen. Universitat Dortmund: Vorlesungsmanuskript (Auszug-Kapitel 4).

* cited by examiner

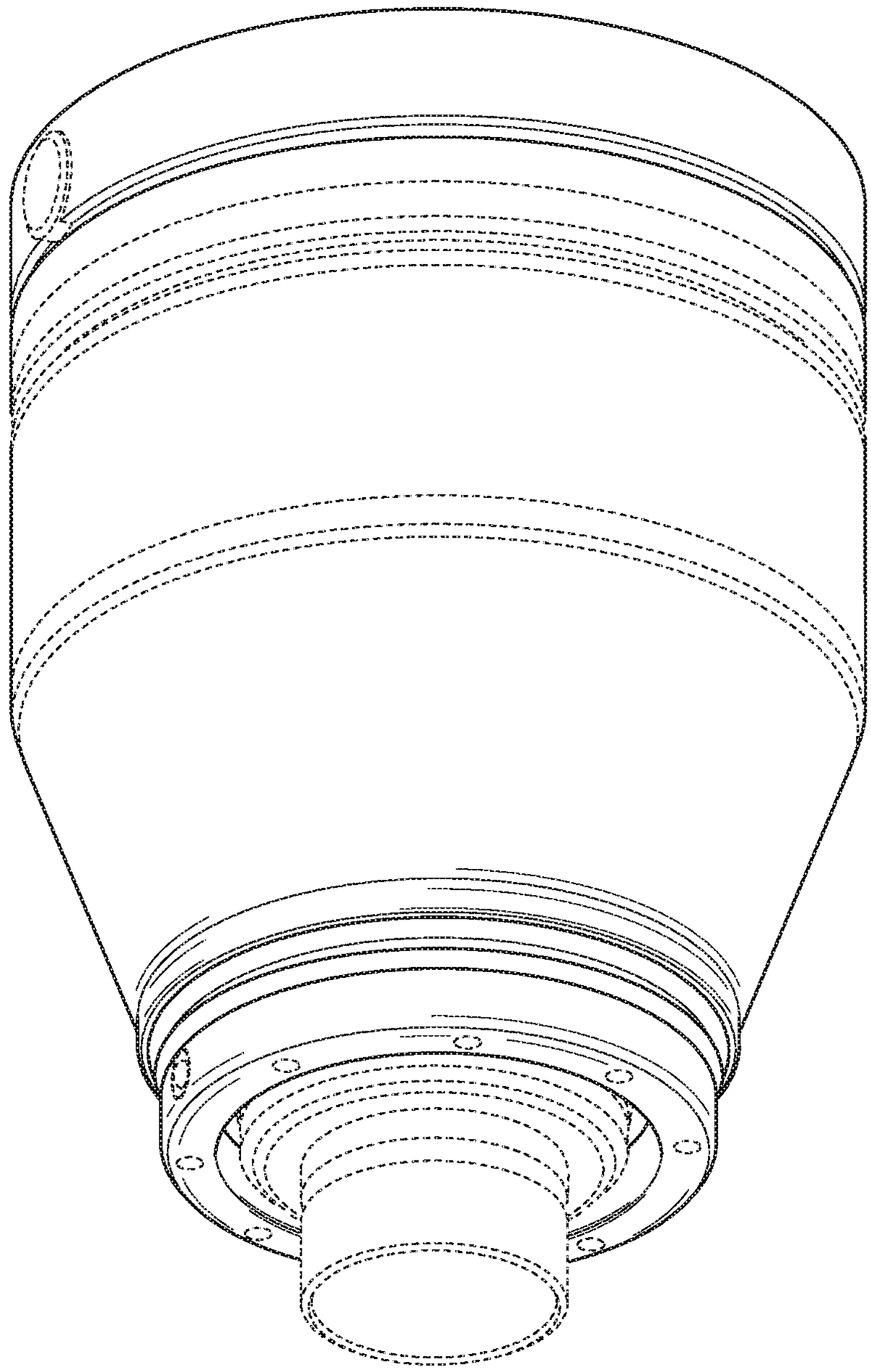

FIG. 1

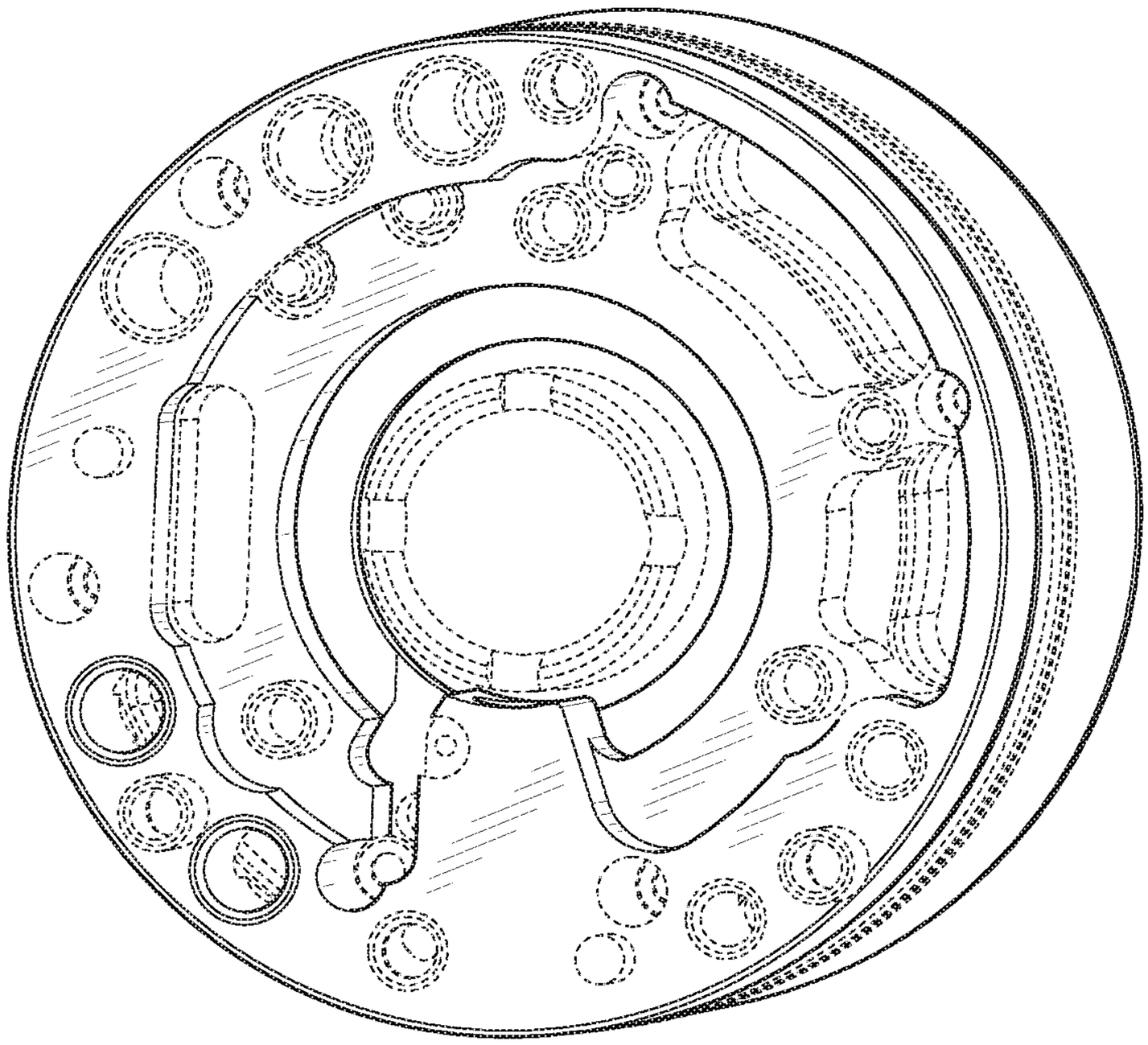

FIG. 2

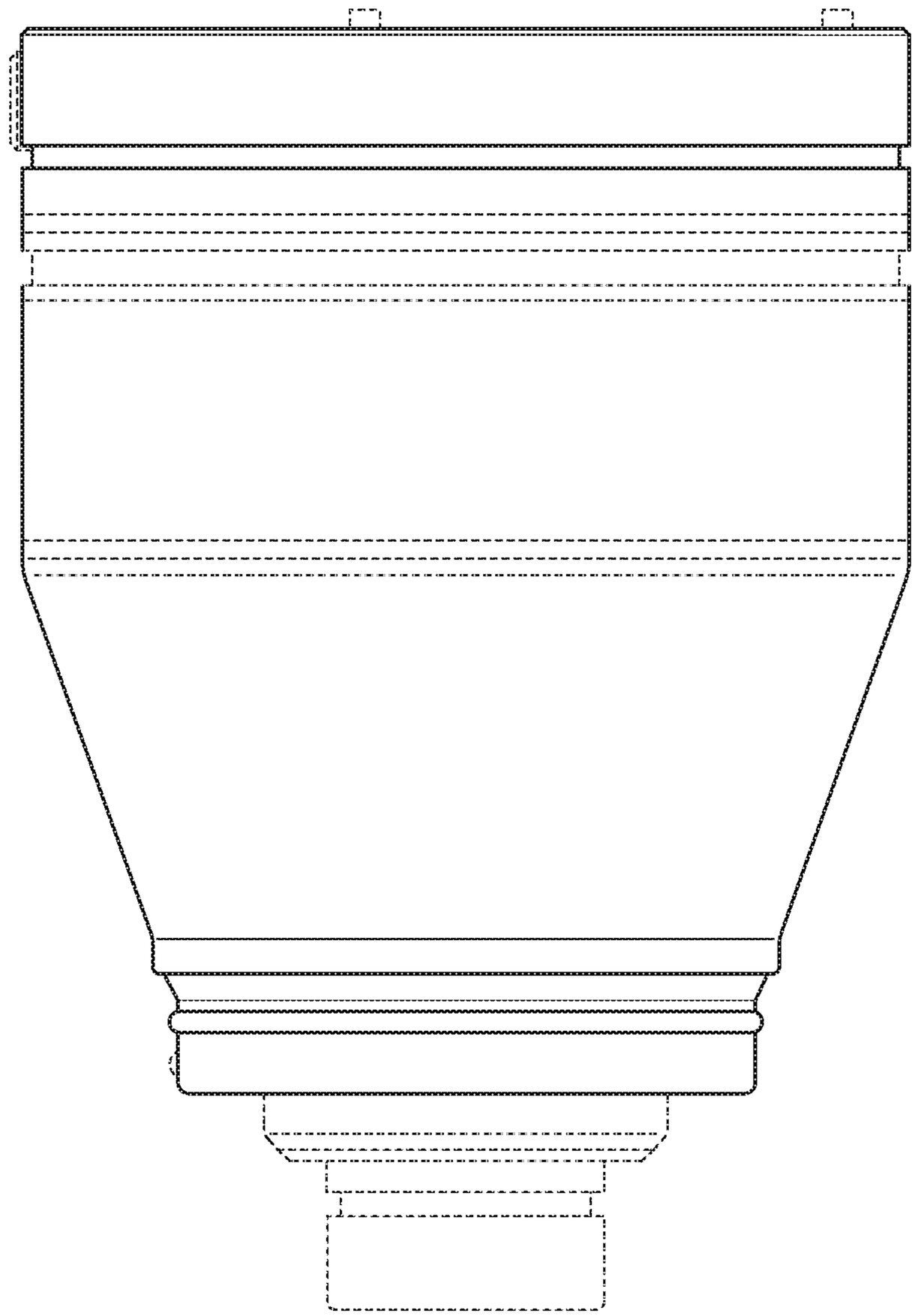

FIG. 3

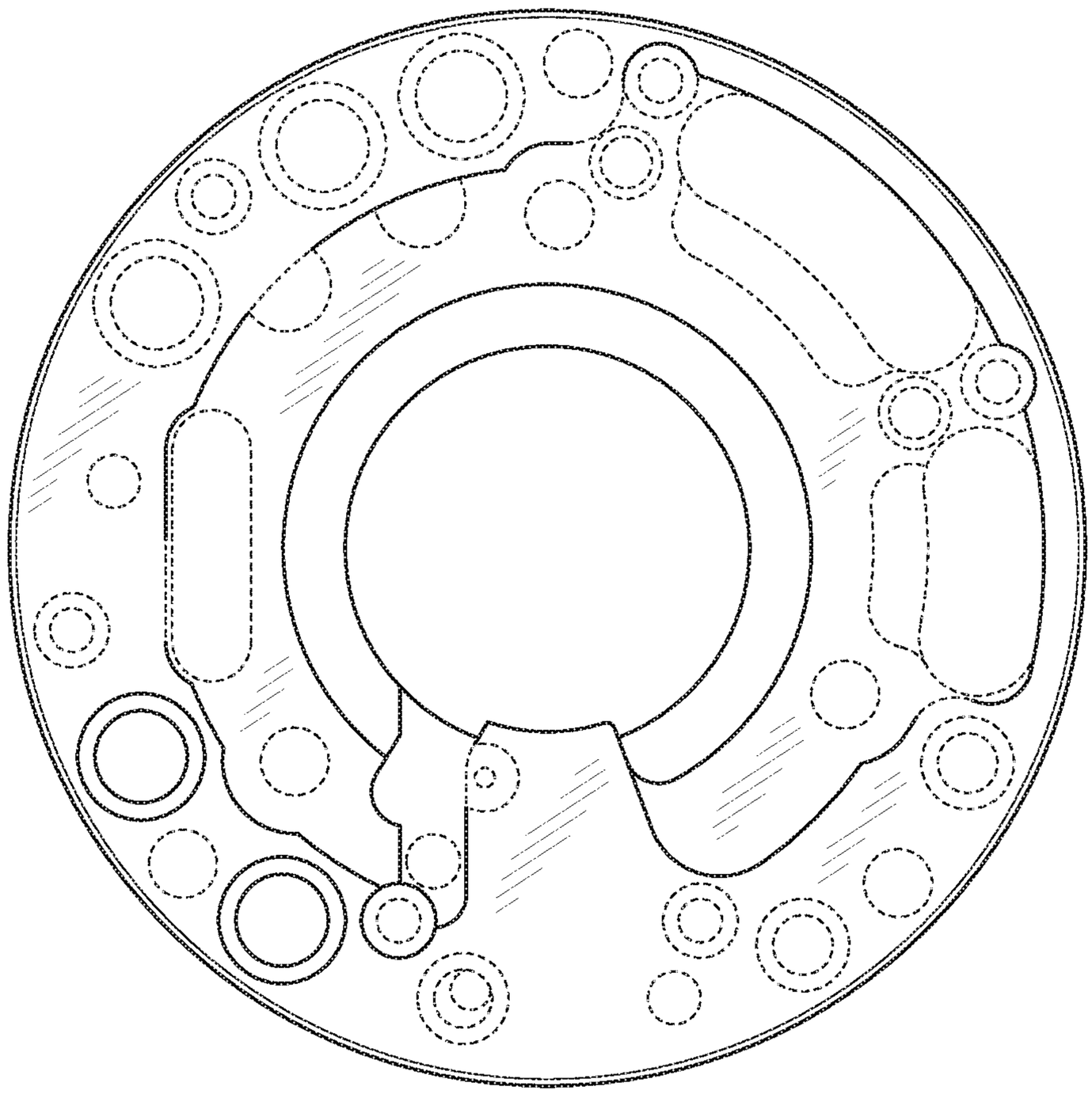

FIG. 4